C. H. RITTER.

LARD EXTRACTOR.

APPLICATION FILED SEPT. 7, 1909.

971,408. Patented Sept. 27, 1910.

2 SHEETS—SHEET 1.

Fig. 1.

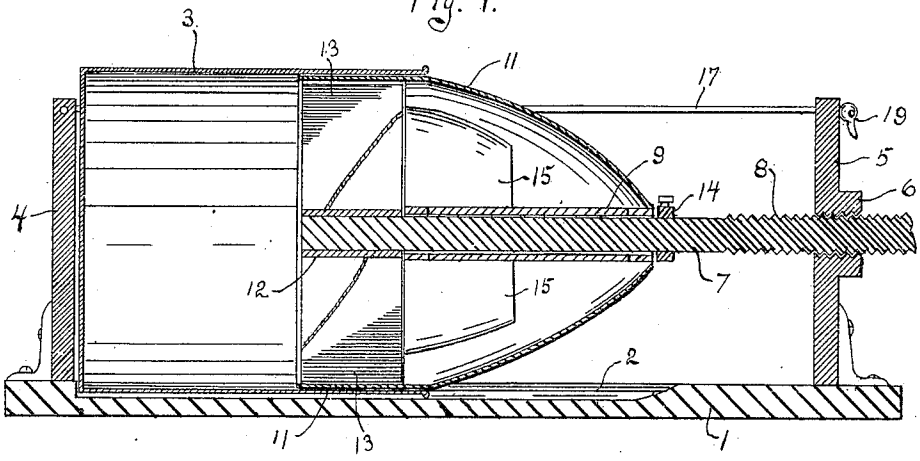

Fig. 2.

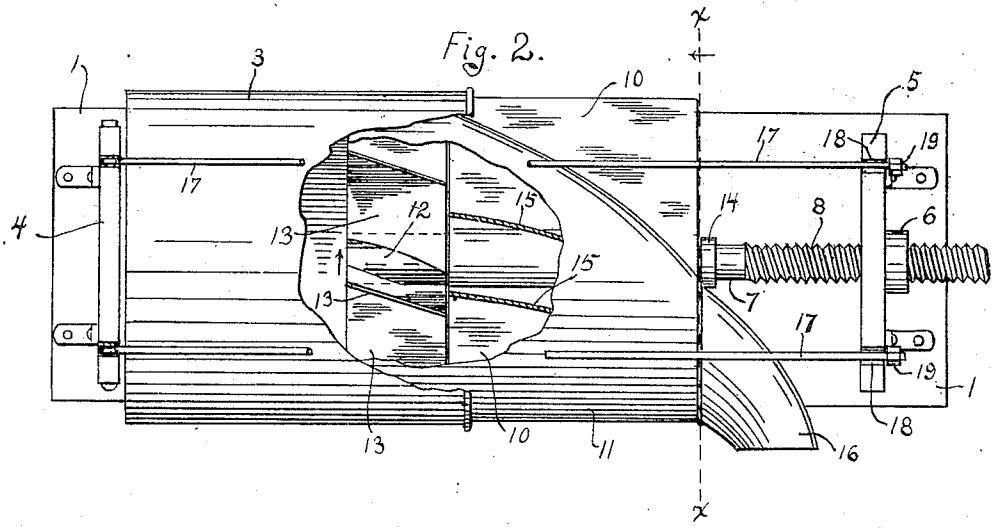

Witnesses.

C. A. Stults.

L. Weaver

Inventor.

Christopher H. Ritter,

By Walter N. Haskell.

His Attorney.

THE NORRIS PETERS CO., WASHINGTON, D. C.

C. H. RITTER.

LARD EXTRACTOR.

APPLICATION FILED SEPT. 7, 1909.

971,408. Patented Sept. 27, 1910.

2 SHEETS—SHEET 2.

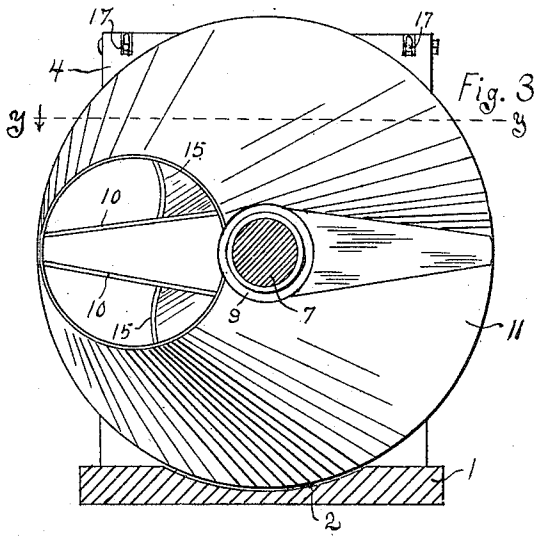

Fig. 3.

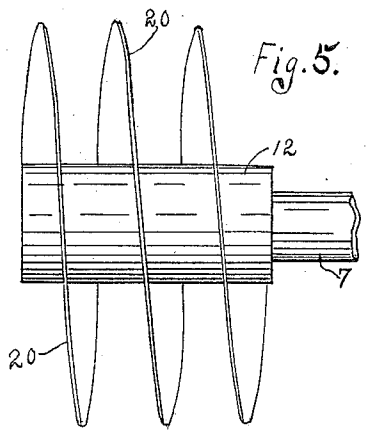

Fig. 5.

Fig. 4.

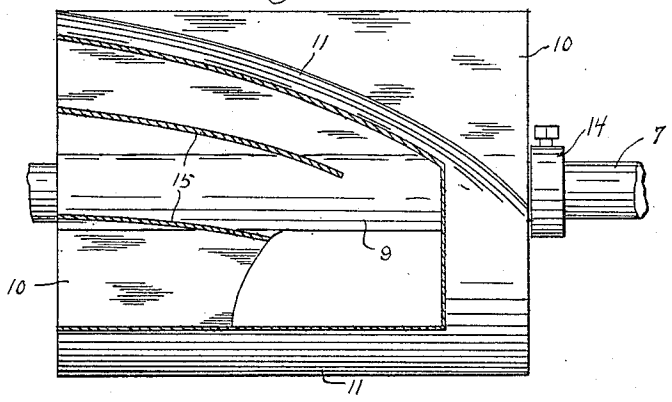

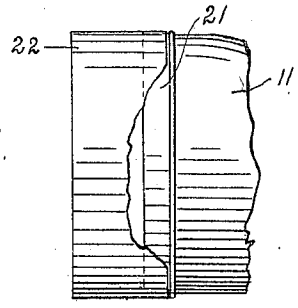

Fig. 6.

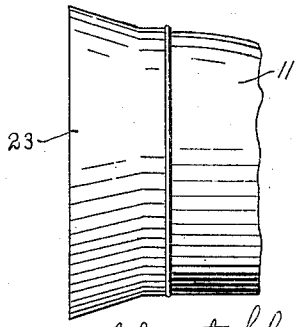

Fig. 7.

Witnesses

C. A. Stutts

J. L. Weaver

Inventor

Christopher H. Ritter

By Walter N. Haskell.

his Attorney

THE NORRIS PETERS CO., WASHINGTON, D. C.

UNITED STATES PATENT OFFICE.

CHRISTOPHER H. RITTER, OF DIXON, ILLINOIS.

LARD-EXTRACTOR.

971,408. Specification of Letters Patent. Patented Sept. 27, 1910.

Application filed September 7, 1909. Serial No. 516,615.

To all whom it may concern:

Be it known that I, CHRISTOPHER H. RITTER, a citizen of the United States, residing at Dixon, in the county of Lee and State of Illinois, have invented certain new and useful Improvements in Lard-Extractors, of which the following is a specification.

My invention has reference to lard extractors, and is designed to aid in the removal of lard and similar substances from cans or tubs where the same is to be handled in considerable quantities. The removal of lard and other semi-solid materials from the receptacle by means of a ladle or other hand process is a slow and laborious operation, and is far from satisfactory for the reason that a portion of the contents of the can usually remains in the bottom thereof. By the use of my machine every particle of the lard can be removed.

In the accompanying drawings; Figure 1 is a vertical longitudinal section of my invention, when in use. Fig. 2 is a plan view thereof, with some of the parts broken away to more clearly show the interior of the machine. Fig. 3 is an end view of the casing 11 in the line x—x of Fig. 2. Fig. 4 is a horizontal section, in the line y—y of Fig. 3. Fig. 5 is a modified form of the cutting head. Figs. 6 and 7 show modified constructions of the casing 11.

Similar numbers refer to similar parts throughout the several figures.

1 represents a base, provided in its upper face with a concave recess 2, adapted to hold the usual lard can 3 in a horizontal position. In rear of the can 3 is a bracket 4, fixed to the base 1, and at the opposite end of such base is secured a support 5, having a bearing 6 in which is supported a horizontal shaft 7. The shaft 7 is provided with a threaded portion 8, the threads of which are engaged by corresponding threads in the bearing 6. Such shaft can be rotated by a crank or other suitable means on the outer end thereof. (Not shown.) Loosely mounted on the shaft 7 is a sleeve 9 from which a pair of plates 10 extend outwardly in a substantially horizontal plane. Supported by the plates 10 is a casing 11, cylindrical at one of its ends, and of modified funnel shape at the other, with the small end of the funnel at one side of the shaft 7.

On the inner end of the shaft 7 is a cutting head, comprising a sleeve 12, fixed on such shaft, and a plurality of cutting blades 13, secured on said sleeve, and extending diagonally thereof, throughout its entire length. The blades 13 are inclosed within the cylindrical part of the casing 11, and extend outwardly nearly to such casing. The sleeve 9 is held from movement longitudinally of the shaft 7 by the sleeve 12 at one end, and by a collar 14, fixed to the shaft 7, at the opposite end.

By means of the plates 10 the funnel-shaped portion of the casing 11 is divided into two passages, each of which is provided with one or more longitudinal partitions 15, extending from a point adjacent to the blades 13 partially through the cylinder. The diameter of the casing 11 at the inner end thereof is slightly less than that of the can 3, so that the same can pass readily into the can.

Upon the shaft 7 being suitably rotated the casing 11 is gradually forced into the can 3, the rotary movement of the blades 13 operates to slowly cut away successive layers of the lard and conduct it into the casing 11, through which it is forced by the continued movement of the cutting head. The inner edges of the plates 10 and of the partitions 15 act as scrapers, to aid in removing the material from the adjacent edges of the blades 13. The plates 10 are partly cut away in the casing 11, as shown in Fig. 4, permitting the contents of the can to mingle in the small end of such casing, from which it is discharged at one side of the machine through a spout 16, attached to the small end of the casing.

The can 3 is held in place by means of a pair of rods 17, pivotally supported at one end in the bracket 4, and removably secured at their opposite ends in recesses 18 in the support 5, by means of eccentric levers 19, fixed to the free ends of the rods 17, and engaging the outer face of the support 5.

To operate the machine the shaft 7 is actuated to move the casing 11 to a point farthest from the bracket 4, permitting the can of lard to be placed in position. The rods 17 are then fastened in place, and the shaft 7 operated to force the casing 11 into the can, and remove the contents thereof, as hereinbefore described.

In Fig. 5 is shown a modified form of the cutting head, wherein the blades 13 are replaced by a spiral blade 20, the rotation of

which operates to force the lard through the casing 11, similarly to the action of the blades 13.

Fig. 6 shows the casing 11 provided with a rim 21 and removable cylindrical section 22, which can be replaced by a flaring section 23. (Fig. 7.) By this means the device can be accommodated to cans having a slightly greater diameter.

While the preferred method of operation has been herein set forth as being carried on with the can in a horizontal position, the removal of the contents of the can can be accomplished with the same in a vertical position, with the operating mechanism working downwardly into the same.

Changes can also be made in the form of the machine without departing from the spirit of the invention.

What I claim as my invention, and desire to secure by Letters Patent of the United States, is—

1. A device of the class named, comprising a casing, adapted to be introduced into a can containing a semi-solid substance; a cutting head in the inner end of such casing, adapted to assist in conducting the contents of the can into such casing; means for gradually forcing the casing into such can; and means for discharging the contents through said casing and at the side of the machine.

2. In a device of the class named, a base; means for securing a lard can in place thereon; a casing, longitudinally movable on said base; a cutting head in the inner end of said casing; partitions extending longitudinally of said casing; means for moving said casing longitudinally of said base, and means for discharging the contents of the can at the side of the casing.

3. A device of the class named, comprising a base; means for securing a lard can thereon; a shaft, rotatably mounted on said base; a casing, mounted on said shaft, so as to move longitudinally therewith; a cutting head mounted on the inner end of said shaft; means for giving said shaft a gradual longitudinal movement during the rotation thereof; and means for conducting the contents of said can through such casing to one side of the machine.

In testimony whereof I affix my signature in presence of two witnesses.

CHRISTOPHER H. RITTER.

Witnesses:
JOHN H. EWEN,
C. H. STETELEY.