March 22, 1938. F. C. WAPPLER 2,112,056

BLUNTED ENDOSCOPIC INSTRUMENT

Filed Sept. 19, 1934

Fig. 1

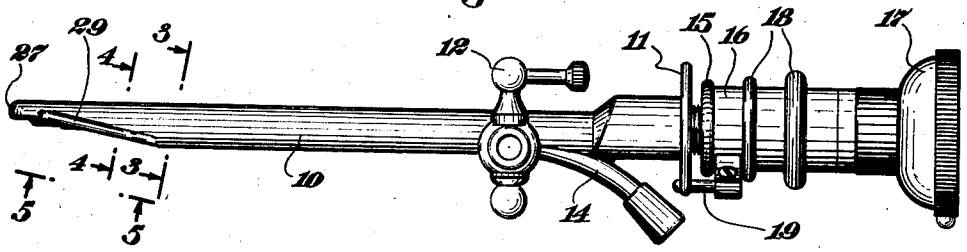

Fig. 2

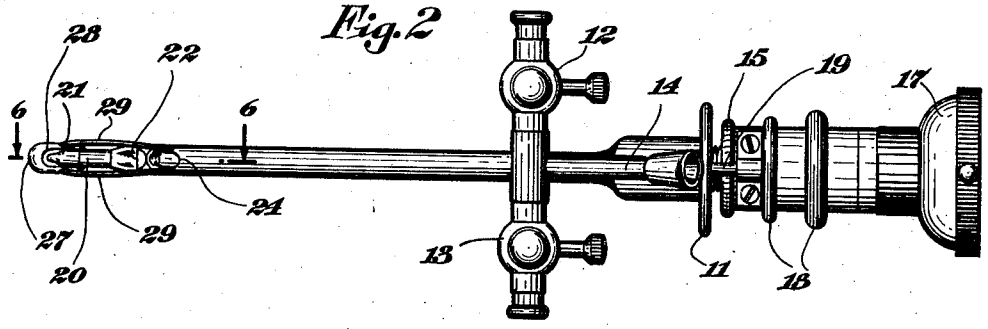

Fig. 3

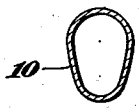

Fig. 5

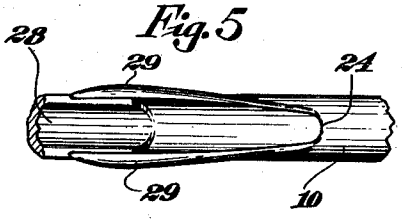

Fig. 4

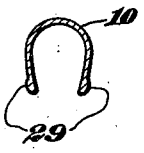

Fig. 6

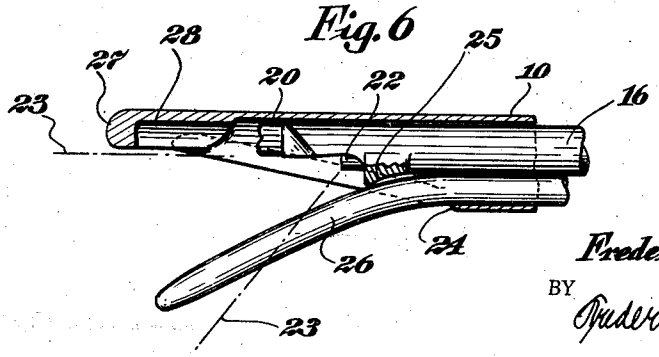

INVENTOR,
Frederick Charles Wappler;
BY
Frederick Greitenfeld
ATTORNEY.

Patented Mar. 22, 1938 2,112,056

UNITED STATES PATENT OFFICE

2,112,056

BLUNTED ENDOSCOPIC INSTRUMENT

Frederick Charles Wappler, New York, N. Y.

Application September 19, 1934, Serial No. 744,612

2 Claims. (Cl. 128—7)

My present invention relates generally to surgical instruments, and has particular reference to a new and improved endoscopic instrument.

While I have herein illustrated my invention in the form of an endoscope designed primarily for inspection and treatment of the vaginal vault and cervix of small girls, it will be understood that the invention is applicable broadly to any type of endoscopic instrument designed for insertion into a constricted body cavity.

One of the main objects is to provide a compact and especially small device whose insertion into small passages is capable of accomplishment with a maximum amount of ease and safety.

The instrument is of the type which consists, essentially, of an endoscopic tube having an open forward end cut along a diagonal, thereby defining an elongated fenestra arranged obliquely with respect to the tube axis. One of the primary objects of the present invention is to provide an improved means for blunting this type of endoscopic tube so that it may be inserted into a body passage without an obturator, yet with safety.

The instrument includes a telescope which commands a forwardly oblique field of vision out of the fenestra; and since the instrument is rather small to start with, and is primarily intended for insertion into narrow cavities, it is essential that the illumination of the field be maintained at a maximum and that the field of vision be as large as possible. It is also highly desirable that the external calibre of the instrument be as small as possible. One of the desirable objects which my present invention achieves consists in the provision of a means for effectually blunting the instrument in a manner which does not reduce the lumen of the tube or increase the calibre of the instrument.

Briefly, the endoscopic tube of the present invention has the forward end of its longest wall rounded and inwardly thickened; and on each of the side edges of the oblique fenestra I provide a ridge which aids in blunting the tube. In accordance with my invention, these ridges are external, i. e., on the outer surface of the tube, whereby the lumen remains unimpaired; and the ridges not only taper toward the rear but terminate short of the rear edge of the fenestra, whereby the calibre of the instrument is not increased. The blunting of the forward end of the longest wall, per se, is disclosed in Wappler Patent Number 1,703,216, issued February 26, 1929.

In accordance with the general object of compactness, the present instrument is also provided with an efficient and simplified means for guiding a catheter, electrode, or similar tool through the tube so that its forward end may be projected into the illuminated field of vision.

I achieve the foregoing objects, and such other objects as may hereinafter appear or be pointed out, in the manner illustratively exemplified in the accompanying drawing, wherein—

Figure 1 is a side view of an instrument embodying the features of my present invention;

Figure 2 is a bottom view of the same;

Figure 3 is a cross-sectional view through the tube alone, taken substantially along the line 3—3 of Figure 1;

Figure 4 is a view similar to Figure 3, taken substantially along the line 4—4 of Figure 1;

Figure 5 is an enlarged view taken along the direction 5—5 of Figure 1, showing the construction of the tube itself; and

Figure 6 is an enlarged cross-sectional view taken substantially along the line 6—6 of Figure 2.

The endoscopic tube 10 is substantially oval in cross-section, as indicated most clearly in Figure 3, and is associated at its rear end with a collar 11 and with the irrigation petcocks 12 and 13. The wall of the tube merges at its rear end with the curved cathether guide 14 through which a catheter, electrode, or similar instrumentality may be inserted.

A threaded bearing member 15 is removably screw-threaded into the collar 11 and is provided with an opening through which the body portion of a telescope 16 may be removably inserted. The telescope is preferably of the character illustrated and described in Patent Number 1,680,491, dated August 14, 1928, the rear end carrying the usual eyepiece 17, the insulation rings 18, and conductive areas to which electrical connections may be made. A pin 19 may be conveniently provided for engagement with an opening in the collar 11, so that the proper positioning of the telescope will be assured when it is inserted into the tube 10.

The forward end of the tube 10 is cut on a diagonal, thereby defining an oblique fenestra which is elongated and which lies in a plane forming an angle of about 20° with the tube axis. The telescope is adapted to position itself along the long wall of the tube 10, and terminates in a lamp extension 20 carrying a miniature lamp bulb 21. Behind the extension 20 an objective lens 22 is mounted, commanding a forwardly oblique field of vision whose boundaries are approximately designated by the dot-and-dash lines 23 of Figure 6.

On the inner surface of the telescope, just behind the objective 22 and adjacent to the rear edge 24 of the fenestra, I provide an oblique fixed projection 25 whose function it is to deflect outwardly a catheter 26 or similar tool that is inserted along the short wall of the tube 10 by advancing it forwardly into the catheter guide 14. The manner in which this tool extends along the short wall of the tube, and is deflected outwardly into the field of vision, is shown most clearly in Figure 6.

In accordance with my present invention, the forward end of the long wall of the tube is rounded and inwardly thickened, as indicated at 27, whereby the forward tip of the instrument is effectually blunted and rendered harmless. Without this thickening or blunting, the forward tip of an obliquely cut tube of the present character would be dangerously sharp and likely to cause injury during insertion of the instrument.

Preferably, the thickening 27 is provided on its inner surface with a longitudinal groove 28 adapted to accommodate the lamp 21 of the telescope. This grooveway is not absolutely essential, the essence of the arrangement lying primarily in the fact that the forward tip of the telescope is positioned behind, and thereby shielded by, the rounded thickened forward end of the tube.

The side edges of the oblique fenestra are also inherently dangerous, especially where the instrument is to be inserted into very small cavities having delicate membranes. To aid in blunting the instrument, the present invention provides external ridges 29 arranged, respectively, along the side edges of the fenestra. By arranging these ridges on the external surface of the tube, the lumen of the tube remains unimpaired, and the field of vision of the telescope is thereby as great as the size of the fenestra permits.

Each of the ridges 29 purposely tapers off toward the rear and terminates short of the rear edge 24 of the fenestra. This construction is illustrated most clearly in Figure 5, and the result is that the external calibre of the instrument remains unincreased. Thus, the calibre of the instrument is determined by the external cross-section along substantially the line 3—3 of Figure 1. The cavity into which the instrument is inserted must be stretched to a cross-sectional area sufficient to permit passage of this cross-section of the tube, shown most clearly in Figure 3. If the ridges 29 were extended around the rear edge 24 of the fenestra, or if they were not properly tapered off or terminated short of this rear edge, the calibre of the instrument would be increased. The reason why the external ridges 29 do not increase the calibre of the instrument, in accordance with the present construction, is most clearly depicted in Figure 4. It will be observed that the thickening of the tube adjacent to the side edges of the fenestra commences only at a point forwardly of the rear edge 24, as indicated in Figure 4, at which the obliqueness of the fenestra has already served to reduce the calibre of the instrument. Proceeding forwardly, the ridges 29 may become thicker and thicker, without increasing the calibre of the instrument, because the oblique arrangement of the fenestra causes a gradual reduction of the calibre toward the front.

While the present arrangement leaves the rear edge 24 unblunted, this is not of material importance, because this rear edge is not a dangerous edge in any event; and during the insertion of the instrument the lateral stretching of the cavity wall by the ridges 29 serves to guide the tissues smoothly and safely over the rear edge 24.

The illustrated embodiment of the present invention is extremely compact and efficient. Its working length is only 3¼ inches, and its calibre approximately 18 French. It has proven to be extremely convenient and effective in the examination of the entire female urethra, as well as of the anterior portion of the male urethra. When used in the vagina, a large rubber disc is preferably employed to seal the vaginal vault, whereby the proper distention by fluid may be accomplished.

The ease of manipulation of the present instrument is greatly enhanced by the fact that no obturator is necessary for introduction into the cavity. The entire instrument, with the telescope in place, and with catheter or electrode slightly retracted, may be introduced bodily with maximum safety.

The use of the instrument is especially indicated in cases of gonorrheal endocervicitis in infants and children, and it is useful generally in studying and treating various pathological conditions such as cysts, polyps, papillomatous masses, etc.

It will be understood, however, that the blunted arrangement of the present invention and the desirable results achieved thereby are not restricted to any specific type of instrument or to any particular uses.

In general, it will be understood that changes in the details, herein described and illustrated for the purpose of explaining the nature of my invention, may be made by those skilled in the art without departing from the spirit and scope of the invention as expressed in the appended claims. It is, therefore, intended that these details be interpreted as illustrative, and not in a limiting sense.

Having thus described my invention, and illustrated its use, what I claim as new and desire to secure by Letters Patent is—

1. A telescope for insertion into a fenestrated endoscopic tube, said telescope being provided with an objective which commands a forwardly oblique field of vision, and an oblique projection integrally formed on the telescope wall immediately behind said objective and adapted to deflect into said field a catheter inserted through said tube alongside of the telescope.

2. A blunted endoscopic instrument adapted to be safety inserted into a constricted body cavity without obturation of the instrument, comprising a tube with an open forward end defining a fenestra which lies in a plane oblique to the tube axis, a telescope arranged within the tube along the longest wall of the latter and commanding a forwardly oblique view out of said fenestra, an external ridge on the tube alongside of each of the side edges of the fenestra and terminating short of the rear edge of the fenestra, and an oblique projection on the inner surface of the telescope adjacent to the rear edge of the fenestra, said projection serving to deflect outwardly a catheter inserted through the tube along its shortest wall.

FREDERICK CHARLES WAPPLER.