(12) INTERNATIONAL APPLICATION PUBLISHED UNDER THE PATENT COOPERATION TREATY (PCT)

(19) World Intellectual Property Organization
International Bureau

(43) International Publication Date
6 February 2014 (06.02.2014)

WIPO | PCT

(10) International Publication Number
WO 2014/022040 A2

(51) International Patent Classification:
C23C 24/08 (2006.01)

(21) International Application Number:
PCT/US2013/048404

(22) International Filing Date:
28 June 2013 (28.06.2013)

(25) Filing Language: English

(26) Publication Language: English

(30) Priority Data:
13/561,445 30 July 2012 (30.07.2012) US

(71) Applicant: **GENERAL ELECTRIC COMPANY** [US/US]; 1 River Road, Schenectady, NY 12345 (US).

(72) Inventors: **DAS, Rupak**; 300 Garlington Road, Greenville, SC 29615 (US). **DELVAUX, John, McConnell**; 300 Garlington Road, Greenville, SC 29615 (US). **GARCIA-CRESPO, Andres, Jose**; 300 Garlington Road, Greenville, SC 29615 (US).

(74) Agents: **WINTER, Catherine, J.** et al.; General Electric Company, Global Patent Operation, 2 Corporate Drive, Suite 648, Shelton, CT 06484 (US).

(81) Designated States *(unless otherwise indicated, for every kind of national protection available)*: AE, AG, AL, AM, AO, AT, AU, AZ, BA, BB, BG, BH, BN, BR, BW, BY, BZ, CA, CH, CL, CN, CO, CR, CU, CZ, DE, DK, DM, DO, DZ, EC, EE, EG, ES, FI, GB, GD, GE, GH, GM, GT, HN, HR, HU, ID, IL, IN, IS, JP, KE, KG, KN, KP, KR, KZ, LA, LC, LK, LR, LS, LT, LU, LY, MA, MD, ME, MG, MK, MN, MW, MX, MY, MZ, NA, NG, NI, NO, NZ, OM, PA, PE, PG, PH, PL, PT, QA, RO, RS, RU, RW, SC, SD, SE, SG, SK, SL, SM, ST, SV, SY, TH, TJ, TM, TN, TR, TT, TZ, UA, UG, US, UZ, VC, VN, ZA, ZM, ZW.

(84) Designated States *(unless otherwise indicated, for every kind of regional protection available)*: ARIPO (BW, GH, GM, KE, LR, LS, MW, MZ, NA, RW, SD, SL, SZ, TZ, UG, ZM, ZW), Eurasian (AM, AZ, BY, KG, KZ, RU, TJ, TM), European (AL, AT, BE, BG, CH, CY, CZ, DE, DK, EE, ES, FI, FR, GB, GR, HR, HU, IE, IS, IT, LT, LU, LV, MC, MK, MT, NL, NO, PL, PT, RO, RS, SE, SI, SK, SM, TR), OAPI (BF, BJ, CF, CG, CI, CM, GA, GN, GQ, GW, KM, ML, MR, NE, SN, TD, TG).

Declarations under Rule 4.17:

— *as to applicant's entitlement to apply for and be granted a patent (Rule 4.17(ii))*

— *as to the applicant's entitlement to claim the priority of the earlier application (Rule 4.17(iii))*

[Continued on next page]

(54) Title: TURBINE REPAIR PROCESS, REPAIRED COATING, AND REPAIRED TURBINE COMPONENT

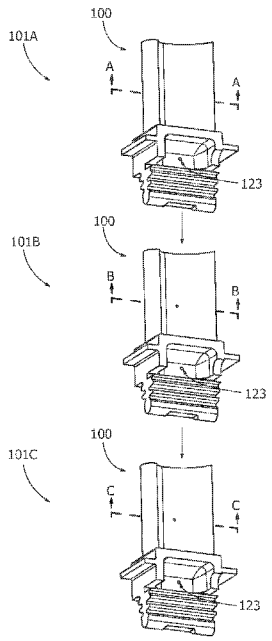

FIG. 1

(57) Abstract: A turbine repair process, a repaired coating, and a repaired turbine component are disclosed. The turbine repair process includes providing a turbine component having a higher-pressure region and a lower-pressure region, introducing particles into the higher-pressure region, and at least partially repairing an opening between the higher-pressure region and the lower-pressure region with at least one of the particles to form a repaired turbine component. The repaired coating includes a silicon material, a ceramic matrix composite material, and a repaired region having the silicon material deposited on and surrounded by the ceramic matrix composite material. The repaired turbine component a ceramic matrix composite layer and a repaired region having silicon material deposited on and surrounded by the ceramic matrix composite material.

WO 2014/022040 A2

Published:

— *without international search report and to be republished upon receipt of that report (Rule 48.2(g))*

TURBINE REPAIR PROCESS, REPAIRED COATING, AND REPAIRED TURBINE COMPONENT

STATEMENT REGARDING FEDERALLY SPONSORED RESEARCH OR DEVELOPMENT

[0001] The United States Government retains license rights in this invention and the right in limited circumstances to require the patent owner to license others on reasonable terms by the terms of Government Contract No. DE-FC26-05NT42643 awarded by the United Stated Department of Energy.

FIELD OF THE INVENTION

[0002] The present invention is directed to turbine components and process of repairing turbine components. More specifically, the present invention is directed to repaired coatings on turbine components and processes of repairing coatings on turbine components.

BACKGROUND OF THE INVENTION

[0003] Gas turbine components are subjected to both thermally, mechanically, and chemically hostile environments. For example, in the compressor portion of a gas turbine, atmospheric air is compressed, for example, to 10-25 times atmospheric pressure, and adiabatically heated, for example, to between 800°F and 1250°F (427°C - 677°C), in the process. This heated and compressed air is directed into a combustor, where it is mixed with fuel. The fuel is ignited, and the combustion process heats the gases to very high temperatures, for example, in excess of 3000°F (1650°C). These hot gases pass through the turbine, where airfoils fixed to rotating turbine disks extract energy to drive the fan and compressor of the turbine, and the exhaust system, where the gases provide sufficient energy to rotate a generator rotor to produce electricity.

[0004] Operation in these conditions may create a susceptibility to damage, for example, from foreign objects striking turbine components, such as, buckets/blades. Damage to buckets/blades

can result in decreased operational efficiency of turbines, more frequent repairs, shorter duration between scheduled repairs, and/or cost inefficiencies.

[0005] An in-situ turbine repair process, a repaired coating, and a repaired turbine component that do not suffer from one or more of the above drawbacks would be desirable in the art.

BRIEF DESCRIPTION OF THE INVENTION

[0006] In an exemplary embodiment, a turbine repair process includes providing a turbine component having a higher-pressure region and a lower-pressure region, introducing particles into the higher-pressure region, and at least partially repairing an opening between the higher-pressure region and the lower-pressure region with at least one of the particles to form a repaired turbine component.

[0007] In another exemplary embodiment, a repaired coating includes a silicon dioxide material, a ceramic matrix composite material, and a repaired region having the silicon dioxide material deposited on and surrounded by the ceramic matrix composite material.

[0008] In another exemplary embodiment, a repaired turbine component a ceramic matrix composite layer and a repaired region having silicon dioxide material deposited on and surrounded by the ceramic matrix composite material.

[0009] Other features and advantages of the present invention will be apparent from the following more detailed description of the preferred embodiment, taken in conjunction with the accompanying drawings which illustrate, by way of example, the principles of the invention.

BRIEF DESCRIPTION OF THE DRAWINGS

[0010] FIG. 1 schematically shows an exemplary turbine repair process of an exemplary turbine component according to the disclosure.

[0011] FIG. 2 schematically shows an exemplary turbine repair process of an exemplary coating according to the disclosure.

[0012] Wherever possible, the same reference numbers will be used throughout the drawings to represent the same parts.

DETAILED DESCRIPTION OF THE INVENTION

[0013] Provided is an exemplary turbine repair process, a repaired coating, and a repaired turbine component. Embodiments of the present disclosure extend the useful life of turbine components, permit in situ repair of coatings and/or turbine components, prevent damage due to oxidation, prevent fouling of engine hardware, or combinations thereof. One embodiment permits silicon molecules to travel through a cooling passage and stick to walls of holes made by foreign and/or domestic object damage, for example, via Brownian motion and/or thermal energy that they possess. The molecules are eventually converted to silicon dioxide and lessen recession rates of ceramic matrix composite substrates due to increased local amount of SiO_2 species in the vicinity of the damaged section.

[0014] FIGS. 1 and 2 schematically show an exemplary turbine repair process. Each of FIG. 1 and FIG. 2 shows a turbine component 101A, followed by the turbine component 101B after experiencing damage, and the turbine component 101C after being repaired according to an embodiment of the process. FIG. 2 shows sectioned views corresponding with FIG. 1, along lines A-A, B-B, and C-C. The turbine repair process is capable of being used with a suitable turbine component 101. As shown in FIG. 1, in one embodiment, the turbine component is a turbine bucket 100 or blade. Other suitable turbine components include, but not limited to, a dovetail, a shank, platform, airfoil, tip cap, fir-tree, or any other suitable component having a pressure differential.

[0015] As shown in FIG. 2, the turbine component 101 includes a higher-pressure region 103 and a lower-pressure region 105. The higher-pressure region 103 of the turbine component 101 is bound by one or more layers including a ceramic matrix composite material 121. In one embodiment, the ceramic matrix composite material 121 defines a cavity within the turbine component 101, such as, a core of the turbine bucket 100. In one embodiment, the core is broken into two or more cavities.

[0016] Proximal to the lower-pressure region 105, in one embodiment, the turbine component 101 includes a coating, such as an environmental barrier coating (EBC) 115 on the turbine component 101. In one embodiment, the EBC 115 extends around the turbine component 101, such as, throughout a suction side and a pressure side. The EBC 115 includes any suitable number of layers or materials capable of operation under conditions of the lower-pressure region 105. The layer(s) of the EBC 115 is/are applied by any suitable process capable of applying material to ceramic matrix composites. For example, suitable processes include, but are not limited to, atmospheric plasma spray, reactive ion implantation, chemical vapor deposition, plasma-enhanced chemical vapor deposition, dip coating, electrophoretic deposition, or a combination thereof. Suitable layers are silicon-based and/or include silicon dioxide, such as, a bond coat providing chemical compatibility with ceramic matrix composites. Another suitable layer is a transition layer, such as, barium strontium aluminosilicate (BSAS), $(Yb,Y)_2Si_2O_7$, mullite with barium strontium aluminosilicate, or a combination thereof, providing resistance to water-vapor penetration, chemical compatibility with the bond coat, a coefficient of thermal expansion compatible with ceramic matrix composites, or a combination thereof. Another suitable layer is a top coat, such as, Y_2SiO_5 or barium strontium aluminosilicate, providing water-vapor recession and/or a coefficient of thermal expansion compatible with ceramic matrix composites. In further embodiments, the EBC 115 includes a thermally grown oxide layer.

[0017] During operation of a turbine using the turbine component 101, the higher-pressure region 103 and the lower-pressure region 105 are under different conditions. For example, during operation, the higher-pressure region 103 is at a higher pressure than the lower-pressure region 105, resulting in the pressure differential. The pressure differential decreases upon a portion of the EBC 115 and the ceramic matrix composite material 121 being removed, for example, by foreign object damage to the lower-pressure region 105. Such damage forms an opening 109 between the higher-pressure region 105 and the lower-pressure region 103.

[0018] In one embodiment, prior to the foreign object damage, the turbine component 101A operates with a predetermined pressure differential range, for example, between about 3% and 10% more than an outside zone (such as, a hot gas path) and/or greater than about 3 psi, greater than about 5 psi, at about 5 psi, between about 3 psi and about 7 psi, between about 5 psi and

about 7 psi, or any suitable combination, sub-combination, range, or sub-range thereof. Upon foreign object damage occurring or after foreign object damage has occurred, the pressure differential between the higher-pressure region 103 and the lower-pressure region 105 of the turbine component 101B decreases. In one embodiment, the decreased pressure differential is identified, thereby permitting identification of the damage without visual inspection. In response to the foreign object damage occurring, the turbine repair process is employed.

[0019] Additionally or alternatively, such identification of foreign object damage is capable of being based upon monitoring of a predetermined pressure range for the higher-pressure region 103 and/or a predetermined pressure range for the lower-pressure region 105. In one embodiment, the predetermined pressure range for the higher-pressure region 103 is between about 3% and 10% more than an outside zone (such as, a hot gas path and/or the lower-pressure region 105). After foreign object damage, the pressure within the higher-pressure region 103 is decreased.

[0020] The higher-pressure region 103 and the lower-pressure region 105 also operate under temperature differences, providing a temperature differential. For example, in one embodiment, the higher-pressure region 103 operates at a lower temperature, such as, between about 700°F and about 1500°F, and the lower-pressure region 105 operates at a higher temperature, such as, between 1200°F and about 2500°F.

[0021] The opening 109 may be formed by the foreign object damage between the higher-pressure region 103 and the lower-pressure region 105, resulting in the decrease in the pressure differential between the higher-pressure region 103 and the lower-pressure region 105. The foreign object has a random size based upon structured particles and/or agglomerates coming from upstream portions. In one embodiment, the foreign object damage corresponds to a foreign particle having a dimension of greater than about 1.4 mm, greater than about 1.6 mm, greater than about 1.8 mm, greater than about 2.0 mm, greater than about 2.2 mm, or any suitable combination, sub-combination, range, or sub-range thereof. The opening 109 has a void geometry formed through the EBC 115 and the ceramic matrix composite material 121. For example, in one embodiment, the opening 109 is a channel, a cylindrical recess or hole, a conical

recess or hole, a frustoconical recess or hole, a crack/fissure, or any combination thereof.

[0022] To repair the damage, the opening 109 is at least partially repaired by one or more of the particles 107 that are introduced through the higher-pressure region 103. In one embodiment, the particles 107 are introduced through a feed 123, for example, positioned in a dovetail portion of the turbine bucket 100. The particles 107 travel toward the opening 109, for example, based upon the pressure differential, contacting the ceramic matrix composite material 121. A portion of the particles 107 contacts the EBC 115 and/or is expelled into the lower-pressure region 105. The particles 107 that contact the EBC 115 do not substantially adhere. At least a portion of the particles 107 that contact the ceramic matrix composite material 121 adhere. These particles 107 disrupt the opening 109, thereby at least partially filling the whole affected passage and permitting the pressure differential to increase, for example, such that the higher-pressure region 103 and the lower-pressure region 105 differ in pressure within the operational range present prior to the foreign object damage and at least partially repairing the turbine component 101C. In one embodiment, the particles 107 are converted to other materials, such as a fused ceramic and/or an oxidized material (for example, silicon dioxide), through the presence of heat and/or oxygen.

[0023] The particles 107 are any suitable particles capable of being introduced to the higher-pressure region 103 and at least partially repairing the opening 109. In one embodiment, the particles 107 include elemental silicon. In a further embodiment, the oxygen and/or moisture of the higher-pressure region 103 converts a portion or substantially all of the particles 107 into silicon dioxide.

[0024] The particles 107 are any suitable geometry and size permitting introduction into the higher-pressure region 103 and at least partially repairing of the opening 109. In one embodiment, one or more of the particles 107 are spheroid, spherical, cuboid, substantially planar, complex-shaped, or a combination thereof. In one embodiment, one or more of the particles 107 are nano-sized, for example, having a maximum dimension within a nanometer range, such as, between about 2 nm and about 10 nm, between about 5 nm and about 6 nm, less than about 20 nm, less than about 10 nm, less than about 5 nm, or any suitable combination, sub-

combination, range, or sub-range thereof. In one embodiment, one or more of the particles 107 are micron-sized, for example, having a maximum dimension within a micron range, such as, less than about 2 microns, less than about 1 micron, between about 1 micron and about 2 microns, about 1 micron, or any suitable combination, sub-combination, range, or sub-range thereof.

[0025] The particles 107 are introduced in any suitable manner, for example, capable of permitting continued, non-stop operation of a turbine utilizing the turbine component 101. In one embodiment, the particles 107 are suspended in a fluid, such as a liquid and/or a gas. In one embodiment, the particles 107 are introduced by injection, for example, with air and/or other gases, into the feed 123.

[0026] In one embodiment, the particles 107 are introduced with air. In one embodiment, the particles 107 are introduced with the air at a weight ppm Si of between about 0.07 and about 4, between about 0.07 and about 0.2, between about 1 and about 2, between about 2 and about 3, between about 3 and about 4, or any suitable combination, sub-combination, range, or sub-range thereof.

[0027] In one embodiment, the particles 107 are introduced intermittently, for example, to form about 1 thousand's of an inch of material in the opening 109 per day, at a rate of about 4 mols, or any other suitable rate permitting the turbine component 101 to be repaired. In one embodiment, the particles 107 are introduced during operation of a turbine utilizing the turbine component.

[0028] Upon being repaired, the turbine component 101, such as the bucket 100, includes a repaired region 111 of the repaired coating having a silicon dioxide material 202 deposited on and surrounded by the ceramic matrix composite material 121, corresponding to a region of damage from the foreign object damage, such as the opening 109. In one embodiment, the silicon dioxide material 202 is deposited on and completely encircled by a portion of the ceramic matrix composite material 121 and/or the EBC 115. In one embodiment, the silicon dioxide material 202 includes entrained elemental silicon that has not oxidized. In this embodiment, the repaired region 111 has a hardness between the hardness of silicon dioxide and silicon.

[0029] While the invention has been described with reference to a preferred embodiment, it will be understood by those skilled in the art that various changes may be made and equivalents may be substituted for elements thereof without departing from the scope of the invention. In addition, many modifications may be made to adapt a particular situation or material to the teachings of the invention without departing from the essential scope thereof. Therefore, it is intended that the invention not be limited to the particular embodiment disclosed as the best mode contemplated for carrying out this invention, but that the invention will include all embodiments falling within the scope of the appended claims.

Claims

What is claimed is:

1. A turbine repair process, comprising:

providing a turbine component having a higher-pressure region and a lower-pressure region, the higher-pressure region being at a higher pressure than the lower-pressure region;

introducing particles into the higher-pressure region; and

at least partially repairing an opening between the higher-pressure region and the lower-pressure region with at least one of the particles to form a repaired turbine component.

2. The process of claim 1, further comprising identifying a pressure difference between the higher-pressure region and the lower-pressure region prior to introducing the particles into the higher-pressure region.

3. The process of claim 1, wherein the higher pressure of the higher-pressure region is about 3% greater than a lower pressure of the lower-pressure region.

4. The process of claim 1, wherein the higher pressure of the higher-pressure region is about 10% greater than a lower pressure of the lower-pressure region.

5. The process of claim 1, wherein the higher pressure of the higher-pressure region is between about 3% and about 10% greater than a lower pressure of the lower-pressure region.

6. The process of claim 1, wherein the particles include elemental silicon.

7. The process of claim 1, wherein the lower-pressure region is at a temperature of between about 1200°F and about 2500°F.

8. The process of claim 1, wherein the higher-pressure region is at a temperature of between about 700°F and about 1500°F.

9. The process of claim 1, wherein the particles are less than about 20 nm.

10. The process of claim 1, wherein the particles are less than about 2 microns.

11. The process of claim 1, wherein the introducing of the particles is by injection with compressed air.

12. The process of claim 1, wherein the higher-pressure region is defined by a layer including ceramic matrix composite material.

13. The process of claim 1, wherein the repaired turbine component is a turbine bucket, a shroud, or a nozzle.

14. The process of claim 1, wherein the repaired turbine component includes a repaired region having a silicon material deposited on and surrounded by a ceramic matrix composite material.

15. The process of claim 1, wherein at least a portion of the particles are oxides after the at least partially repairing of the opening.

16. The process of claim 1, wherein at least a portion of the particles are fused after the at least partially repairing of the opening.

17. A repaired coating, comprising:

a silicon material;

a ceramic matrix composite material;

a repaired region having the silicon dioxide material deposited on and surrounded by the ceramic matrix composite material.

18. A repaired turbine component, comprising:

a ceramic matrix composite layer; and

a repaired region having silicon material deposited on and surrounded by the ceramic matrix composite material.

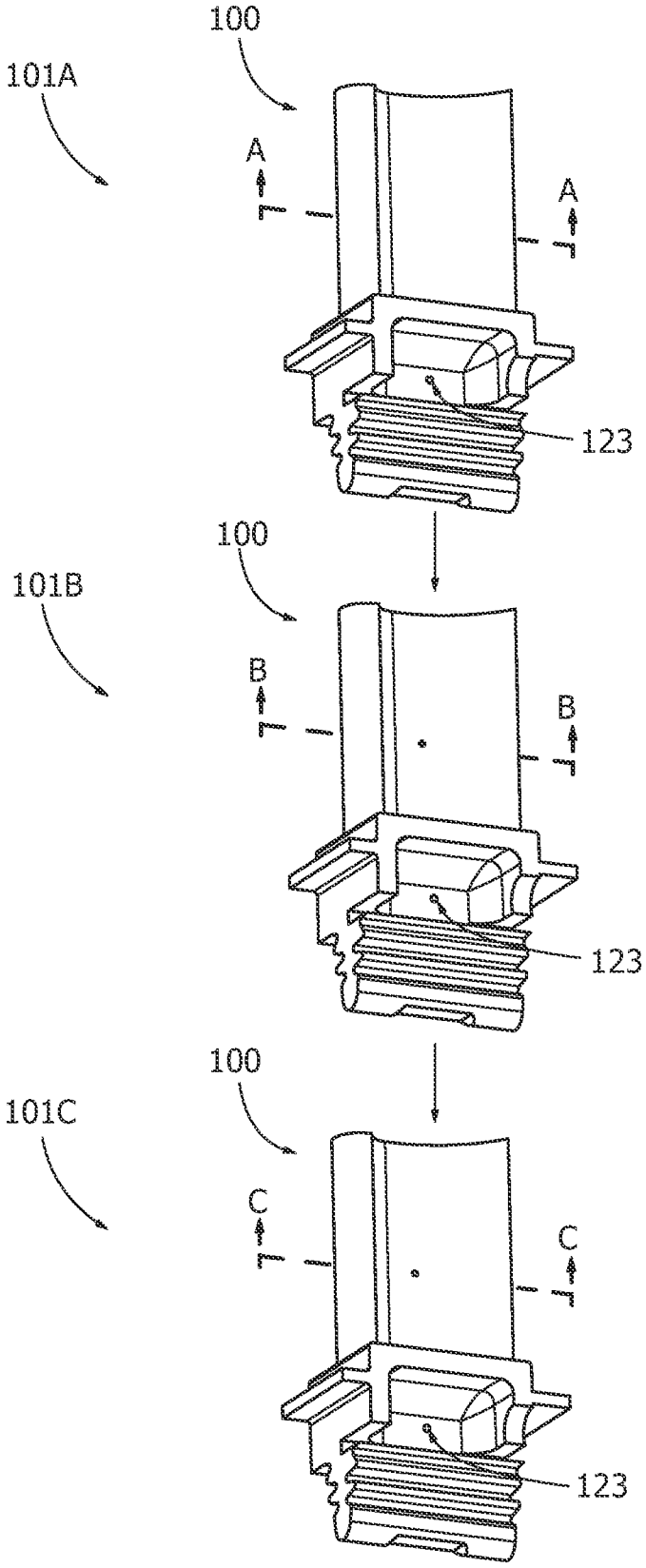

FIG. 1

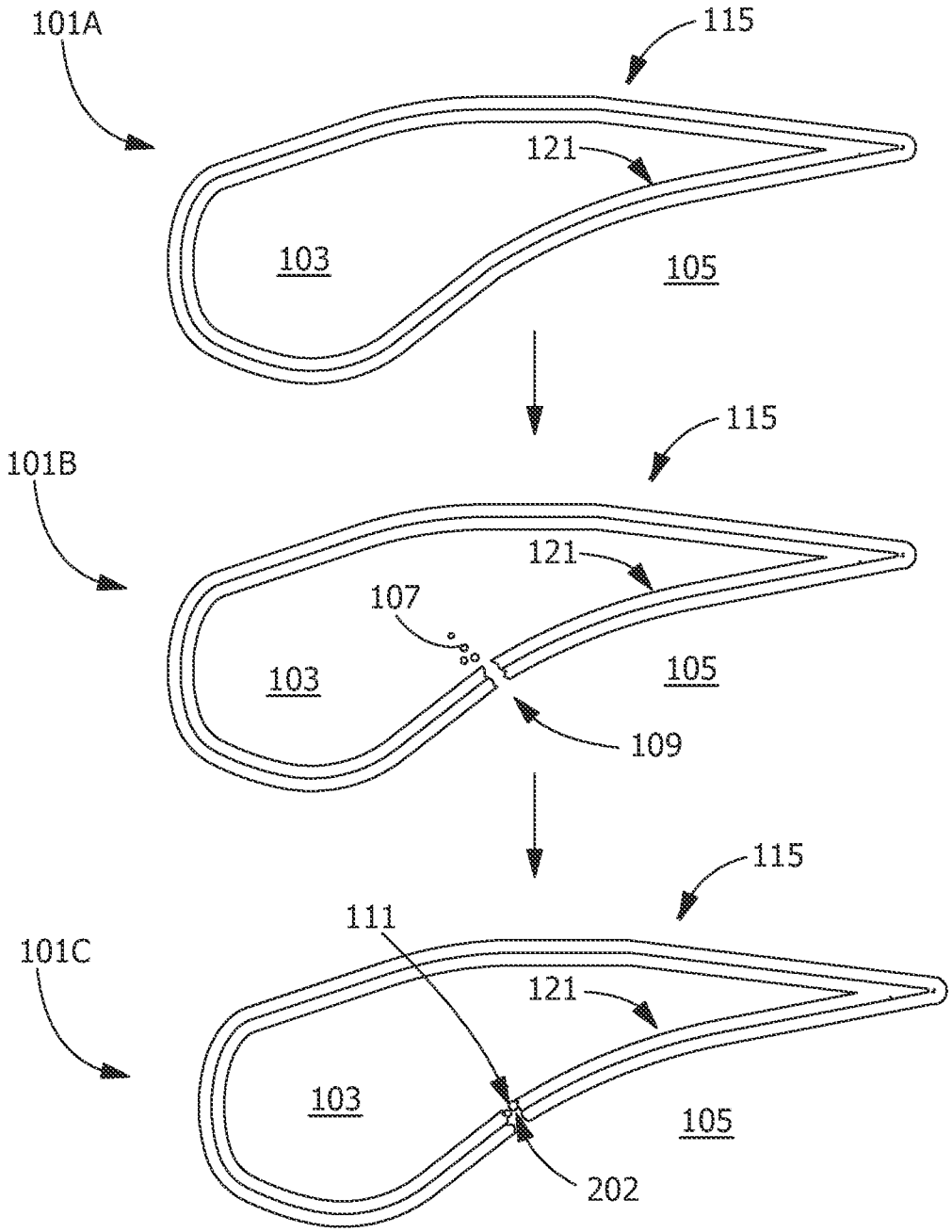
101A
115
121
103
105
115
101B
121
107
103
105
109
115
111
101C
121
103
105
202

FIG. 2