April 11, 1961 E. D. HOWELL ET AL 2,979,300

CAN OPENER MOUNTING STRUCTURE

Filed Aug. 28, 1959 2 Sheets-Sheet 1

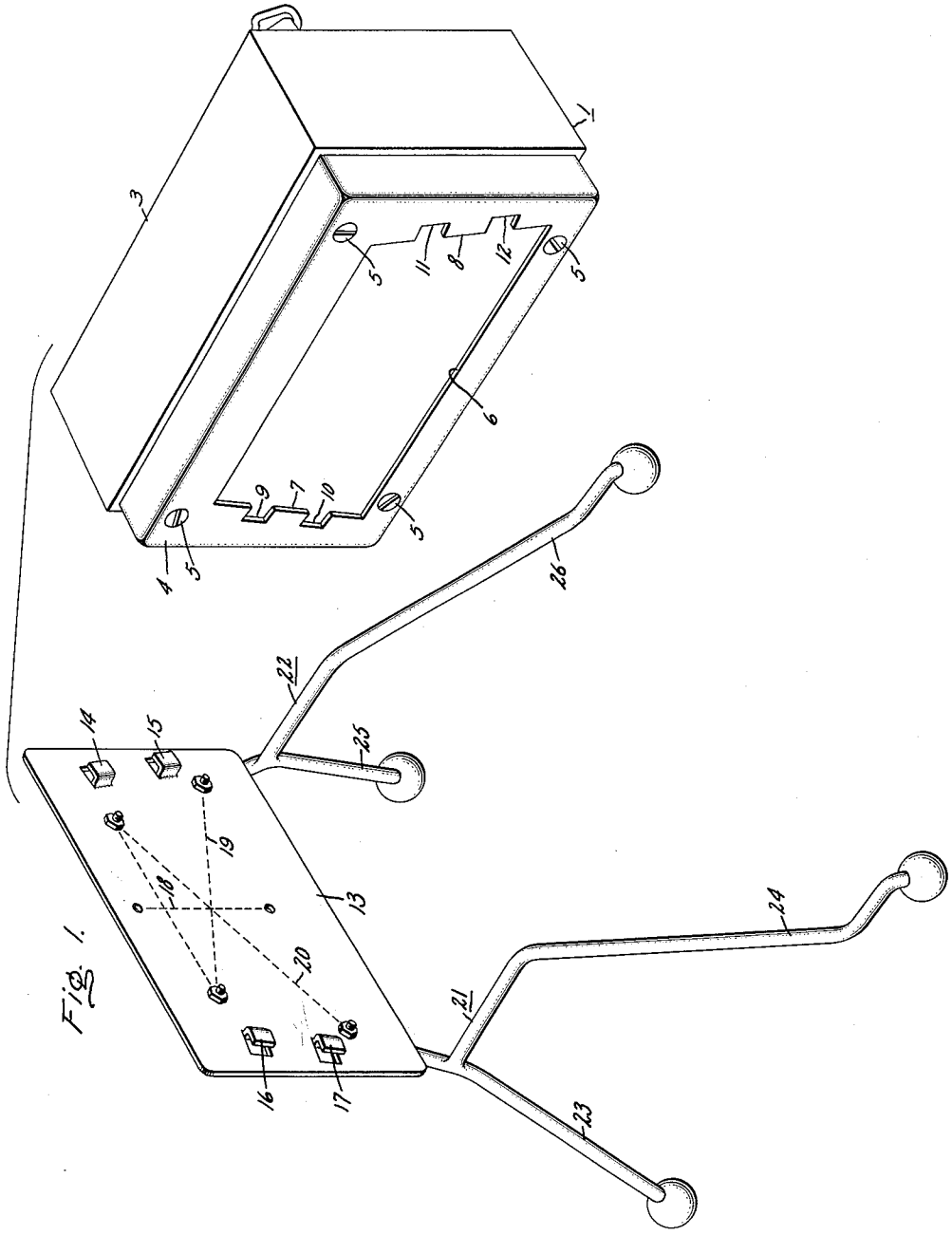

Fig. 1.

Inventors:
Edward D. Howell,
James Green, Jr.
by T G Dyer A
Their Attorney.

April 11, 1961 E. D. HOWELL ET AL 2,979,300

CAN OPENER MOUNTING STRUCTURE

Filed Aug. 28, 1959 2 Sheets-Sheet 2

Fig. 2.

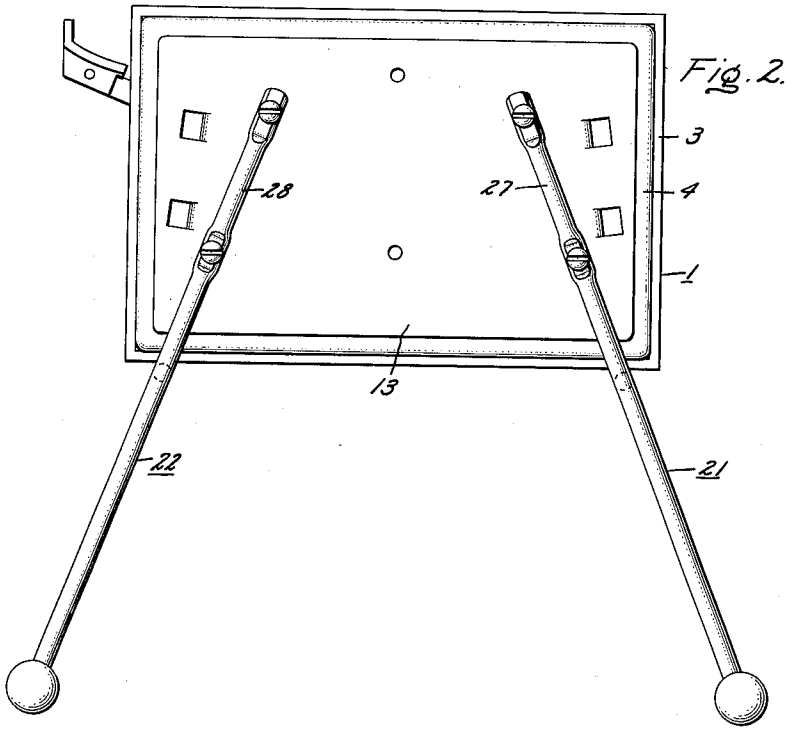

Fig. 3.

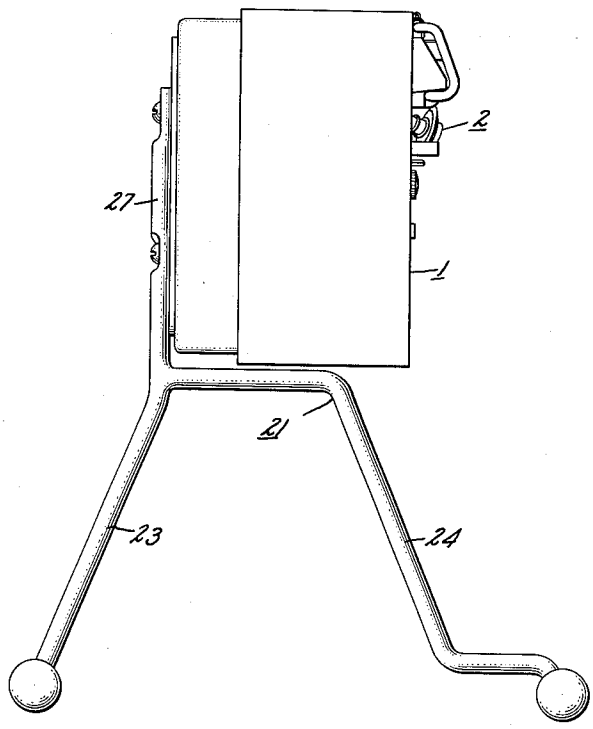

Inventors:
Edward D. Howell,
James Green, Jr.
by T G Dysart
Their Attorney.

United States Patent Office 2,979,300
Patented Apr. 11, 1961

2,979,300

CAN OPENER MOUNTING STRUCTURE

Edward D. Howell, New York, and James Green, Jr., Spencerport, N.Y., assignors to General Electric Company, a corporation of New York

Filed Aug. 28, 1959, Ser. No. 836,783

4 Claims. (Cl. 248—146)

This invention relates to can openers, and has as its principal object the provision of an improved mounting structure for releasably supporting such devices.

Further objects and advantages of the invention will become apparent as the following description proceeds, and the features of novelty which characterize the invention will be pointed out with particularity in the claims appended to a forming a part of this specification.

Briefly stated, in one embodiment of our invention we provide a mounting plate arranged to releasably engage the rear wall of the casing of an automatic electric can opener by means of a novel tab and notch arrangement, apertures formed in the mounting plate are so positioned that the plate may be secured to a vertical wall by fasteners extending therethrough and into either a vertical stud or a horizontal molding or the wall itself. A supporting frame, including legs adapted to rest on a horizontal surface and a mounting portion provided with apertures which may be aligned with the apertures in the mounting plate so as to receive suitable fasteners, may also be utilized.

For a better understanding of the invention, reference may be made of the following description and the accompanying drawing in which:

Fig. 1 is an exploded view in perspective of the mounting structure and can opener of the present invention;

Fig. 2 is a rear elevation view of the mounting structure and can opener shown in Fig. 1, the parts being in a similar relation; and

Fig. 3 is a side elevation view of the can opener and mounting structure shown in Fig. 2.

Referring to the drawing, the numeral 1 designates the casing of an automatic electric can opener provided with mechanism generally designated by the numeral 2 on its front wall for supporting a can and severing the lid thereof. Various mechanisms of this nature are well-known in the art and since the details of the cutting mechanism do not form a part of this invention, further description thereof will be omitted. Casing 1 may include a front section 3 formed of plastic material and a rear wall 4 made of metal, for example. In the form of the invention illustrated in the drawing portions 3 and 4 of casing 1 are secured together by screws 5 which pass through rear wall 4 and into fastening engagement with portion 3 but it will be understood that various fastening means may be utilized, and also that a unitary one-piece casing may be employed.

Rear wall 4 of casing 1 is provided with a generally rectangular opening 6, the side edges of which are preferably inclined at a slight angle as shown in Fig. 1. Side edge 7 of opening 6 is formed with a pair of rectangular notches 9 and 10 while side edge 8 includes a pair of similar notches 11 and 12; the function of these notches will become apparent as the following description proceeds.

In order to permit casing 1 to be mounted either on a vertical wall or on a stand adapted to rest on a horizontal surface, we provide a mounting plate 13 generally similar in size and shape to rear wall 4 of the casing. Mounting plate 13 is arranged to releasably engage rear wall 4 in supporting relation, supporting tabs 14, 15, 16 and 17 being provided for this purpose. These supporting tabs project from the inner face of the mounting plate 13 and are preferably struck out of the base metal and bent so as to be spaced therefrom and to project laterally from the center line of the plate. Tabs 14 and 15 are spaced so as to mate with notches 9 and 10 in rear wall 4 while tabs 16 and 17 are spaced so as to mate with notches 11 and 12. In this connection it will be observed that notches 14 and 16 are somewhat closer to the center of mounting plate 13 than are notches 15 and 17. Thus, when rear wall 4 of the casing of the can opener is placed in juxtaposition to the inner face of mounting plate 13 each of the tabs on the mounting plate is free to enter one of the notches in the side edges of opening 6, thus positioning the tabs adjacent the innermost surface of rear wall 4. Thereafter, casing 1 may be shifted downwardly with respect to mounting plate 13 whereupon the tabs rest in engagement with the inner surface of rear wall 4 and provide a firm support for the can opener.

In accordance with our invention, mounting plate 13 may either be conveniently mounted on a vertical wall or supported on a mounting frame adapted to rest on a horizontal surface such as a kitchen counter top. Mounting plate 13 includes a pair of spaced apertures located at the ends of a visible vertical center line 18, a second pair of apertures located at the ends of a visible diagonal line 19 and a third pair of apertures located at the ends of a visible diagonal line 20. It will be observed that lines 18, 19 and 20 cross at a common central point and lie wholly within the edges of the mounting plate. These visible lines serve the purpose of locating pairs of apertures which may be utilized in fastening plate 13 to a vertical wall. For example, mounting 13 may be attached to the wall by a pair of screws positioned in the apertures at the ends of vertical line 18 and fastened to a vertical wall stud, or in the apertures at the ends of lines 19 or 20 if the wall itself or a molding board portion thereof is suitable for holding the screws in place. In each case, the weight of the can opener when supported on mounting plate 13 will be either distributed along the center line 18 or balanced on opposite sides thereof.

If it should be desired to mount the can opener so that it may be supported on a horizontal surface, mounting plate 13 may also be utilized in conjunction with the supporting frame arrangement illustrated in the drawing. As shown therein, a pair of supporting frames 21 and 22 may be secured to mounting plate 13, four of the six apertures in the mounting plate being utilized for this purpose. Mounting frame 21 includes a pair of leg portions 23 and 24 each of which terminates in a suitable foot such as a rubber knob, and similarly frame 22 includes a pair of legs 25 and 26. Supporting frame 21 includes a mounting portion 27 provided with a pair of apertures spaced so as to be in alignment with the two apertures in mounting plate 13 on the right side thereof (as viewed in Fig. 1) while supporting frame 22 includes a mounting portion 28 provided with a pair of spaced apertures arranged to cooperate with the two apertures in mounting plate 13 on the left side thereof. Supporting frames 21 and 22 are secured to mounting plate 18 by releasable fasteners, such as the nuts and bolts illustrated in the drawing. When these parts are assembled as shown in Fig. 1, the mounting structure formed thereby is capable of firmly supporting the can opener so that it may be operated while resting on a horizontal surface. It will, of course, be understood that tabs 14, 15, 16 and 17 cooperate with notches 9, 10, 11 and 12 in the same manner

as described above and that the same precedure is used when the casing of the can opener is to be placed on or removed from mounting plate 13.

While we have disclosed a specific embodiment of our invention, we do not desire the invention to be limited to the particular construction illustrated and described, and we intend by the appended claims to cover all modifications within the true spirit and scope of our invention.

What we claim is:

1. A can opener comprising a casing having a front wall and a rear wall, cutter means on the front wall of said casing adapted to support a can and sever the lid thereof, the rear wall of said casing having an opening of generally rectangular configuration, each of the side edges of said opening having at least one notch therein, a mounting plate including a plurality of laterally projecting tabs secured thereto and adapted to pass through said notches and be shifted into engagement with the side edges of the opening in said rear wall of said casing, said mounting plate having a plurality of apertures therein, at least one supporting frame including leg portions adapted to rest on a horizontal surface and a mounting portion including a pair of apertures therein spaced so that each is in alignment with one of the apertures in said mounting plate when the supporting frame and mounting plate are assembled in operative position, and a plurality of removable fasteners adapted to be positioned in said apertures in engagement with said supporting frame and said mounting plate.

2. A can opener as defined in claim 1 in which said mounting plate includes on the side thereof from which said tabs project a visible vertical center line and a pair of visible diagonal lines, said lines crossing a common central point and lying wholly within the edges of the mounting plate, said apertures being six in number and located at the ends of said lines.

3. A can opener comprising a casing having a front wall and a rear wall, cutter means on the front wall of said casing adapted to support a can and sever the lid thereof, the rear wall of said casing having an opening of generally rectangular configuration, each of the side edges of said opening having at least one notch therein, and a mounting plate including a plurality of integral laterally projecting tabs bent out of the plane thereof and adapted to pass through said notches and be shifted into engagement with the side edges of the opening in said rear wall of said casing, said mounting plate having a plurality of apertures therein adapted to receive fastener means for securing the mounting plate to a wall or the like.

4. A can opener comprising a casing having a front wall and a rear wall, cutter means on the front wall of said casing adapted to support a can and sever the lid thereof, the rear wall of said casing having means defining at least one opening therein, said last mentioned means including a pair of laterally spaced side edges facing the vertical center line of said rear wall, each of said side edges having a pair of vertically spaced notches therein, and a mounting plate including two pairs of integral laterally projecting tabs bent out of the plane thereof and spaced so as to mate with said pairs of notches, each of said tabs being respectively adapted to pass through one of said notches and be shifted into engagement with portions of said rear wall adjacent said side edges, said mounting plate having a plurality of apertures therein adapted to receive fastener means for securing the mounting plate to a wall or the like.

References Cited in the file of this patent

UNITED STATES PATENTS

1,796,176	Witzleb	Mar. 10, 1931
2,440,867	Marchand	May 4, 1948
2,754,991	Hagerty	July 17, 1956
2,826,755	Aiken	Mar. 11, 1958

FOREIGN PATENTS

689,995	Great Britain	Apr. 8, 1953