Dec. 7, 1948. F. H. SHEPARD, JR 2,455,617

TELESCRIBER SYSTEM UTILIZING CARRIER TRANSMISSION OF FOUR INTELLIGENCES

Filed Nov. 15, 1944 5 Sheets-Sheet 1

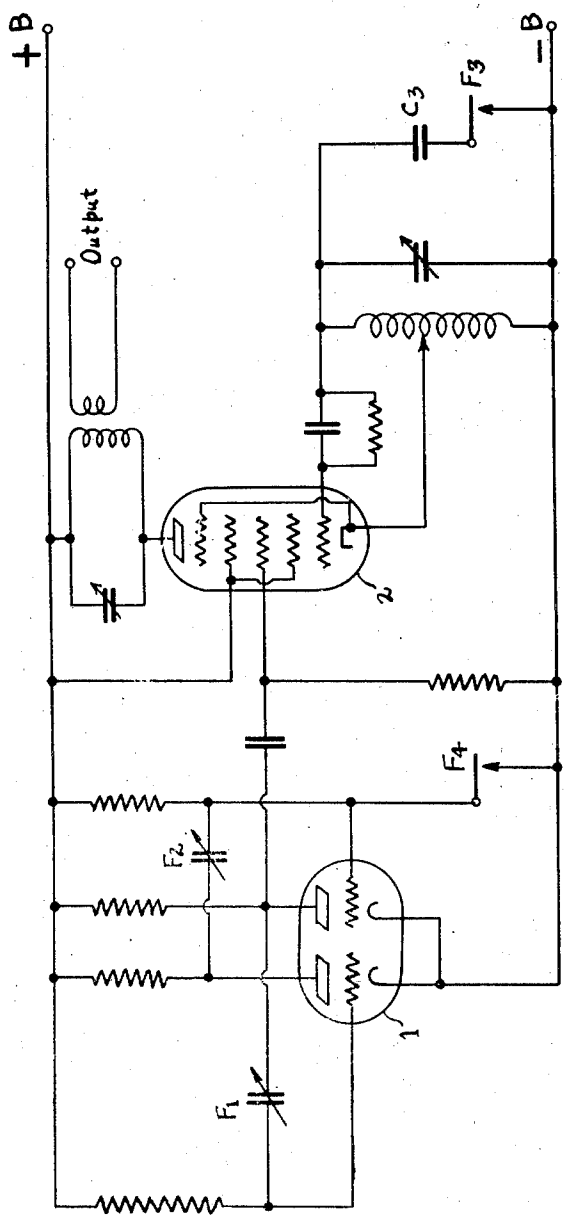

F1 HORIZONTAL POSITION
F2 VERTICAL POSITION
F3 PENCIL LIFTER
F4 PAPER SHIFTER

Fig. 1.

INVENTOR
FRANCIS H. SHEPARD, JR.
BY Darby & Darby
ATTORNEYS

Dec. 7, 1948. F. H. SHEPARD, JR 2,455,617

TELESCRIBER SYSTEM UTILIZING CARRIER TRANSMISSION OF FOUR INTELLIGENCES

Filed Nov. 15, 1944 5 Sheets-Sheet 2

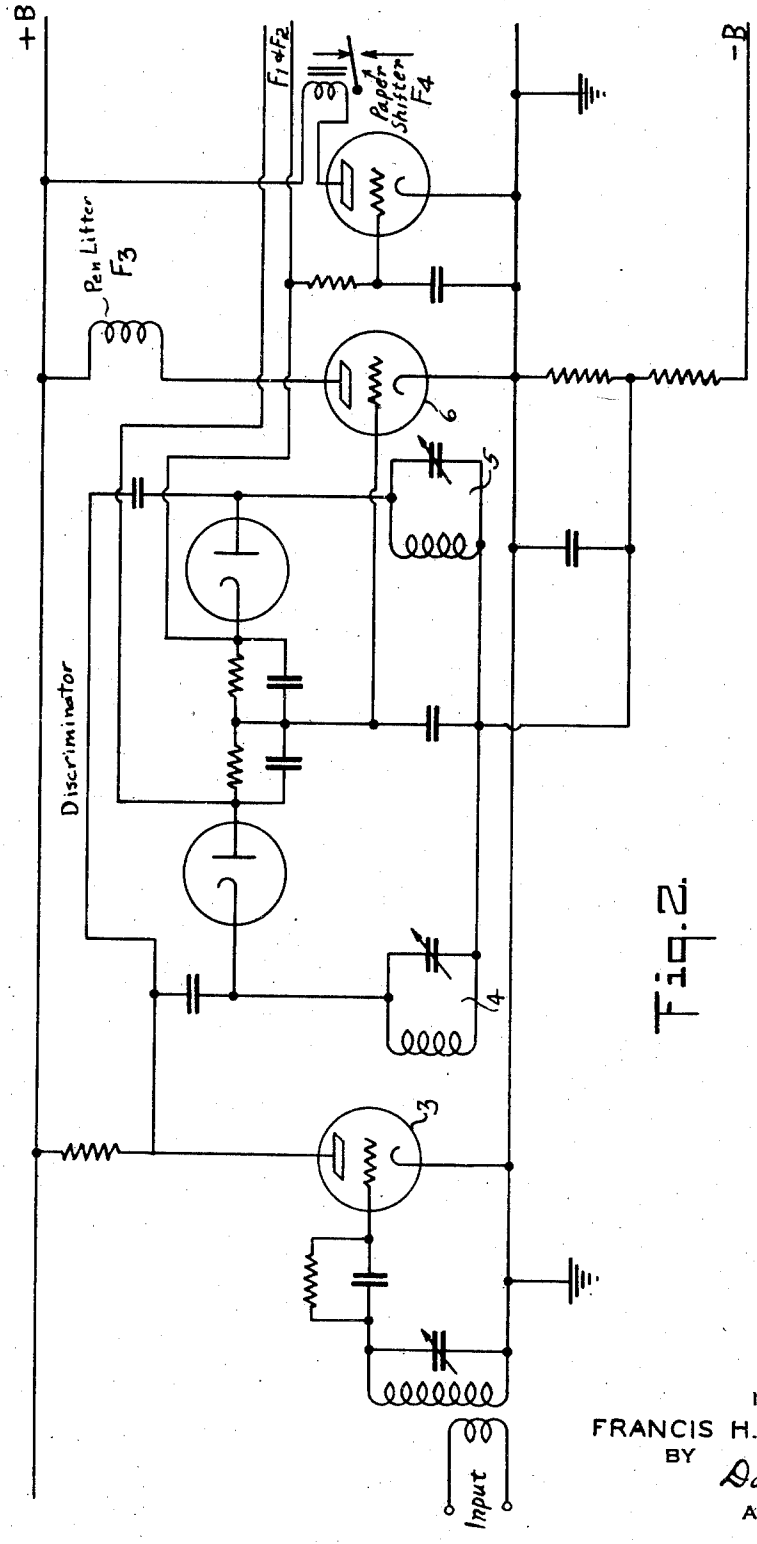

Fig. 2

INVENTOR
FRANCIS H. SHEPARD, JR.
BY
Darby & Darby
ATTORNEYS

Dec. 7, 1948. F. H. SHEPARD, JR 2,455,617

TELESCRIBER SYSTEM UTILIZING CARRIER TRANSMISSION OF FOUR INTELLIGENCES

Filed Nov. 15, 1944 5 Sheets-Sheet 3

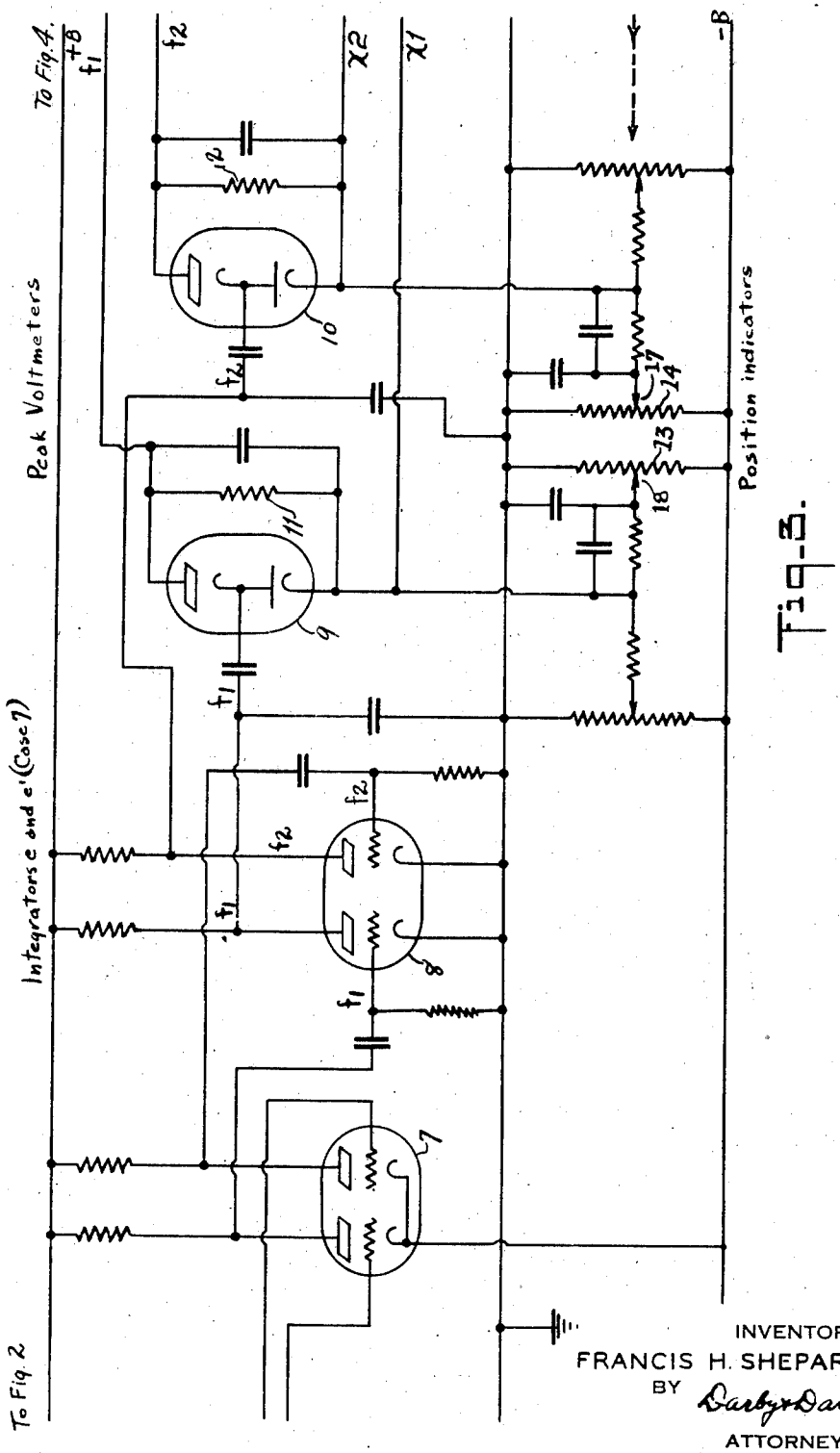

Fig. 3.

INVENTOR
FRANCIS H. SHEPARD, JR.
BY Darby & Darby
ATTORNEYS

Dec. 7, 1948. F. H. SHEPARD, JR 2,455,617

TELESCRIBER SYSTEM UTILIZING CARRIER TRANSMISSION OF FOUR INTELLIGENCES

Filed Nov. 15, 1944 5 Sheets-Sheet 4

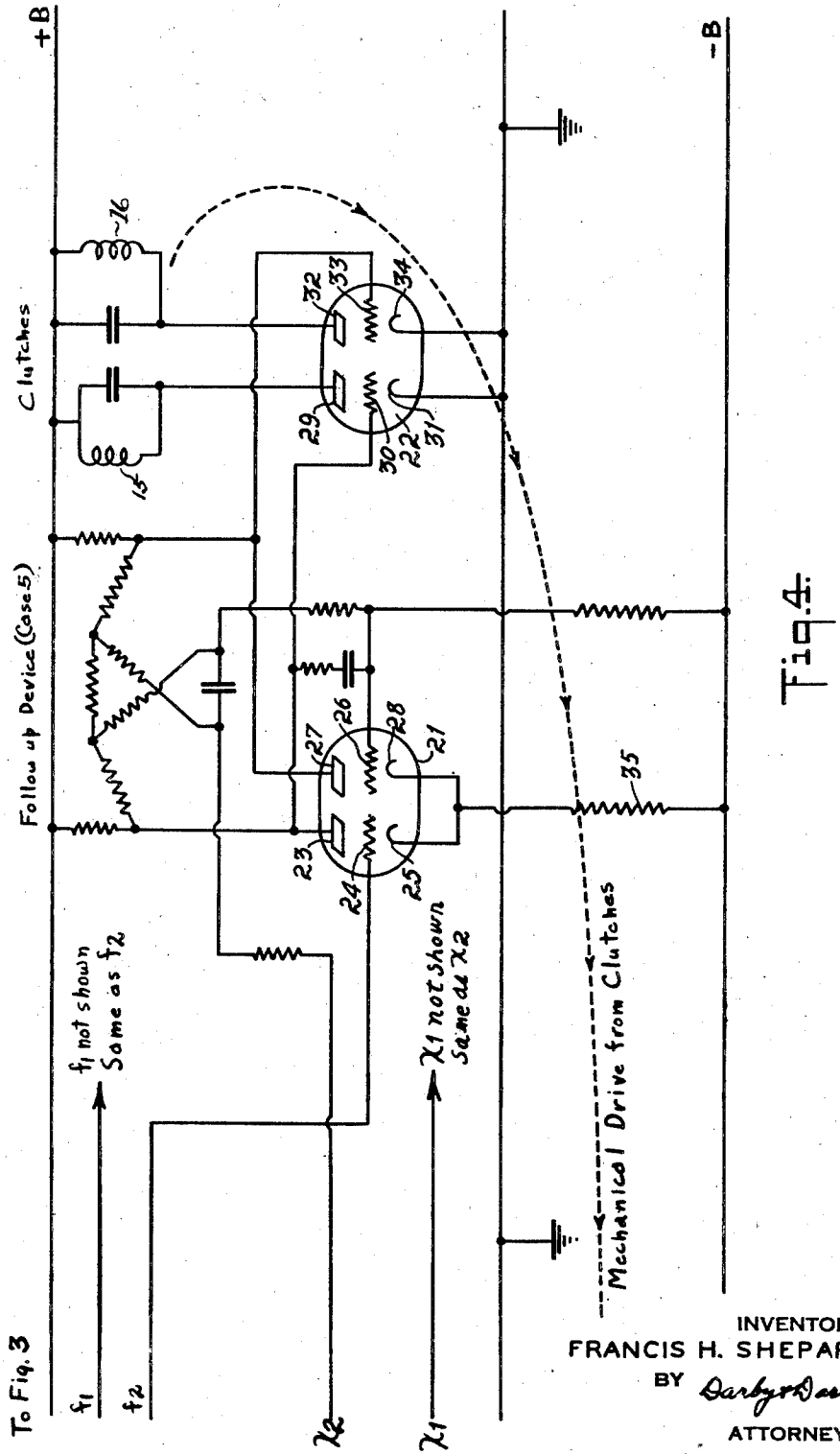

Fig. 4

INVENTOR
FRANCIS H. SHEPARD, JR.
BY Darby & Darby
ATTORNEYS

Dec. 7, 1948. F. H. SHEPARD, JR 2,455,617

TELESCRIBER SYSTEM UTILIZING CARRIER TRANSMISSION OF FOUR INTELLIGENCES

Filed Nov. 15, 1944 5 Sheets-Sheet 5

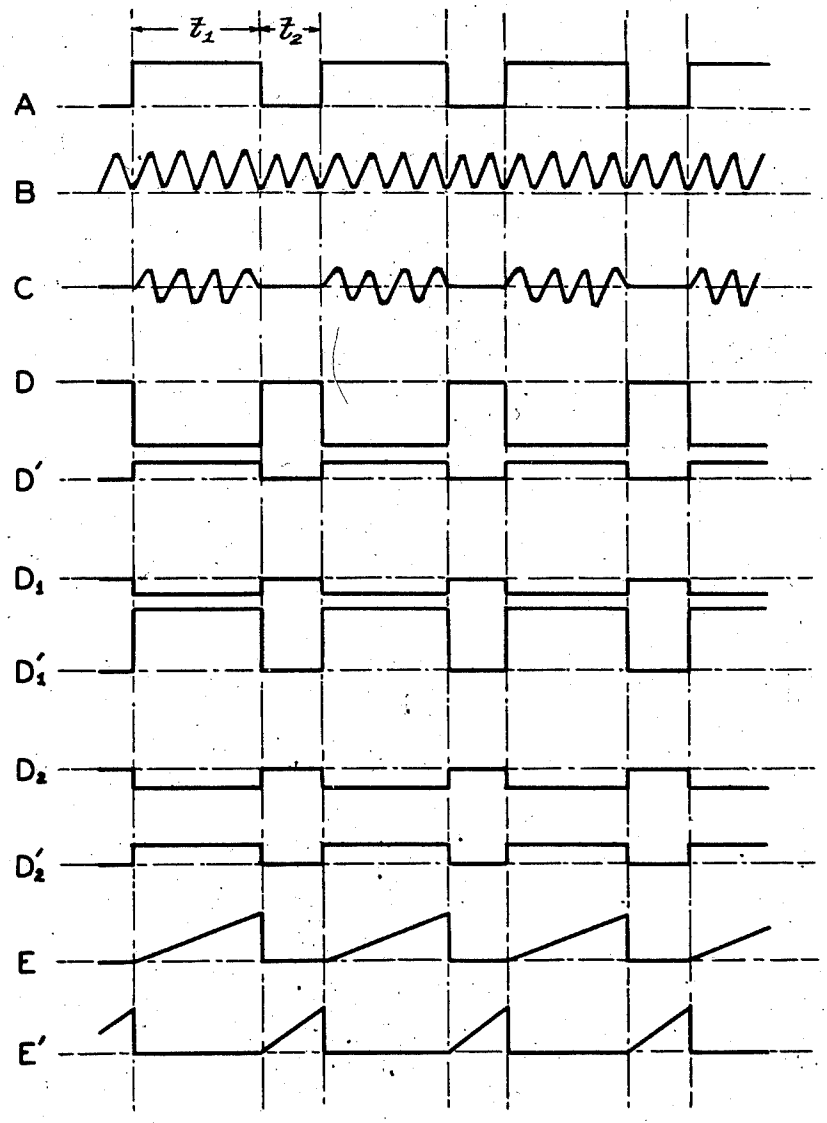

Fig. 5.

INVENTOR
FRANCIS H. SHEPARD JR.
BY Darby & Darby
ATTORNEY

Patented Dec. 7, 1948

2,455,617

UNITED STATES PATENT OFFICE

2,455,617

TELESCRIBER SYSTEM UTILIZING CARRIER TRANSMISSION OF FOUR INTELLIGENCES

Francis H. Shepard, Jr., Madison, N. J., assignor, by mesne assignments, to Remco Electronic, Inc., New York, N. Y., a corporation of New York

Application November 15, 1944, Serial No. 563,569

5 Claims. (Cl. 178—19)

1

In the past when it has been desired to write at a distance, a complex system involving many signals or wires has been needed. Since it is necessary to provide signals to move pen, pencil or stylus in two directions simultaneously and independently, and to lift the stylus up and down, and in addition to shift the paper, it can be seen that four separate functions are necessary. I have devised new and improved means for transmitting these four intelligences over a single carrier.

In the drawings,

Figure 1 is a circuit diagram of a transmitter;

Figures 2, 3 and 4 together constitute a circuit diagram of a receiver; and

Figure 5 is a set of curves illustrating the operation of the device.

This case is related to my copending cases Serial No. 563,567, filed Nov. 15, 1944, now Patent No. 2,419,292; No. 563,568, filed Nov. 15, 1945; No. 499,774, filed Aug. 24, 1943; and No. 563,566, filed Nov. 15, 1944.

Figure 1 shows a multi-vibrator which generates a wave (see curve A, Figure 5) in which function one is represented by time t_1 which is controlled by condenser F_1 shown in Figure 1. Time t_2 (curve A, Fig. 5) represents function 2 which is controlled by condenser F_2, Figure 1. This voltage in a manner described in my Patent No. 2,419,292 modulates a carrier generated in tube 2, shown in curve B, Figure 5, to form the modulated or keyed carrier shown in curve C. Function 3, the lift, is controlled by switch F_3 which shunts condenser C_3 in and out of the carrier generator circuit causing the carrier frequency to vary a predetermined amount. Function 4, paper shift, is initiated by switching on and off the square wave modulation. This can be done by the switch shown, F_4 in Figure 1. In this way the above mentioned four intelligences can be placed on a single carrier, which may be an audio tone suitable for modulating communications transmitters, or it may be the radio frequency of a radio transmitter, or it may be the carrier frequency which may be recorded, or it may be transmitted over telephone lines, power lines, etc.

With reference to Fig. 1, the multivibrator periodically blocks the carrier generated in tube 2. The length of time the carrier is blocked is determined by the value of F_2. The time t_2 (curve A, Figure 5) is, therefore, a function of the value of F_2. The length of time the carrier remains unblocked is determined by the value of F_1. The time t_1, during which carrier is transmitted, is, therefore, a function of the value of F_1. F_4

2

switches off the multivibrator, permitting uninterrupted carrier to be transmitted, and F_3 varies the frequency of the carrier, whether interrupted or not.

At the receiving end the signal, such as is shown in Figure 5, curve C, is received and must be unscrambled to reconstruct the above mentioned intelligences. Figures 2, 3 and 4 are parts of the receiver circuit for accomplishing this.

Referring to Figure 2 it will be noted that the received radio signal is detected and amplified in tube 3 and impressed upon tuned circuits 4 and 5 which are staggered in their tuning. The frequency of timed circuits 4 and 5 correspond to the frequencies of the oscillator 2 of Fig. 1. The amount of voltage built up across each tuned circuit is a function of the frequency of the signal as compared to the tuning of the circuit. This signal voltage of each tuned circuit is rectified and appears across the diode load circuit in the manner shown in Figure 5, curves D, D', D_1, D_1'. In the case of curves D and D' the carrier frequency is near the maximum response of one of the tuned circuits. This results in a greater voltage being rectified by one diode than by the other. When the carrier frequency is near that of the other tuned circuit, the curves shown in D_1 and D_1' follow. The common connection between the two diode loads takes up a potential value which is the average of the potential outputs of the two above mentioned diode circuits. This average D. C. potential is applied directly to the grid of a pen lifter tube 6. (This is F_3.) During writing the carrier frequency is resonant with the tuned circuit 5 so that the average potential is negative with respect to the grid of tube 6. When it is desired to lift the writing pen, the carrier frequency is shifted at the transmitter to be resonant with tuned circuit 4 and the average potential is more positive with respect to the grid of tube 6 thus causing more current to flow in the plate current of said tube thereby resulting in the operation of the pen lifter solenoid F_3. The R. C. circuit of the paper shifter tube F_4 has a longer time constant than t_1 and t_2 of curve A of Fig. 5 so that when the multivibrator wave is interrupted at the transmitting end causing a continuous carrier to be transmitted, the tube draws less plate current releasing the relay contact of F_4. The paper shifter F_4 of Fig. 2 is illustrated as a relay. The purpose of this relay is to trip an automatic paper feed mechanism that feeds additional paper into the writing space upon receipt of a signal from the writer at the transmitting end of a system. The square wave voltages

appearing across the diode load (see curve D and D', D_1 and D_1') are applied to the grids of a limiting amplifier 7 (described in my copending application). The resultant output voltages of this limiting amplifier are shown in Figure 5, curve D_2 and D_2'. The intelligence carried by this particular wave form is similar to the intelligence carried by the wave form described in my Patent No. 2,419,292 referred to above. Methods for unscrambling this intelligence are completely discussed in that case and hence the description will not be repeated here. It is applied to integrators *e* and *e'* described in that case. The necessary phase inversion for the proper operation of the integrators *e* and *e'* is provided by the diode outputs. This is evident by inspection of curves D, D', D_1, D_1' of Figure 5. The voltage outputs from the integrators f_1 and f_2 will have the form shown in curves *e* and *e'*, respectively, in Figure 5.

The unscrambled intelligence takes the form of a voltage appearing across the diode load resistors 11 and 12 (Figure 3), across the peak to peak voltmeter 9, 10. These diode load voltages are compared to the output voltages of potentiometers 13 and 14 and the difference voltage is applied to the grid of one of my follow-up amplifiers (Figure 4) in such a manner as to position the output mechanical mechanism and the position indicating potentiometers 13 and 14 in direct accordance with the diode voltages. The clutches 15 and 16 drive the pointer 17 in one direction or the other, and corresponding clutches responding to f_1 drive pointer 18. The operation of this follow-up device is explained in my copending applications Serial No. 499,774 and Serial No. 563,566 which, therefore, will not be discussed in detail here. Briefly the difference voltage occurring on the lead f_2 is applied to the grid 24 of tube 21. If this voltage is negative the triode section 23, 24, 25 of the tube 21 will draw less plate current and the anode 23 will become more positive. This positive voltage is applied to the grid 30 of tube 22 causing the triode section 29, 30, 31 of tube 22 to draw more plate current thus energizing the clutch 15 and causing it to drive the pointer 17 on the potentiometer 14 in such a direction as to compensate for the signal on f_2. If the signal on lead f_2 is positive, this positive voltage on the grid 24 will cause the triode section 23, 24, 25 of the tube 21 to draw more plate current. This current flowing through the cathode resistor 35 will raise the potential of the cathode 28, which is equivalent to reducing the potential of the grid 26. Consequently, the triode section 26, 27, 28 of the tube 21 will draw less plate current and the anode 27 will become more positive. This positive voltage is applied to the grid 33 of tube 22 causing the triode section 32, 33, 34 of tube 22 to draw more plate current thus energizing the clutch 16 and causing it to drive the pointer 17 on potentiometer 14 in the opposite direction to that in which it was driven by a negative signal on f_2.

It may be seen from the above that means have been provided for transmitting the intelligences necessary for transmitting written messages via wire, radio or any single communication circuit. These intelligences are namely:

1. F_1, horizontal position.
2. F_2, vertical position.
3. F_3, pencil or pen lift.
4. F_4, paper shift.

It will be obvious to those skilled in the art that my invention is capable of various modifications and I do not desire, therefore, to be restricted to the various details shown but only within the scope of the appended claims.

What is claimed is:

1. The method of transmitting four intelligences which comprises translating two of said intelligences into a signal having alternately a marking nature and a spacing nature in which the lengths of the marking state and the spacing state are varied respectively according to said intelligences, translating a third intelligence into a signal indicated by frequency, translating a fourth intelligence into a signal indicated by the absence of the first signal, producing a signal in which the intelligences are merged, transmitting said signal, and detecting and translating said signal to produce separate signals which are functions of the intelligences transmitted.

2. A telescriber comprising means for transmitting four intelligences on a carrier frequency as a single signal, said signal being switched on and off repetitively, the duration of the time on indicating one intelligence, the duration of signal during the time off periods representing a second intelligence, a change of carrier frequency representing a third intelligence and absence of signal interruption representing a fourth intelligence, and means for reproducing from the signal the four intelligences comprising the combination of an amplifier, a pair of frequency sensitive detectors comprising effectively a discriminator coupled to said amplifier, a limiting amplifier coupled to said discriminator, two time integrator circuits coupled to said limiting amplifier, two peak to peak voltmeter circuits one coupled to each of said integrator circuits, two voltages sensitive follow up devices, one coupled to each of said voltmeters, for reproducing the first two intelligences, a voltage relay operating from the discriminator for reproducing the third intelligence, and a voltage relay operated by the absence of signal to reproduce the fourth intelligence.

3. A telescriber receiving device comprising means for reproducing four intelligences from a signal, said signal being switched on and off repetitively, the duration of the time on indicating one intelligence, the duration of the time off a second intelligence, the frequency of the signal during the time on periods representing a third intelligence, and absence of signal interruption representing a fourth intelligence, said means including the combination of an amplifier, and a pair of frequency sensitive detectors coupled to said amplifier, said detectors comprising effectively a discriminator, a limiting amplifier coupled to said discriminator, two time integrator circuits coupled to said limiting amplifier, two peak to peak voltmeter circuits coupled respectively to said integrator circuits, voltage sensitive follow up devices coupled respectively to said voltmeters, for reproducing the first two of said intelligences, a voltage relay operating from the discriminator for reproducing the third of said intelligences and a voltage relay operated by the absence of signal to reproduce the fourth of said intelligences.

4. A telescriber receiver comprising means for receiving a signal conveying four intelligences, said signal comprising a carrier which may be steady, may be blocked and unblocked periodically, and may be varied in frequency, means for translating said signal, a pen lifting device, means responsive to a steady state signal for operating said pen lifting device, a paper shifting device, means responsive to variations in the frequency

of said signal to operate said paper shifting device, a vertical positioning device, a horizontal positioning device, means responsive to the duration of time said signal is unblocked to operate said horizontal positioning device, and means responsive to the duration of time said signal is blocked to operate said vertical positioning device.

5. A telescriber receiver comprising, in combination, signal receiving means, a discriminator, a pen lifter, a paper shifter, and a limiting amplifier coupled to said discriminator, a pair of integrators coupled to said amplifier, a pair of peak voltmeters coupled respectively to said integrators, and a pair of follow-up devices coupled respectively to said voltmeters.

FRANCIS H. SHEPARD, JR.

REFERENCES CITED

The following references are of record in the file of this patent:

FOREIGN PATENTS

Number	Country	Date
483,935	Great Britain	Apr. 28, 1938