June 10, 1930. W. DUBILIER 1,763,554

VARIABLE CONDENSER

Filed July 20, 1922 2 Sheets-Sheet 1

Fig. 1,

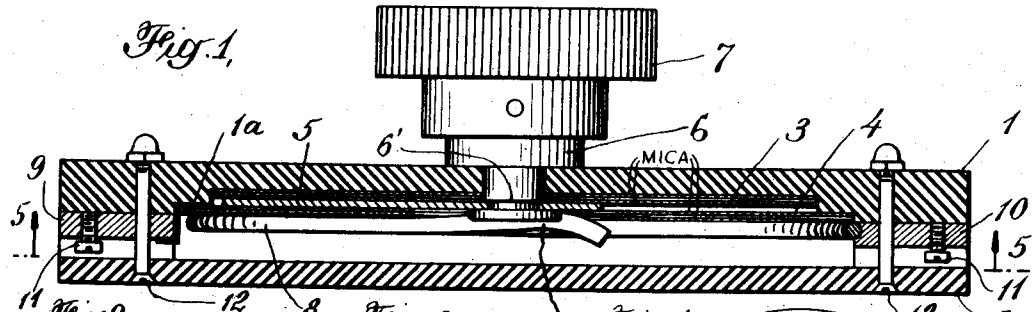

Fig. 2,

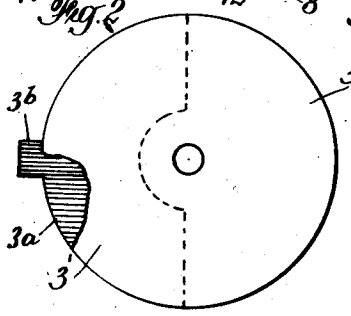

Fig. 3,

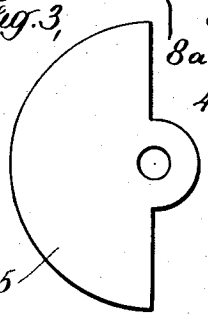

Fig. 4,

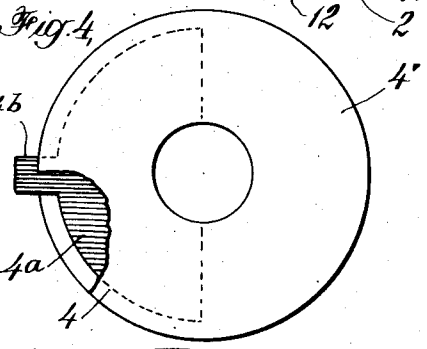

Fig. 5,

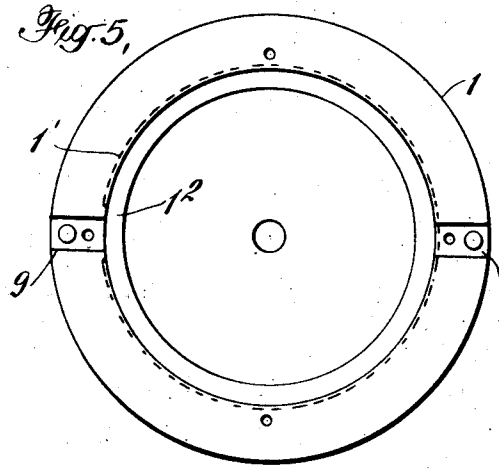

Fig. 6

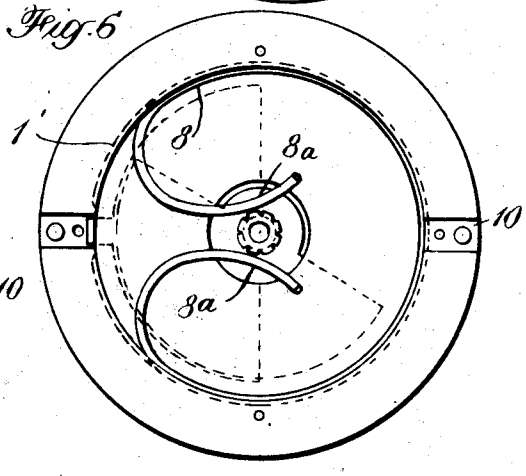

Fig. 7,

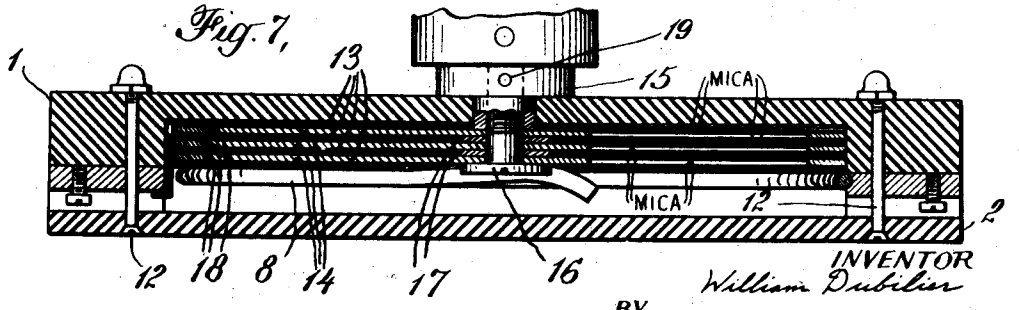

INVENTOR
William Dubilier

BY
Pennie, Davis, Marvin & Edmonds.

ATTORNEYS

June 10, 1930. W. DUBILIER 1,763,554

VARIABLE CONDENSER

Filed July 20, 1922 2 Sheets-Sheet 2

Fig. 8

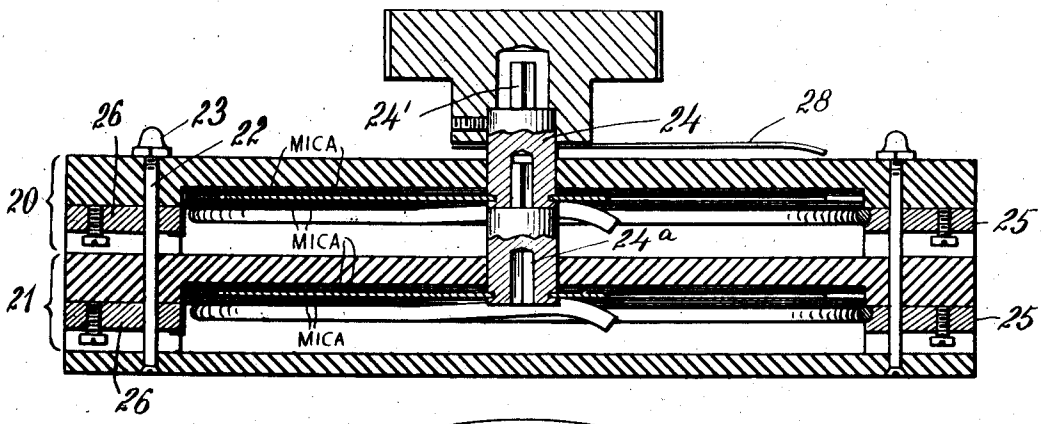

Fig. 9

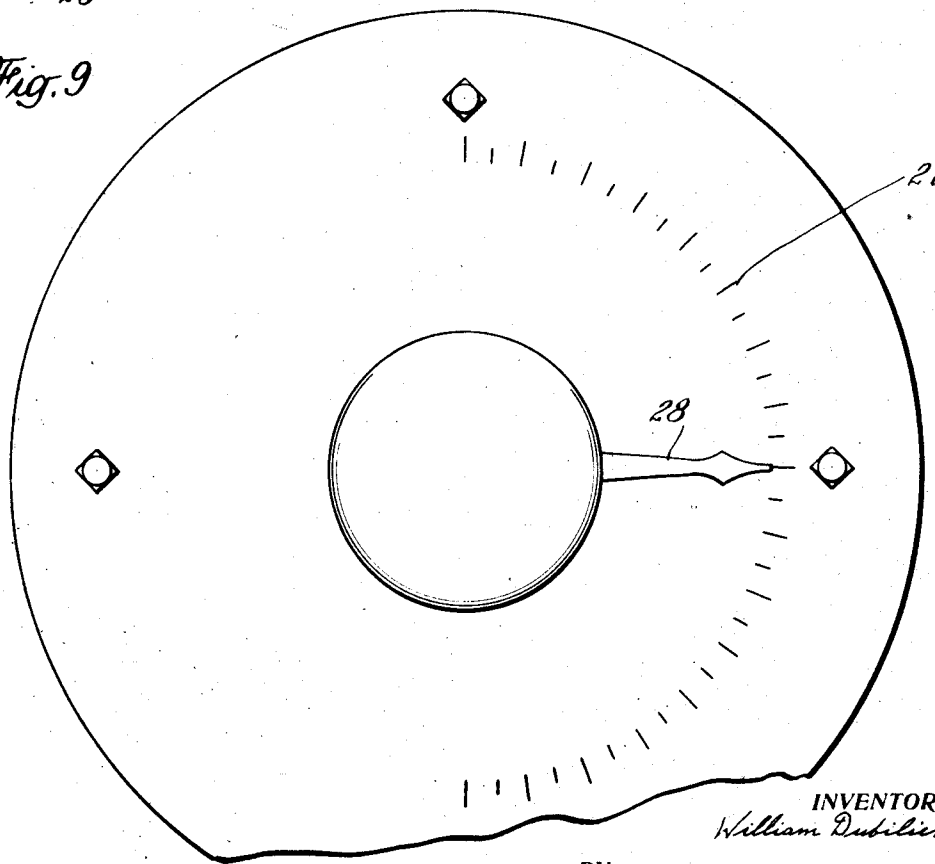

INVENTOR
William Dubilier

BY Pennie, Davis, Marvin & Edmonds

ATTORNEYS

Patented June 10, 1930 1,763,554

UNITED STATES PATENT OFFICE

WILLIAM DUBILIER, OF NEW YORK, N. Y., ASSIGNOR TO DUBILIER CONDENSER CORPORATION, A CORPORATION OF DELAWARE

VARIABLE CONDENSER

Application filed July 20, 1922. Serial No. 576,235.

This invention relates to adjustable or variable electrical condensers, and its objects are: first, to effect a reduction in the dimensions of variable condensers per unit capacity, and second, to provide a variable condenser structure which is economical to manufacture and reliable in operation.

Variable condensers such as have heretofore been employed extensively in the radio art consist, generally, of a series of parallel superposed fixed metal plates between which are interleaved and separated therefrom by air spaces, a series of rotatable plates by which the capacity of the condenser may be varied—usually by turning a knob. Condensers of the aforementioned type are known in the art as variable air condensers.

Due to the fact that the dielectric strength of air is relatively low as compared with some other dielectric substances, it is necessary to provide quite a considerable space between the fixed and rotatable plates, and, furthermore, a problem which continues to subsist in these condensers resides in the matter of adjusting the several rotatable plates with respect to the fixed plates so that the clearance therebetween will be sufficient at all points. This difficulty is one which renders it necessary to provide more space between the fixed plates than might otherwise be necessary. As a result of these controlling factors, variable air condensers are necessarily of much larger size than would otherwise be necessary for a given capacity, for as is well known, the capacitance between a pair of parallel plates varies with different dielectrics and inversely with the separation.

Variable condensers have, heretofore, been constructed with solid dielectric between the plates for the purpose of overcoming the objectionable features of variable air condensers as outlined above, but, in so far as it has been ascertained these latter have not been altogether successful, due, in part, to excessive friction between the rotatable plates and the solid dielectric. Hard rubber or some other dielectric having a relatively high co-efficient of friction has been employed in these condensers

The present invention is based largely on the discovery that sheet mica, which has by nature an exceedingly smooth surface, may be successfully utilized to provide a variable condenser in which the element of friction is so low as to be negligible, while at the same time permitting of a slight pressure being exerted tending to hold the rotatable electrode and the stationary electrodes in close relation. Furthermore, the dielectric strength of mica is several times that of hard rubber and consequently the thickness of the dielectric may be correspondingly less. This factor is of particular advantage in condensers adapted for use with high potentials.

The dielectric constant of mica is of the highest order, thus greatly increasing the capacitance per unit area as compared with air condensers having equivalent separations. A still further advantage in the use of mica is that it may be readily split into extremely thin sheets of uniform thickness.

Another advantage accruing from the use of mica for this purpose is that an almost impalpable dust having extraordinarily good lubricating qualities is formed by abrasion of the surface of the mica after the condenser has been in use for some time, and the presence of this dust greatly reduces further wear, and tends to exclude air from between the contacting surfaces.

In its preferred form, the invention comprises a casing of insulating material having an internal cavity or chamber in which are mounted one or more flexible fixed electrodes, each comprising a pair of thin mica discs between which is interposed a thin sheet of metal foil such as tin foil. Each pair of mica discs is secured together with a suitable adhesive. There is also provided within the casing one or more rotatable flexible metal plates which are interleaved with the aforementioned fixed plates and secured to a shaft which extends through an aperture in the casing and is provided at its outer extremity with a suitable knob for turning.

The mica discs may be of any desired thickness but usually may be of the order of one or two mils. Thus, it will be seen, the fixed electrodes may be quite thin and correspond-

ingly flexible, which enables the fixed and movable plates to conform to any irregularities in their respective surfaces. The rotatable plates are also, preferably, flexible and as thin as mechanical considerations will permit, and may be, in general, of the order of three to six mils in thickness.

On account of the slight separation between the metal foil in the fixed plates, and the rotatable plates, the capacitance per unit area is greatly increased as compared with that of a variable air condenser, and is still further increased by virtue of the fact that the dielectric constant of mica is several times that of air.

Another feature of the invention resides in the fact that the adjacent fixed and movable plates are pressed together with a comparatively slight but sufficient force to exclude substantially all air from between their contacting surfaces, thus further increasing the capacity per unit area.

Still another feature relates to the means employed for retaining the fixed plates within the casing, and for exerting the slight pressure between the fixed and movable plates. This consists of an annular wire spring which seats in a recess provided in the casing, and includes a pair of inwardly projecting portions or fingers which also function as brushes in establishing an electrical connection with the rotatable plate or plates.

A further feature relates to an arrangement whereby any desired number of condenser units may be joined together to form a structure of any desired capacity. This feature is of particular advantage to experimenters and radio amateurs for reasons which are quite obvious.

A still further feature resides in the provision of calibrations applied directly to the condenser casing whereby it is adapted for use without the necessity of mounting on a panel.

The invention will be more clearly understood from the following detailed description having reference to the accompanying drawing, in which

Fig. 1 is an enlarged cross-sectional assembly view of a variable condenser in accordance with this invention in which there is incorporated only one rotatable plate;

Fig. 2 is a plan view of the upper fixed plate of Fig. 1 with a portion of one of the mica discs broken away—this view being shown at one-half the scale of Fig. 1;

Fig. 3 is a plan view of the rotatable metal plate;

Fig. 4 is a plan view of the lower fixed plate of Fig. 1 with a portion of one of the mica discs broken away;

Fig. 5 is a plan view of the upper portion of the condenser casing taken along the line 5—5 of Fig. 1;

Fig. 6 is a view similar to Fig. 5 but including the condenser plates and other parts;

Fig. 7 is a cross-sectional view of an alternative form of variable condenser having a plurality of rotatable plates;

Fig. 8 is a cross-sectional view illustrating another alternative form of variable condenser which is made up by joining together separately operable units; and

Fig. 9 is a plan view of the structure of Fig. 8.

The structure shown in Fig. 1 comprises a casing 1 of hard rubber or any other suitable moulded insulating material, a cover 2 for the casing of the same material, a pair of fixed plates 3 and 4, a thin flexible rotatable metallic electrode 5, a spindle or shaft 6 to which the rotatable plate or electrode 5 is secured, a knob 7 for rotating the shaft 6, and a spring wire retainer 8 for holding the fixed electrodes in place and for exerting the pressure between the fixed and rotatable electrodes.

Each of the fixed plates 3 and 4 consists of a pair of thin flexible circular mica discs 3′ and 4′ secured together with a suitable adhesive and a plate or thin sheet of metal foil 3^a and 4^a interposed between the mica discs. These latter are preferably semi-circular in form as shown in Figs. 2 and 4, and are provided with pig-tails 3^b and 4^b for connecting with the metal terminal block 9 to which they are soldered. The total thickness of each of the fixed plates ranges from three to six mills and is preferably not in excess of the latter figure. Terminal blocks 9 and 10 are dovetailed in slots in the casing 1 and are provided with screws 11 for making outside connections.

The rotatable plate 5 may be of brass and is of approximately three to six mils in thickness. It is mounted on the shaft 6 and rigidly secured against the shoulder 6′—the end of the shaft 6 being headed up with the plate 5 in place, as is clearly shown in Fig. 1. The spring wire retainer 8 is sprung into a groove 1′ in the casing 1 in which position it bears against the under side of the fixed plate 4 thereby holding the latter in place. Fixed plate 3 is, preferably, of smaller diameter than 4 and a recess of a depth slightly less than the thickness of plates 3 and 5 together is provided in the casing in which these plates are seated. The peripheral portion of the fixed plate 4 rests on the shoulder 1^a. This provides a convenient arrangement for spacing the fixed plates. The spring wire retainer 8 is soldered to the terminal block 10. This retainer is provided with a pair of inwardly projecting portions or fingers 8^a, the ends of which make contact with the rotatable plate 5 thus establishing an electrical connection between the rotatable plate 5 and the terminal block 10. By reason of the shoulder 1^a being slightly shallower than the combined thickness of fixed plate 3

and movable plate 5, fixed plate 4 is pressed against movable plate 5 and the latter against fixed plate 3 resulting in a slight but sufficient pressure between their adjacent surfaces to substantially exclude any air therebetween. Cover plate 2 is secured to the casing 1 by means of flat head screws 12.

In the alternative structure of Fig. 7 there are four fixed plates 13 and three rotatable plates 14, the latter being secured to the shaft 15 by means of screw 16 which is prevented from turning with respect to shaft 15 by pin 19. The rotatable plates 14 are suitably spaced by metal washers 17, and the fixed plates are spaced by rings 18 of insulating material. The thickness of washers 17 and rings 18 is preferably so gauged that the fixed and movable plates are in contact and under slight pressure. Otherwise, the structure of Fig. 7 is substantially identical with that of Fig. 1.

Figure 8 illustrates a condenser structure comprising two duplicate units 20 and 21, the former being superimposed upon the latter. Each of these units has a rotatable plate and two fixed plates of the type previously described and the two units are held together by bolts 22 and nuts 23. The shafts 24, to which the rotatable plates 25 are secured, are each provided with a squared shank 24′ which is designed to fit in a socket 24^a of the adjoining shaft. These shafts are, therefore, revolubly joined, as will be quite evident; and the rotatable plates are electrically connected through the shafts. A better connection may, however, be made between the rotatable plates by wiring the terminal blocks 25 together. The fixed plates may be connected by wiring the terminal blocks 26 together. Any number of units may be combined in the manner here described to provide the desired capacity, and it is not essential that the several units be identical. Some of the units may be of large capacity and others of small capacity.

The top of each unit 20, 21, as well as the tops of the casings 1 of Figs. 1 and 7, may be, and are preferably, provided with a calibrated scale 27, and a pointer 28 for registering with the calibrated scale may be attached to the knob. This provision makes it convenient to operate the condenser independently of its being mounted on a panel.

As will be seen in the construction shown on Figure 8 the casing comprises sections, each section containing one set of fixed and rotatable plates, and the shaft of one unit projects out of the shaft of the section, enclosing it into engagement with the shaft of the adjacent unit.

Owing to the inherent resiliency of the fixed and rotatable plates they conform quite readily to any surface irregularities in each other thus maintaining a minimum spacing between the sheets of metal foil 3^a, 4^a and the rotatable plates, and at the same time eliminating any inordinate obstruction to the movement of the rotatable plates due to slight misalignment and the like.

Fine mica dust may be sprinkled on the friction surfaces of the plates before the condenser is assembled to provide initial lubrication, but if omitted it will soon accumulate from abrasion of the surfaces of the mica discs. The mica dust not only functions as a lubricant, but it tends to fill any air spaces between the plates, and since its dielectric constant is much higher than air, the result is an increase in unit capacity.

My condenser can be used to give a desired capacity by adjustment and retain such capacity by allowing the parts to remain in the required position. For example, in Figure 1, the movable plate 5 in combination with the fixed plate 3, or the two fixed plates 3 and 4 together, can be set for any needed capacity by turning the plate 5 till it reaches the point where the wished for capacity is obtained. The pressure between the surface of the plate 5 and either fixed plate 3 and 4 may, of course, have any value necessary to retain the plate 5 in its adjusted position, while permitting it to be moved in contact with the insulation covering either of the fixed plates.

I claim:

1. In a variable condenser, a thin fixed electrode element comprising a sheet of metal foil and a sheet of thin mica, a thin rotatable electrode element in superposed relation to said sheet of mica, and means for gently pressing said elements together, said electrode elements being sufficiently flexible so that their adjacent surfaces make contact at substantially all points, the pressure between said electrode elements being insufficient to effect any excessive obstruction to the movement of said rotatable electrode element.

2. In a variable condenser, a casing defining a chamber, a fixed flexible plate mounted in said chamber, said fixed plate comprising a pair of thin dielectric discs and a sheet of metallic foil interposed between said discs, a rotatable flexible metallic plate mounted in said chamber in superposed relation to said fixed plate, and means for rotating said rotatable plate.

3. In a variable condenser, a casing refining a chamber, a plurality of fixed plates mounted in said chamber, spring means for retaining said fixed plates in said chamber, one or more rotatable plates interleaved with said fixed plates, and means for rotating said rotatable plates.

4. In a variable condenser, a casing defining a chamber, a pair of fixed plates mounted in said chamber in superposed relation, a rotatable plate interposed between said fixed plates, a terminal, and an annular retaining spring for said fixed plates, said retaining spring being connected to said terminal and

having a portion contacting with said rotatable plate.

5. In a variable condenser, a casing defining a chamber, a pair of fixed plates mounted in said chamber in superposed relation, a rotatable plate interposed between said fixed plates, and an annular retaining spring for said fixed plates, said retaining spring having a pair of inwardly extending fingers contacting with said rotatable plate.

6. In a variable condenser, a casing defining a chamber, a pair of fixed plates mounted in said chamber in superposed relation, a rotatable plate interposed between said fixed plates, a terminal on said casing, and an annular retaining spring for said fixed plates, said retaining spring being secured in a groove in said casing and connected to said terminal, and having an inwardly projecting portion, the end of which makes contact with said rotatable plate near the axis of rotation thereof.

7. In a variable condenser, a plurality of self-contained interchangeable condenser units each comprising at least one fixed plate and one rotatable plate, and a shaft for each rotatable plate, said shafts being adapted to interlink whereby they are rotatable jointly, and means for connecting said units together in superposed relation, said means comprising a casing in sections, each section enclosing one of said units.

8. In a variable condenser, a casing, condenser units within said casing, each unit comprising a fixed plate and a rotatable plate in superposed relation, and a shaft for each rotatable plate, each end portion of said shaft being adapted to engage the opposite end of another similar shaft whereby both shafts may be rotatably joined, the casing being in sections each of which encloses one of said units.

9. A variable condenser unit comprising, a casing, condenser units within said casing, each including a fixed plate and a rotatable plate in superposed relation, and means whereby said rotatable plate is rotatably joined with the rotatable plate of another similar unit when said unit is superposed on such similar unit, the casing being in sections, each section enclosing one of said units.

10. A variable condenser unit comprising, a casing, condenser units within said casing, each including a fixed plate and a rotatable plate in superposed relation, and a shaft for each rotatable plate, said shaft having a projecting portion at one end and a recess at the other end portion, said projecting portion being adapted to engage the recess in the shaft of a similar unit whereby both said shafts are rotatable together and non-rotatable with respect to each other, the casing being in sections, each of which encloses one of said units.

11. A condenser comprising a fixed electrode element, a movable electrode element, a sheet of mica between said elements and permanently overlying substantially the entire surface of one of said elements, and means for maintaining the other element in sliding contact with said mica as said movable element is actuated, the mica permitting rubbing engagement of one of said elements with the mica as said condenser is adjusted.

12. A condenser comprising a fixed electrode element, a movable electrode element, a sheet of mica between said elements and permanently overlying substantially the entire surface of the fixed element, and means for maintaining the movable element in sliding contact with said mica as said movable element is actuated, the mica permitting rubbing engagement of one of said elements with the mica as the condenser is adjusted.

13. In a condenser, a fixed electrode element comprising a plate of conductive material and a sheet of mica thereover, a rotatable electrode element in superposed relation to said sheet of mica, and means for pressing said elements together, one of said elements being flexible so that their adjacent surfaces may make insulated contact at substantially all points, the pressure between said elements holding them in such contact but permitting movement of said rotatable electrode element, to adjust the capacity of the condenser.

14. In a condenser, a fixed electrode element comprising a plate of conductive material and a sheet of insulation thereover, a rotatable electrode element in superposed relation to said sheet of insulation, and means for pressing said elements together, one of said elements being flexible so that the adjacent surfaces of said elements can make insulated contact at substantially all points, the pressure between said elements maintaining such contact, while permitting movement of said rotatable element, to adjust the capacity of the condenser.

In testimony whereof I affix my signature.

WILLIAM DUBILIER.