(12) INTERNATIONAL APPLICATION PUBLISHED UNDER THE PATENT COOPERATION TREATY (PCT)

(19) World Intellectual Property Organization
International Bureau

(43) International Publication Date
27 July 2017 (27.07.2017)

WIPO | PCT

(10) International Publication Number
WO 2017/125596 A1

(51) International Patent Classification:
A01K 31/00 (2006.01) *A01K 41/00* (2006.01)
A01K 31/18 (2006.01) *A01K 45/00* (2006.01)
A01K 39/014 (2006.01)

(21) International Application Number:
PCT/EP2017/051271

(22) International Filing Date:
23 January 2017 (23.01.2017)

(25) Filing Language: English

(26) Publication Language: English

(30) Priority Data:
2016135 21 January 2016 (21.01.2016) NL

(71) Applicant: **HATCHTECH GROUP B.V.** [NL/NL]; Postbus 256, 3900 AG Veenendaal (NL).

(72) Inventor: **METER, Tjitze**; Houtvesterlaan 19, 3903 DH Veeendaal (NL).

(74) Agent: **NEDERLANDSCH OCTROOIBUREAU**; P.O. Box 29720, 2502 LS The Hague (NL).

(81) Designated States *(unless otherwise indicated, for every kind of national protection available)*: AE, AG, AL, AM, AO, AT, AU, AZ, BA, BB, BG, BH, BN, BR, BW, BY, BZ, CA, CH, CL, CN, CO, CR, CU, CZ, DE, DJ, DK, DM, DO, DZ, EC, EE, EG, ES, FI, GB, GD, GE, GH, GM, GT, HN, HR, HU, ID, IL, IN, IR, IS, JP, KE, KG, KH, KN, KP, KR, KW, KZ, LA, LC, LK, LR, LS, LU, LY, MA, MD, ME, MG, MK, MN, MW, MX, MY, MZ, NA, NG, NI, NO, NZ, OM, PA, PE, PG, PH, PL, PT, QA, RO, RS, RU, RW, SA, SC, SD, SE, SG, SK, SL, SM, ST, SV, SY, TH, TJ, TM, TN, TR, TT, TZ, UA, UG, US, UZ, VC, VN, ZA, ZM, ZW.

(84) Designated States *(unless otherwise indicated, for every kind of regional protection available)*: ARIPO (BW, GH, GM, KE, LR, LS, MW, MZ, NA, RW, SD, SL, ST, SZ, TZ, UG, ZM, ZW), Eurasian (AM, AZ, BY, KG, KZ, RU, TJ, TM), European (AL, AT, BE, BG, CH, CY, CZ, DE, DK, EE, ES, FI, FR, GB, GR, HR, HU, IE, IS, IT, LT, LU, LV, MC, MK, MT, NL, NO, PL, PT, RO, RS, SE, SI, SK, SM, TR), OAPI (BF, BJ, CF, CG, CI, CM, GA, GN, GQ, GW, KM, ML, MR, NE, SN, TD, TG).

Published:

— *with international search report (Art. 21(3))*

WO 2017/125596 A1

(54) Title: METHOD OF FEEDING HATCHED CHICKS IN A CLIMATE CHAMBER

Fig. 2

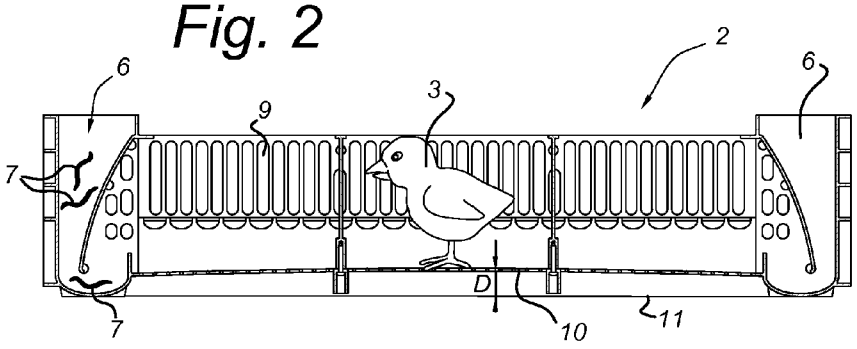

(57) Abstract: The invention relates to a method of feeding hatched chicks in a climate chamber during a first stage of life from hatching, the method comprising; a) controlling the temperature and humidity in the climate chamber, b) operating a ventilation means to generate an air flow through the climate chamber, and c) supplying the newly hatched chicks with live feed in the climate chamber.

Method of feeding hatched chicks in a climate chamber

Background

The present invention relates to a method of feeding hatched chicks in a climate chamber during a first stage of life from hatching, the method comprising;

a) controlling the temperature and humidity in the climate chamber,

b) operating a ventilation means to generate an air flow through the climate chamber.

Such a climate chamber is known from WO2011/133022 A1.

Summary of the invention

The invention aims to provide a more natural start for young chicks in an industrial environment like a climate chamber.

Another object of the invention is to improve a method of feeding hatched chicks in a climate chamber in that a problem with known methods is at least partly solved.

Yet another object of the invention is to provide an alternative method of feeding hatched chicks in a climate chamber.

According to a first aspect of the invention this is realized with a method of feeding hatched chicks in a climate chamber during a first stage of life from hatching, the method comprising;

a) controlling the temperature and humidity in the climate chamber,

b) operating a ventilation means to generate an air flow through the climate chamber, and

c) supplying the newly hatched chicks with live feed in the climate chamber.

The supplying of the newly hatched chicks with live feed in the climate chamber stimulates natural behaviour of the young chicks. This will result in an improved quality of the young chicks. This improved quality will have a positive effect during the rest of the life of the chick.

In an embodiment of the invention, the live feed comprises insects and/or worms. In particular the live feed comprises one or more of the group earthworms, larvae, silkworms, mealworms and combinations thereof. Conceivable types of insects are black soldier fly larvae, housefly larvae, silkworms, and yellow mealworms.

In other words, the live feed comprises living insects and/or living worms. This is attractive for the chickens at least because these living insects and living worms are self moving as perceived by the newly hatched chicken. Living insects and living worms are examples of self moving live feed. In general, the self moving live feed stimules natural behaviour of the young chicks. Therefore, food intake is improved.

In an embodiment of the invention, the first stage of life comprises the first 1 to 4 days of life and the method comprises;

d) transferring newly hatched chicks to the climate chamber within the first 1 to 4 days of life before supplying the newly hatched chicks with live feed in the climate chamber.

In an embodiment of the invention, the climate chamber is transportable and the method comprises;

e) performing step c) during transport of the climate chamber.

Supplying the newly hatched chicks with live feed in the climate chamber during transport improves chick quality even during transport of the chicks. Transport steps between a hatchery and a breeding farm normally have a negative effect on animal wellbeing.

In an embodiment of the invention, the method comprises;

f) transferring newly hatched chicks to the transportable climate chamber.

In an embodiment of the invention, the method comprises before performing step c);

g) arranging eggs in the climate chamber, and

h) incubating the eggs in the climate chamber till hatching occurs.

This is even more beneficial for chick quality since handling of eggs and/or newly hatched chicks is reduced to a minimum.

In an embodiment of the invention, the climate chamber comprises a climate chamber compartment and at least step c) is performed in the climate chamber compartment. The division of the climate chamber into compartments helps to industrialize and standardize the process steps of the method.

In an embodiment of the invention, the climate chamber comprises a crate for accommodating a group of young chicken, like a group consisting of 40 to 100 young chicken wherein the step c) comprises supplying the newly hatched chicks with live feed in the crate and wherein the crate is preferably arranged in the climate chamber compartment. This even more helps to industrialize and standardize the process steps of the method. In addition, it reduces handling of individual eggs and/or newly hatched chicks.

In an embodiment of the invention, the climate chamber comprises one or more troughs and step c) comprises containing the live feed in the one or more troughs.

In an embodiment of the invention, the one or more troughs comprises means for maintaining the live feed contained in the one or more troughs. This prevents unwanted spread of live feed through the climate chamber. These means are desireable since the live feed may want to climb out of the trough.

As will be clear, climbing out of the trough of the live feed is possible because the live feed is self moving live feed.

In an embodiment of the invention, the means for maintaining the live feed contained in the one or more troughs comprises one or more selected from a grating, an edge with a sloped section, a concave section as seen from an interior of the trough, an edible enclosure that surrounds the live feed, and a trough interior surface having a surface structure to impede climbing of live feed out of the trough. The sloped section hinders climbing of live feed out of the trough. The surface structure that impedes climbing out of the trough may differ between types of live feed.

In an embodiment of the invention, the crate is provided with ventilation openings on two opposite sides of the crate in order to allow the air flow through the climate chamber to pass the crate.

In an embodiment of the invention, the method further comprises i) providing a stack of a number of said crates.

In an embodiment of the invention, the climate chamber comprises a feed supply conduit coupled with crates, in particular all of the number of crates, and step c) comprises transport of live feed through the feed supply conduit. This facilitates the supply of live feed to all chicks in the climate chamber.

In an embodiment of the invention, at least one side of the climate chamber or the at least one chamber compartment is delimited by a heat exchanger. In particular the climate chamber comprises at least two of said chamber compartments which are separated from one another by the heat exchanger. The heat exchanger helps to control the temperature in a chamber compartment by exchange of heat between the exchanger and the air flow through the climate chamber.

According to a further aspect of the invention this is realized with a climate chamber for rearing newly hatched chicks, the climate chamber comprising one or more troughs having means for maintaining live feed contained in the one or more troughs. This reduces the possibility of unwanted spread of live feed through the climate chamber.

In an embodiment of the climate chamber, the means for maintaining the live feed contained in the one or more troughs comprises one or more selected from a grating, an edge with a sloped section, a concave section as seen from an interior of the trough, an edible enclosure that surrounds the live feed, and a trough interior surface having a surface structure to impede climbing of live feed out of the trough.

In an embodiment of the invention, the climate chamber contains chicks and the at least one or more troughs contains live feed.

In an embodiment of the invention, the climate chamber comprises a crate for accommodating a group of young chicken, and the at least one or more troughs is arranged within the crate and forms part of the crate. It will be clear that within the crate may include a trough that is partly within the outline of the crate. The trough is part of the crate and accesible from within the crate. It is however also conceivable that the trough is part of the climate chamber and accesible from within the crate.

The invention further relates to a device comprising one or more of the characterising features described in the description and/or shown in the attached drawings.

The invention further relates to a method comprising one or more of the characterising features described in the description and/or shown in the attached drawings.

The various aspects discussed in this patent can be combined in order to provide additional advantageous advantages.

Description of the drawings

The invention relates to hatching and feeding of newly hatched birds in a controlled environment during their first one or two days or some days thereafter. Industry practice is to provide newly hatched birds with no additional food at all. Occasionnaly, food may be provided that however may not be perceived as attractive in a natural way to the newly hatched birds.

According to the invention, newly hatched birds are provided with live feed, like mealworms. This type of feed leads to more natural environment as perceived by the bird.

The invention will be further elucidated referring to the drawings wherein shown in:

Fig. 1 in perspective view a climate chamber for hatching chicks according to the method of the invention;

fig. 2 a cross sectional side view of a crate for use in the climate chamber of fig. 1;

fig. 3a and 3b embodiments of the trough, of the crate according to fig. 2;

fig. 4 a stack of crates for use in the climate chamber of fig. 1;

fig. 5 a side view of transportable climate chamber;

fig. 6 a stack of another embodiment of crates;

fig. 7-10; different embodiments of a trough for use in a crate of fig. 2 of 6.

Detailed description of embodiments

Fig. 1 shows in perspective view a climate chamber 1 for hatching chicks 3 according to the method of the invention. The climate chamber 1 is configured to control the temperature and humidity in the climate chamber such that newly hatched chicks can be fed in the climate chamber 1. The climate chamber 1 comprises a ventilation means 5 to generate an air flow A, Ar through the climate chamber 1.

The climate chamber 1 has a bottom wall, a top wall (not shown), a front and rear side wall and a first and a second end wall that enclose the interior of the climate chamber 1 to allow a recirculating air flow. The climate chamber 1 comprises a number of heat exchangers 3 for heating or cooling the climate chamber 1. The temperature of the climate chamber is controlled through heat exchange between the air flow and the heat exchangers 3. The heat exchangers 3 are air-permeable to allow the air flow to pass the heat exchangers 3.

Here, the climate chamber 1 is subdivided into climate chamber compartments 4. The air flow A flows from the ventilations means 5 through all climate chamber compartments 4 and returns through a corridor or passageway back to the ventilation means 4. Such a climate chamber compartment 4 is configured to match the dimensions of a stack 13 of crates 2. Such a stack 13 is normally handled with a trolley (not shown).

Fig. 2 shows a cross sectional side view of a crate 2 for use in the climate chamber 1 of fig. 1. The crate 2 is configured for accommodating a group of young chicken 3, like a group consisting of 40 to 100 young chicken. The crate 2 is stackable.

Therefore, the bottom face 11 can be placed on top of another crate 2. The chick 3 rests on a floor element 10. The crate 2 comprises a trough 6. Here, the crate 2 has two troughs 6. The two troughs are arranged at opposite sides of the crate 2. The trough 6 contains live feed 7 in order to supply the newly hatched chicks 4 with live feed 7 in the crate 2. The live feed may comprises insects and/or worms, in particular one or more of the group earthworms, larvae, silkworms, mealworms and combinations thereof.

Fig. 3a and 3b show each an embodiment of a trough 6 of the crate 2 according to fig. The trough 6 of fig. 3b is subdivided by a partition element 8. The partition element 8 divides the trough 6 such that there is an intake opening 39 for filling the trough and an outlet opening, different from the intake opening, from which outlet opening the chicks can take their food.

Fig. 4 shows a stack 13 of crates 2 for use in the climate chamber of fig. 1. In particular the stack 13 is placed in a climate chamber compartment 4. Here, the stack 13 adjoins a heat exchanger 3. In this case, the troughs 6 are arranged with the heat exchanger 3 and the troughs 6 are accessible by the chicks 3 from the interior of the crate 2.

The crates 2 shown in the figures 2 – 4 are used in the following way in the method of feeding hatched chicks 3 in a climate chamber 1 during a first stage of life from hatching. Hatched chicks 3 are placed in the interior of the crate 2. These newly hatched chicks are transferred to the climate chamber 1 by placing the crate 2, in particular a stach 13 of crates into the climate chamber 1. These newly hatched chicks are transferred to the climate chamber 1 within the first 1 to 4 days of life, in particular as soon as possible after hatching. The chicks 3 are supplied with live feed 7 in the climate chamber 1. Therefore, the live feed 7 is placed in troughs 6. The live feed 7 contains e.g. mealworms. These troughs can be part of the crate 2, see fig. 2-3, and/or part of the climate chamber 1, see fig. 4.

As an option the climate chamber is transportable. Fig. 5 shows a side view of a transportable climate chamber designed as a trailer 14. The trailer 14 comprises

ventilation means 15 to drive an air flow 16 that runs through compartments and heat exchangers 17. The compartments and heat exchangers 17 are schematically shown.

In use, the trailer 14 travels while the interior of the trailer is filled with stacks of crates 2. It is conceivable that both type of crates 2 as shown in fig. 2-4 and fig. 6 can be transported with the trailer 14.

Fig. 6 shows a stack of another embodiment of crates 2. An egg tray 18 is shown in assembly with a crate 2. Here, a stack of two assemblies of a crate 2 and an egg tray 18 is depicted. The crate 2 provides a chicken accommodation space 22 for hatching and rearing chicken. The crate 2 comprises troughs 6 at opposite sides of the crate 2. The, here separate, egg tray 18 is arranged on top of the crate 2. The crate 2 has an open top such that a chicken may enter the chicken accommodation space 22 through a passage 21. The tray 18 contains a number of eggs 19. The tray 18 comprises a number of egg accommodation spaces 20. In this space 20 the eggs 19 are firmly held such that the eggs 19 may be hatched in a controlled manner. The tray 1 has a number of passages 21 for a chicken through which passage 21 a chicken hatched from an egg 19 may pass through the tray 18 and enter the chicken accommodation space 22 located below the tray 18.

The crates 2 shown in figure 6 differ in use with the crates 2 of figures 2-4 in that the chicks hatch directly above the crate 2 and make their own way into the interior 22 of the crate 2. Therefor, the step of transfer of newly hatched chicks from outside to the inside of the climate chamber 1 is not required. Instead, eggs are transferredi into the inside of the climate chamber 1.

In fig. 7-10 different embodiments of a troughs for use in a crate of fig. 2 or 6 are shown. Al the troughs 6 have a bottom 12 to support the live feed 7, and an inner 27 and outer 28 side wall. Here, the trough 6 is subdivided by wall elements 26. All the troughs 6 comprise means for maintaining the live feed 7 contained in the trough 6. The troughs 6 differ in the type of means for maintaining the live feed 7 contained in the trough 6, as will be explained.

Fig. 7 shows a grating 23 to maintain the live feed 7 in the trough 6. The grating 23 has openings 24 and ribs 25 between the openings 24. As an example a wall

elements 26 has a trough interior surface 41 having a surface structure to impede climbing of live feed out of the trough. The surface structure is schematically depicted and can be obtained for example when manufacturing the interior surface, or by tooling or coating the interior surface.

Fig 8 shows opposite trough walls 27, 28 each provided with a respective sloped section 29, 30 to maintain the live feed 7 in the trough 6. These sloped sections 29, 30 narrow the outlet opening 40.

Fig 9 shows opposite trough walls 27, 28 each provided with a respective sloped section 32, 34 to maintain the live feed 7 in the trough 6. These sloped sections 32, 34 are arranged with a respective projection 31, 33.

Fig 10 shows opposite trough walls 27, 28 each provided with a respective concave section (36, 37) as seen from an interior of the trough 6 to maintain the live feed 7 in the trough 6. These concave section 36, 37 are arranged with a respective projection 31, 33.

Fig 3A schematically shows as a dashed line an edible enclosure 38 that surrounds the live feed 7 to maintain the live feed 7 in the trough 6.

It will also be obvious after the above description and drawings are included to illustrate some embodiments of the invention, and not to limit the scope of protection. Starting from this disclosure, many more embodiments will be evident to a skilled person which are within the scope of protection and the essence of this invention and which are obvious combinations of prior art techniques and the disclosure of this patent.

Claims

1. Method of feeding hatched chicks (3) in a climate chamber (1) during a first stage of life from hatching, the method comprising;
    a) controlling the temperature and humidity in the climate chamber,
    b) operating a ventilation means (5) to generate an air flow through the climate chamber, and
    c) supplying the newly hatched chicks with live feed (7) in the climate chamber.

2. Method according to claim 1, where the live feed comprises insects and/or worms.

3. Method according to claim 2, wherein the live feed comprises one or more of the group earthworms, larvae, silkworms, mealworms and combinations thereof.

4. Method according to a preceding claim, wherein the first stage of life comprises the first 1 to 4 days of life and the method further comprises;
    d) transferring newly hatched chicks to the climate chamber within the first 1 to 4 days of life before supplying the newly hatched chicks with live feed in the climate chamber.

5. Method according to a preceding claim, wherein the climate chamber is transportable and the method further comprises;
    e) performing step c) during transport of the climate chamber.

6. Method according to claim 5, wherein the method comprises;
    f) transferring newly hatched chicks to the transportable climate chamber.

7. Method according to a preceding claim, wherein the method further comprises before performing step c);
    g) arranging eggs in the climate chamber, and

h) incubating the eggs in the climate chamber till hatching occurs.

8. Method according to a preceding claim, wherein the climate chamber comprises a climate chamber compartment (4) and at least step c) is performed in the climate chamber compartment.

9. Method according to a preceding claim, wherein the climate chamber comprises a crate (2) for accommodating a group of young chicken, like a group consisting of 40 to 100 young chicken wherein the step c) comprises supplying the newly hatched chicks with live feed in the crate

10. Method according to claim 9, wherein the crate is arranged in the climate chamber compartment.

11. Method according to a preceding claim, wherein the climate chamber comprises one or more troughs (6) and step c) comprises containing the live feed in the one or more troughs.

12. Method according to claim 11, wherein the one or more troughs comprises means (23) for maintaining the live feed contained in the one or more troughs.

13. Method according to claim 12, wherein the means for maintaining the live feed contained in the one or more troughs comprises one or more selected from a grating (23), an edge with a sloped section (29, 30, 32, 34), a concave section (36, 37) as seen from an interior of the trough, an edible enclosure (38) that surrounds the live feed, and a trough interior surface (41) having a surface structure to impede climbing of live feed out of the trough.

14. Method according to a preceding claim 9-13, wherein the crate is provided with ventilation openings (9) on two opposite sides of the crate in order to allow the air flow through the climate chamber to pass the crate.

15. Method according to a preceding claim 9-14, further comprising step i) providing a stack (13) of a number of said crates.

16. Method according to a preceding claim 9-15, wherein the climate chamber comprises a feed supply conduit coupled with crates, in particular all of the number of crates, and step c) comprises transport of live feed through the feed supply conduit.

17. Method according to a preceding claim 8-16, wherein at least one side of the climate chamber or the at least one chamber compartment is delimited by a heat exchanger (3).

18. Method according to a preceding claim 17, in which the climate chamber comprises at least two of said chamber compartments (4) which are separated from one another by the heat exchanger.

19. Climate chamber for rearing newly hatched chicks, the climate chamber comprising one or more troughs having means for maintaining live feed contained in the one or more troughs.

20. Climate according to claim 19, wherein the means for maintaining the live feed contained in the one or more troughs comprises one or more selected from a grating (23), an edge with a sloped section (29, 30, 32, 34), a concave section (36, 37) as seen from an interior of the trough, an edible enclosure (38) that surrounds the live feed, and a trough interior surface (41) having a surface structure to impede climbing of live feed out of the trough.

21. Climate chamber according to claim 19 or 20, the climate chamber containing chicks and the at least one or more troughs containing live feed.

22. Climate chamber according to a preceding claim 19-21, wherein the climate chamber comprises a crate for accommodating a group of young chicken, and the at least one or more troughs is arranged within the crate and forms part of the crate.

5

-o-o-o-o-o-o-

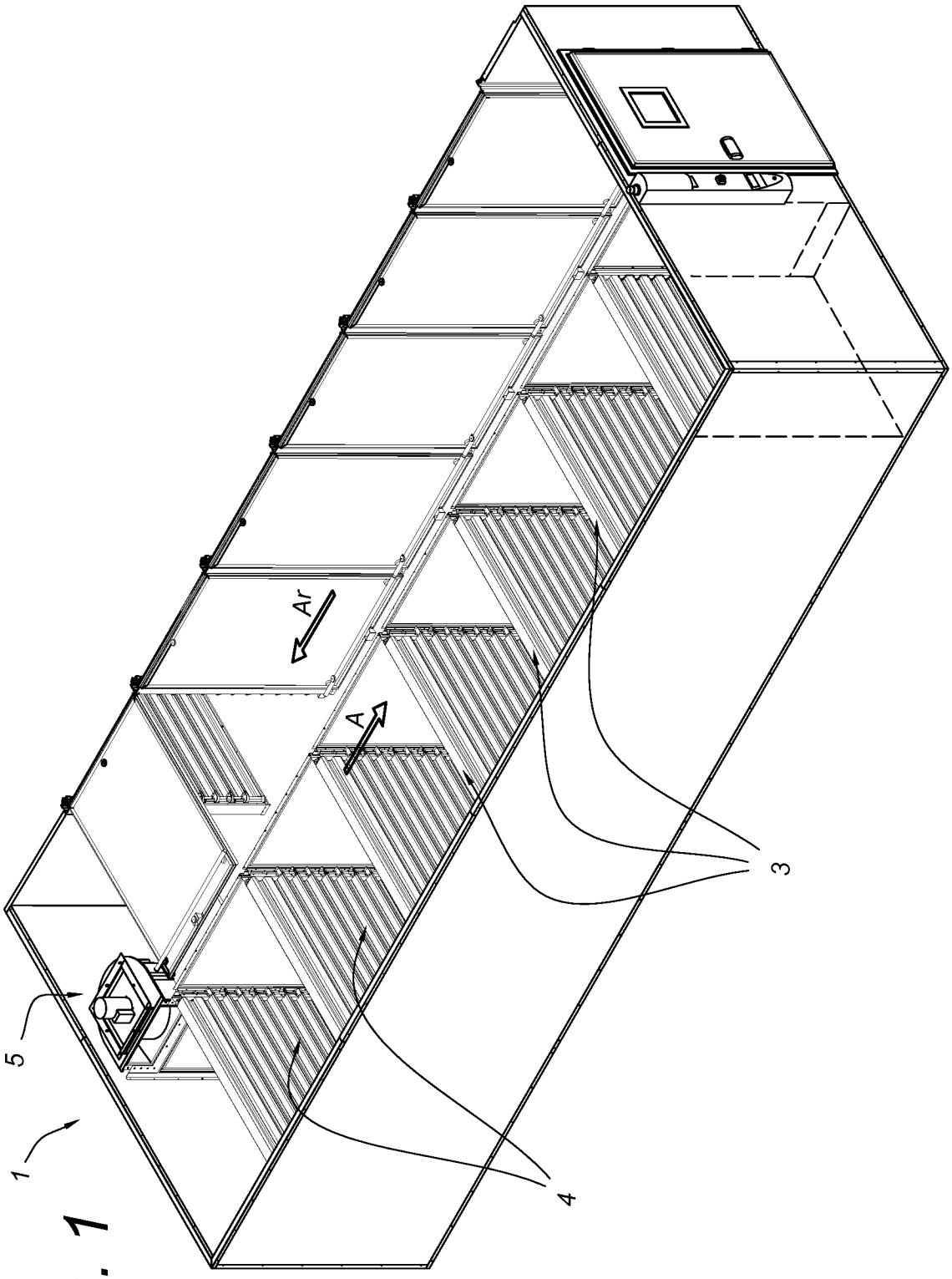

Fig. 1

Fig. 2

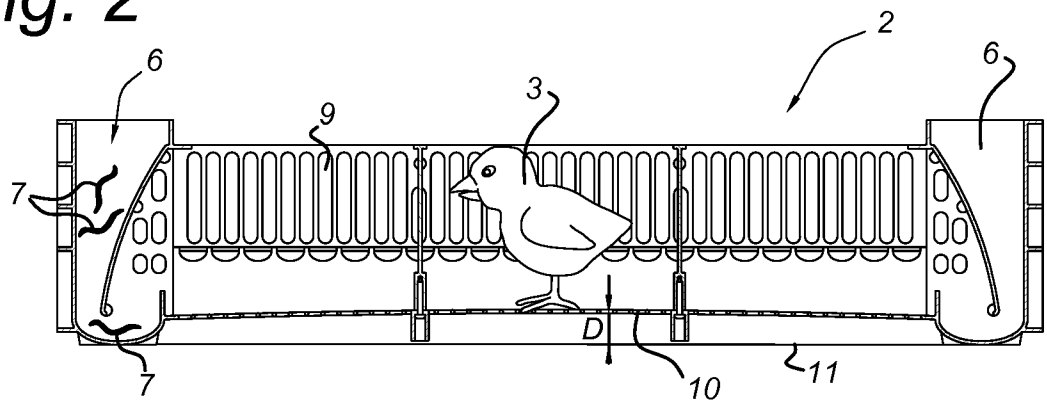

Fig. 3A

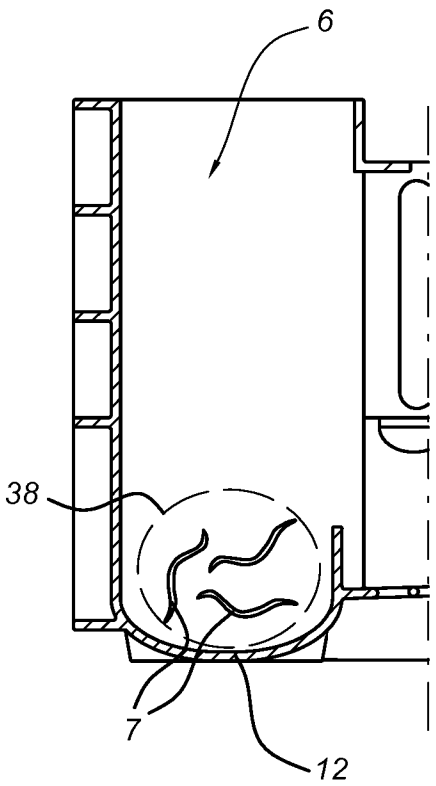

Fig. 3B

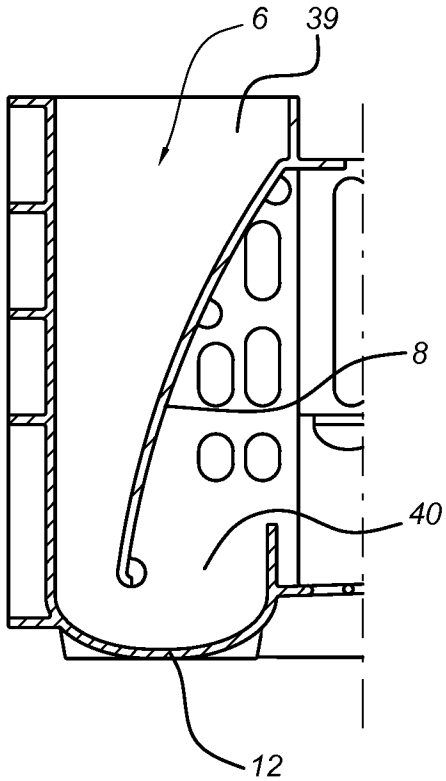

Fig. 4

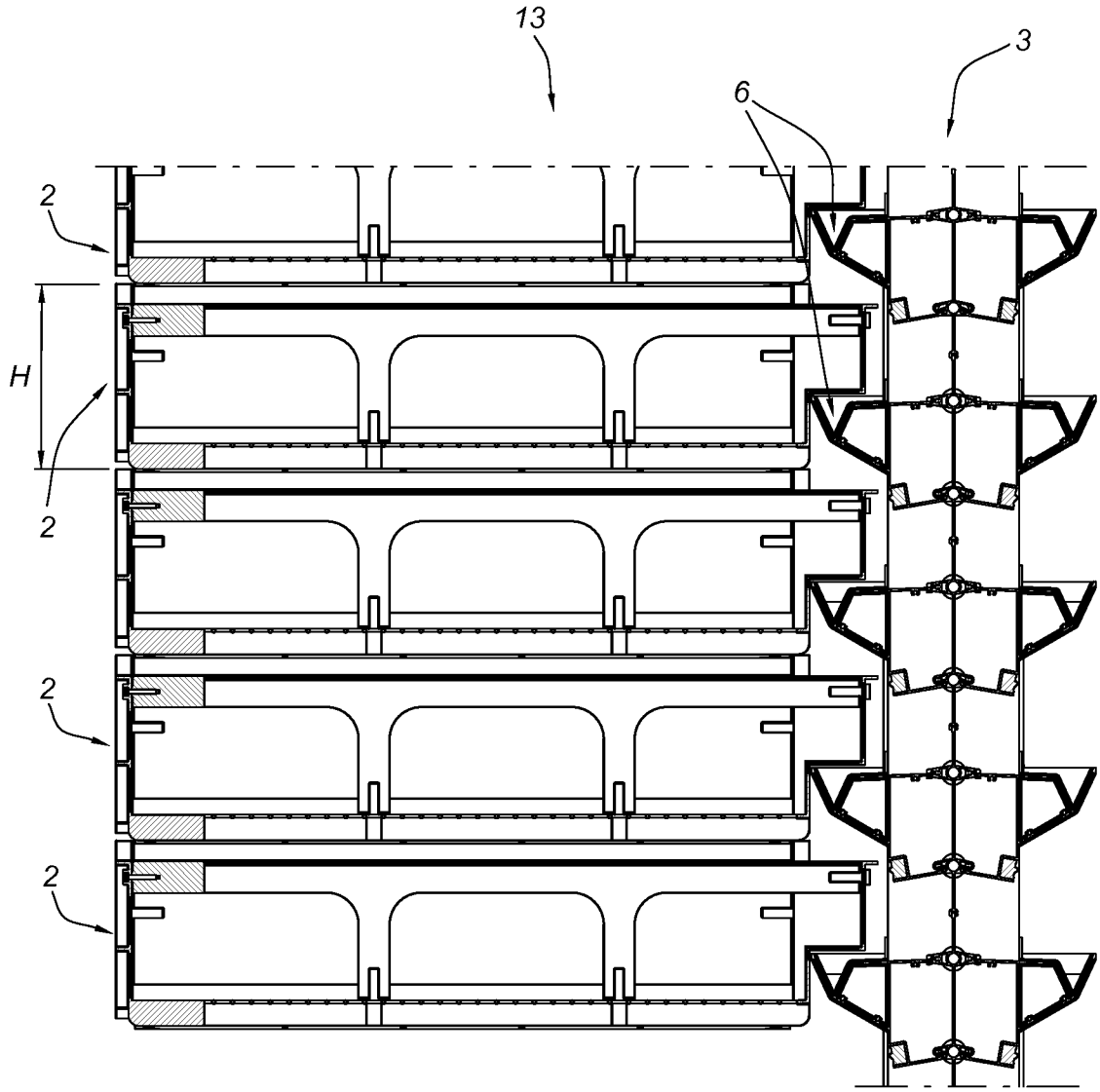

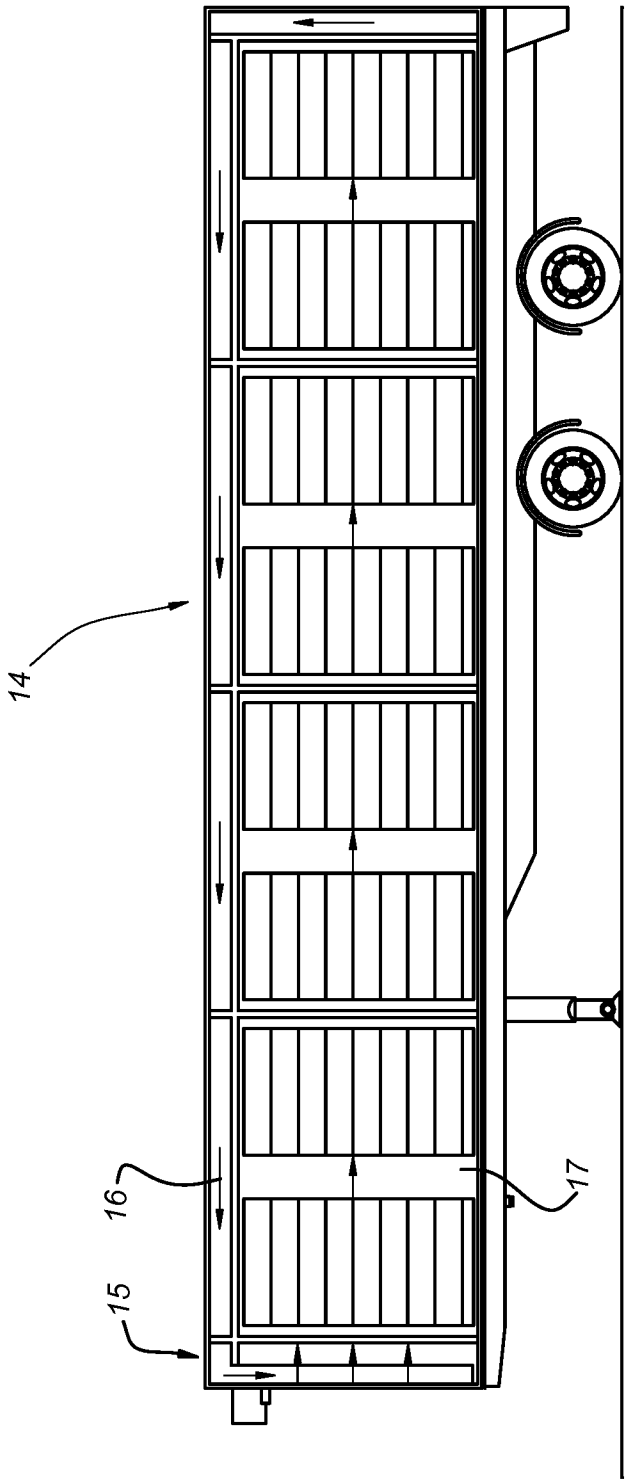

Fig. 5

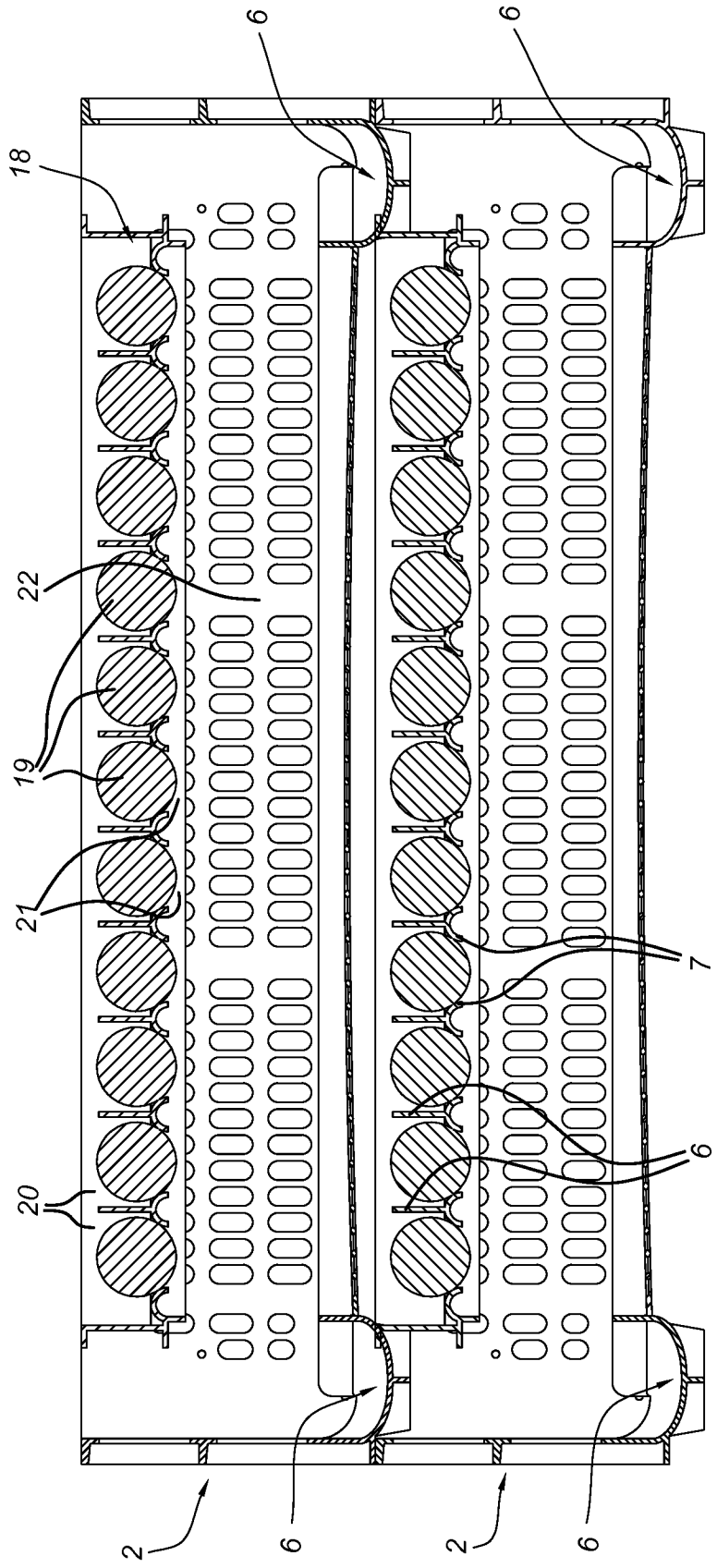

Fig. 6

Fig. 7

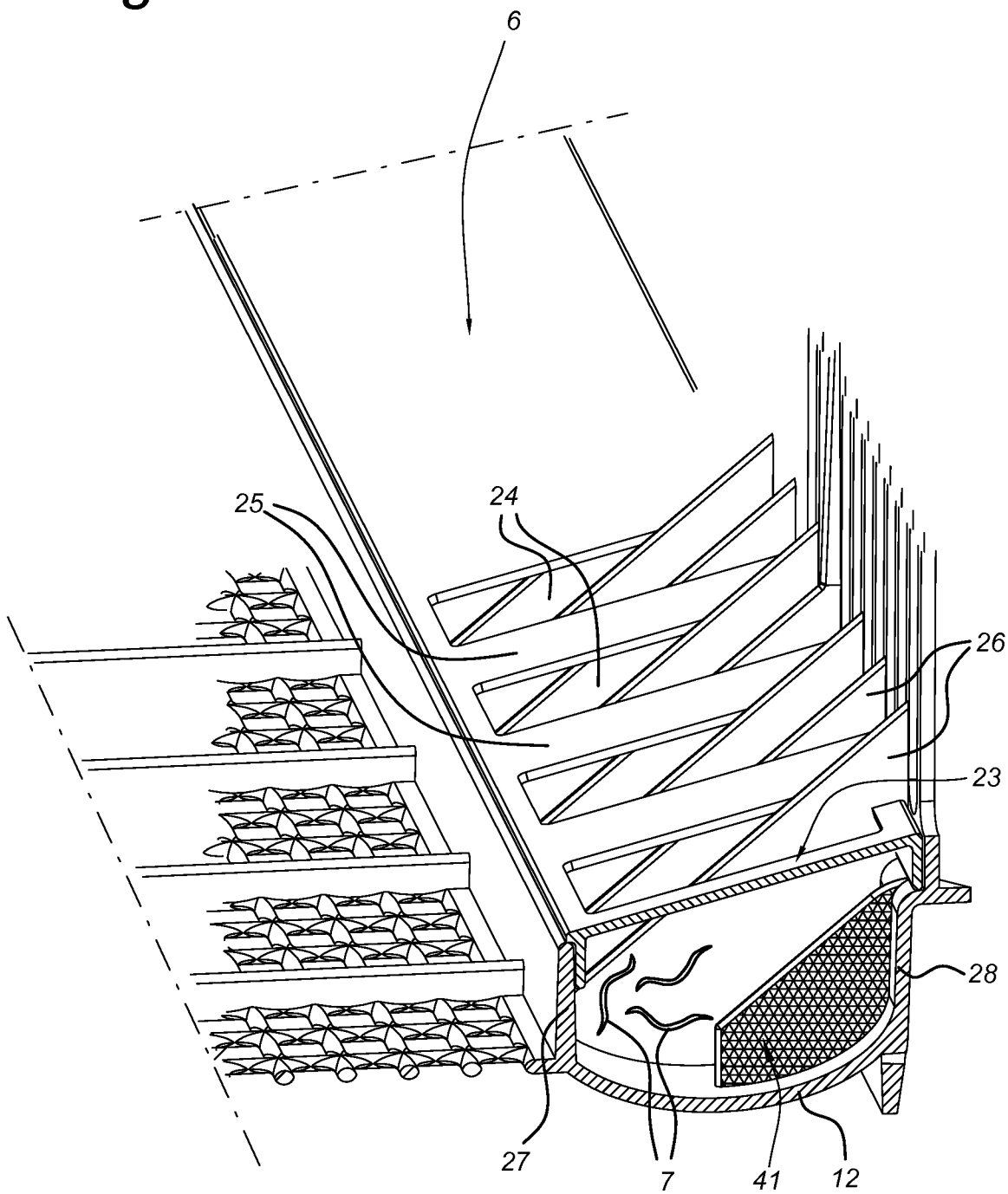

Fig. 8

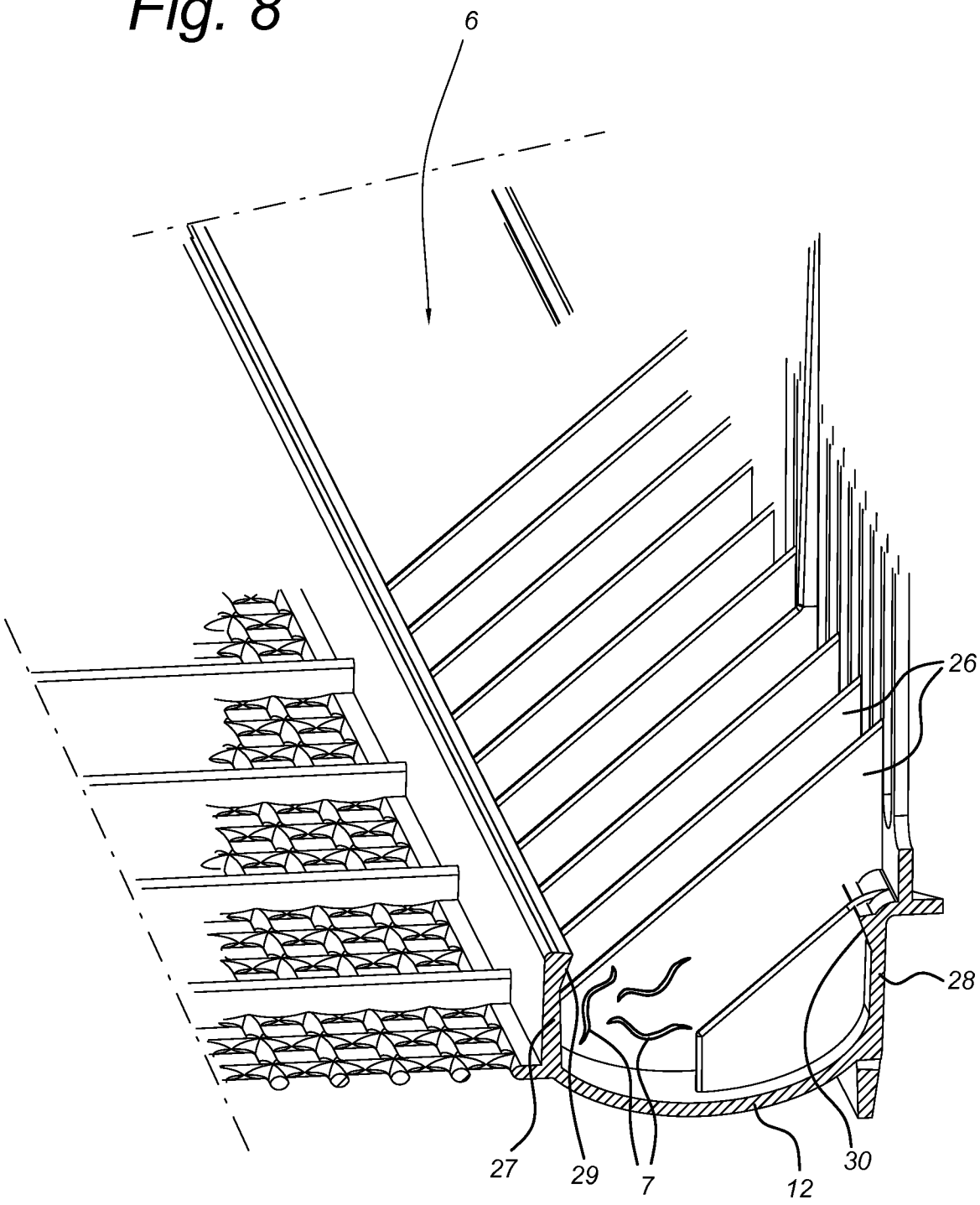

Fig. 9

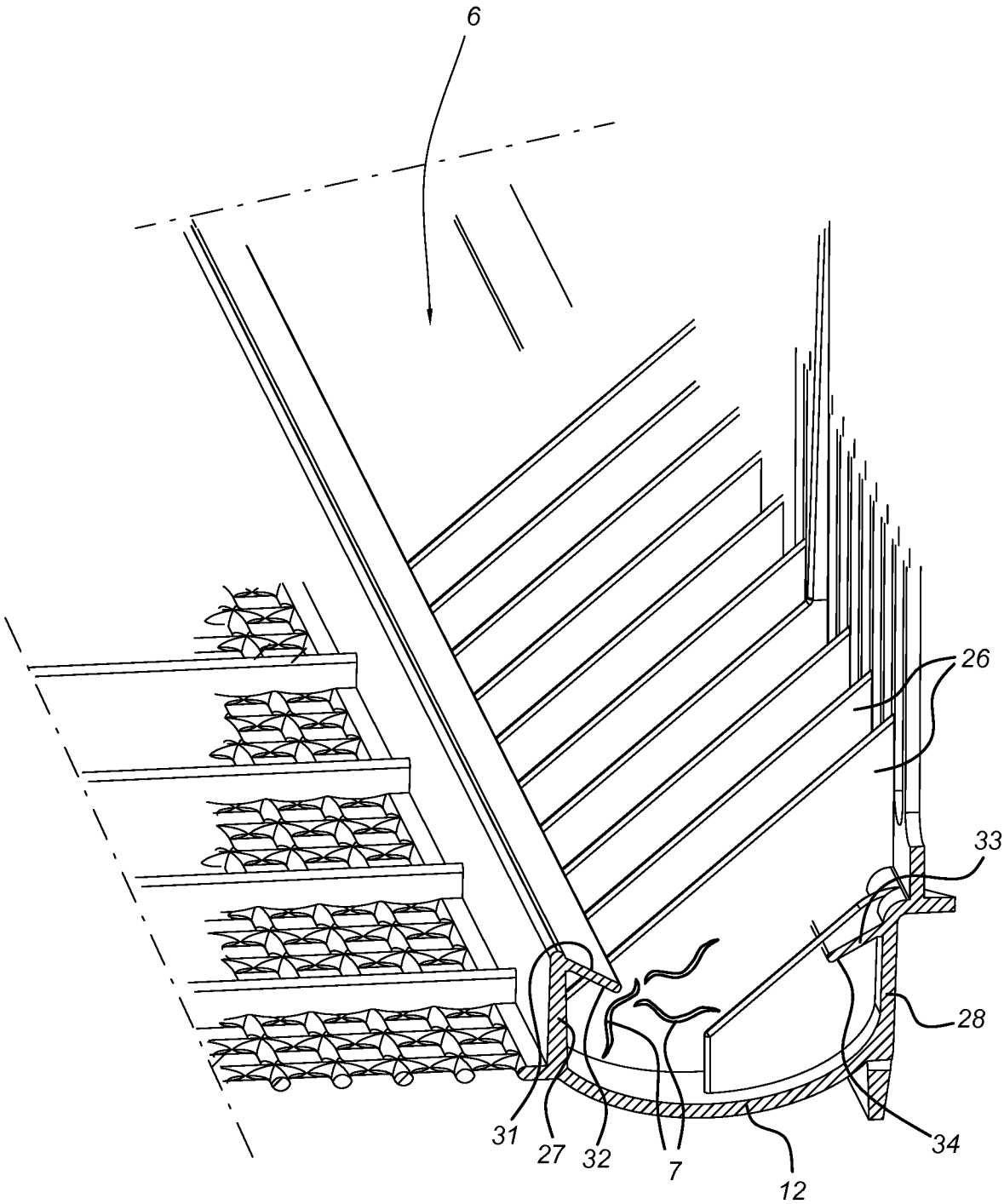

Fig. 10

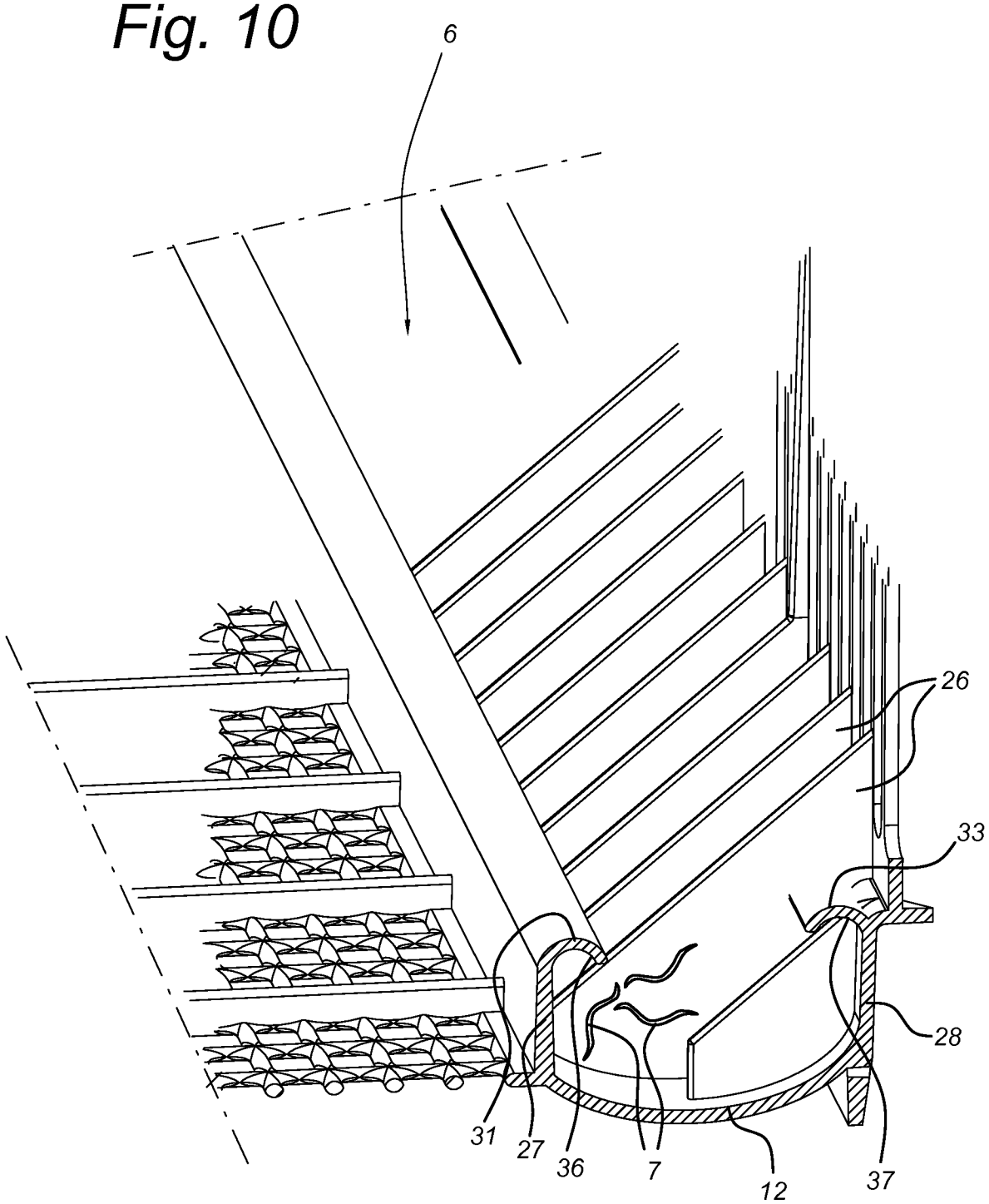

INTERNATIONAL SEARCH REPORT

International application No
PCT/EP2017/051271

A. CLASSIFICATION OF SUBJECT MATTER
INV. A01K31/00 A01K31/18 A01K39/014 A01K41/00 A01K45/00
ADD.

According to International Patent Classification (IPC) or to both national classification and IPC

B. FIELDS SEARCHED

Minimum documentation searched (classification system followed by classification symbols)
A01K A23K

Documentation searched other than minimum documentation to the extent that such documents are included in the fields searched

Electronic data base consulted during the international search (name of data base and, where practicable, search terms used)
EPO-Internal, WPI Data

C. DOCUMENTS CONSIDERED TO BE RELEVANT

Category*	Citation of document, with indication, where appropriate, of the relevant passages	Relevant to claim No.
Y	WO 2011/133020 A1 (HATCHTECH GROUP BV [NL]; METER TJITZE [NL]) 27 October 2011 (2011-10-27) abstract page 13, line 27 - page 14, line 6; figures 1-8	1-22
Y	GB 2 489 994 A (DODSON & HORRELL LTD [GB]) 17 October 2012 (2012-10-17) abstract pages 2-9	1-22
A	EP 1 310 163 A1 (ITOCHU FEED MILLS CO LTD [JP]) 14 May 2003 (2003-05-14) paragraphs [0013], [0015] - [0041]; figures 1-7	1-22

-/--

[X] Further documents are listed in the continuation of Box C.

[X] See patent family annex.

* Special categories of cited documents :

"A" document defining the general state of the art which is not considered to be of particular relevance

"E" earlier application or patent but published on or after the international filing date

"L" document which may throw doubts on priority claim(s) or which is cited to establish the publication date of another citation or other special reason (as specified)

"O" document referring to an oral disclosure, use, exhibition or other means

"P" document published prior to the international filing date but later than the priority date claimed

"T" later document published after the international filing date or priority date and not in conflict with the application but cited to understand the principle or theory underlying the invention

"X" document of particular relevance; the claimed invention cannot be considered novel or cannot be considered to involve an inventive step when the document is taken alone

"Y" document of particular relevance; the claimed invention cannot be considered to involve an inventive step when the document is combined with one or more other such documents, such combination being obvious to a person skilled in the art

"&" document member of the same patent family

Date of the actual completion of the international search	Date of mailing of the international search report
2 February 2017	17/02/2017

Name and mailing address of the ISA/	Authorized officer
European Patent Office, P.B. 5818 Patentlaan 2 NL - 2280 HV Rijswijk Tel. (+31-70) 340-2040, Fax: (+31-70) 340-3016	von Arx, Vik

1

Form PCT/ISA/210 (second sheet) (April 2005)

INTERNATIONAL SEARCH REPORT

International application No
PCT/EP2017/051271

C(Continuation). DOCUMENTS CONSIDERED TO BE RELEVANT

Category*	Citation of document, with indication, where appropriate, of the relevant passages	Relevant to claim No.
A	US 3 396 703 A (TRUSSELL HARRY B) 13 August 1968 (1968-08-13) the whole document -----	1-22
A	WO 02/34039 A1 (KUIJPERS CORNELIUS JOHANNES MA [NL]; KUIJPERS PAULUS HENDRIK MARIA [NL) 2 May 2002 (2002-05-02) abstract page 12, line 3 - page 13, line 9; figures 1-4 -----	1-22

1

INTERNATIONAL SEARCH REPORT

Information on patent family members

International application No
PCT/EP2017/051271

Patent document cited in search report	Publication date	Patent family member(s)	Publication date
WO 2011133020 A1	27-10-2011	AU 2010351630 A1	08-11-2012
		BR 112012026828 A2	12-07-2016
		CN 102946720 A	27-02-2013
		EP 2560480 A1	27-02-2013
		RU 2012149237 A	27-05-2014
		US 2013104809 A1	02-05-2013
		WO 2011133020 A1	27-10-2011
GB 2489994 A	17-10-2012	NONE	
EP 1310163 A1	14-05-2003	CA 2418449 A1	05-02-2003
		EP 1310163 A1	14-05-2003
		ES 2355955 T3	01-04-2011
		JP 4791622 B2	12-10-2011
		JP 2002051663 A	19-02-2002
		US 2004035368 A1	26-02-2004
		WO 0215679 A1	28-02-2002
US 3396703 A	13-08-1968	NONE	
WO 0234039 A1	02-05-2002	AT 328475 T	15-06-2006
		AU 1440502 A	06-05-2002
		DE 60120510 T2	23-11-2006
		EP 1414291 A1	06-05-2004
		ES 2260304 T3	01-11-2006
		NL 1016479 C2	01-05-2002
		WO 0234039 A1	02-05-2002