T. McA. KNOX & F. W. BROCKHOFF.

COIN CONTROLLED SWITCH FOR ELECTRIC CIRCUITS.

APPLICATION FILED AUG. 31, 1912.

1,087,300. Patented Feb. 17, 1914.

2 SHEETS—SHEET 1.

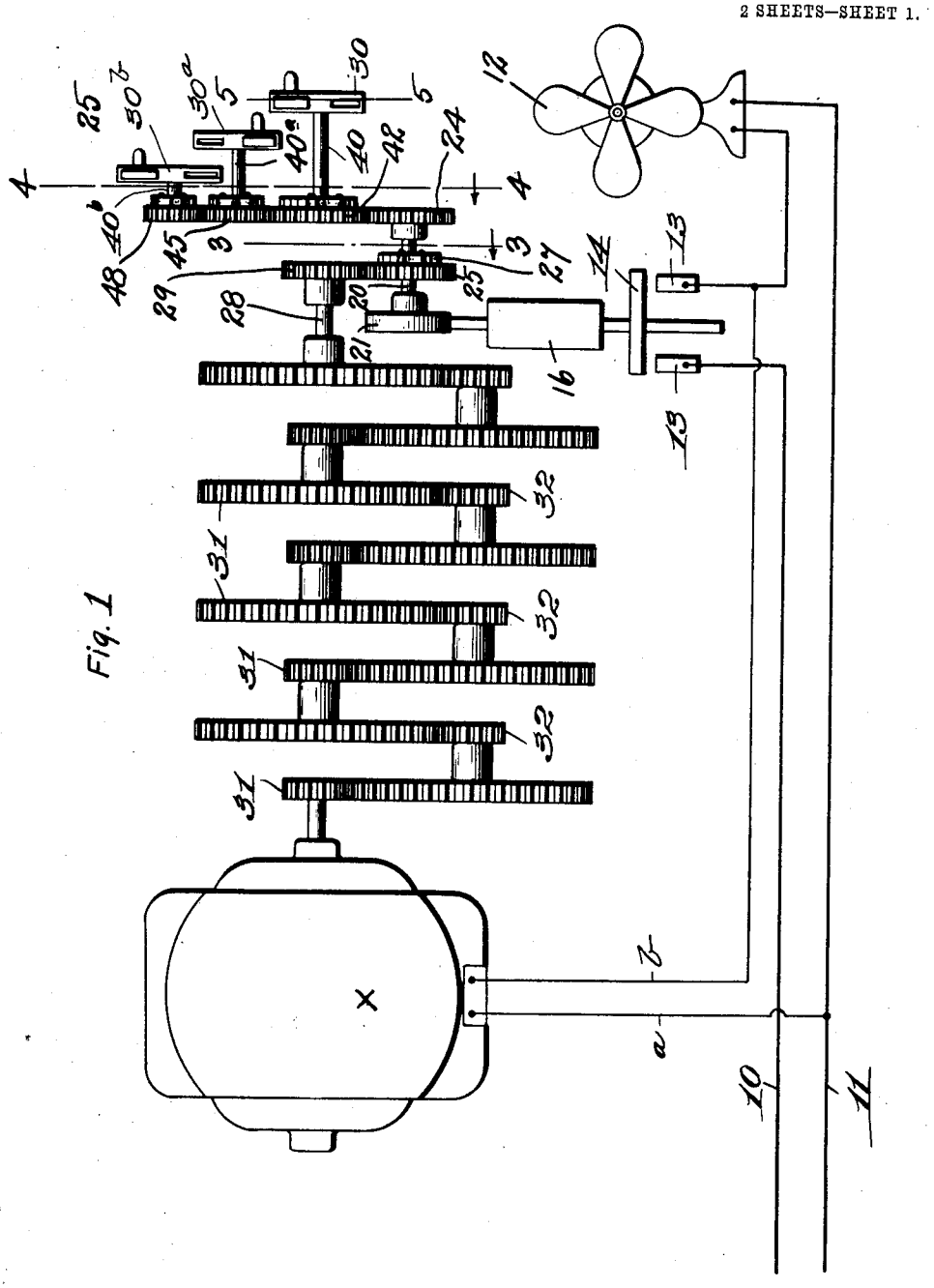

Fig. 1

Witnesses

Wm. Janus

W. P. Smith

Inventors

Thomas McA. Knox

Fredrick W. Brockhoff

By F. R. Cornwall. Att'y

T. McA. KNOX & F. W. BROCKHOFF.

COIN CONTROLLED SWITCH FOR ELECTRIC CIRCUITS.

APPLICATION FILED AUG. 31, 1912.

1,087,300.

Patented Feb. 17, 1914.

2 SHEETS—SHEET 2.

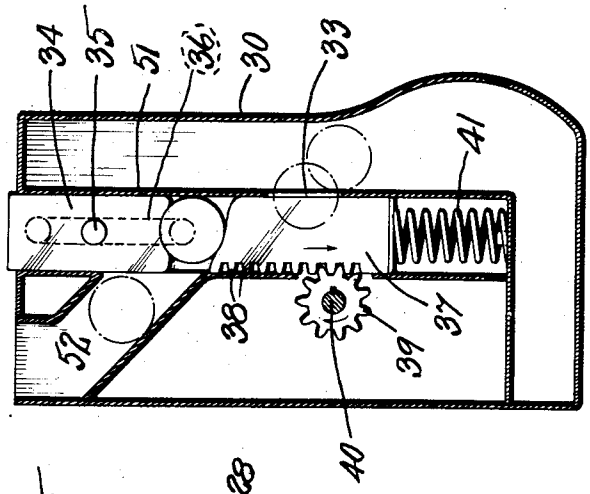

Fig. 5

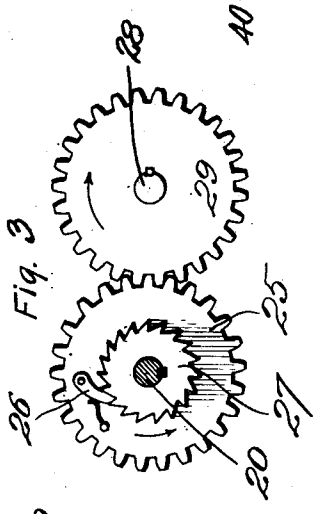

Fig. 3

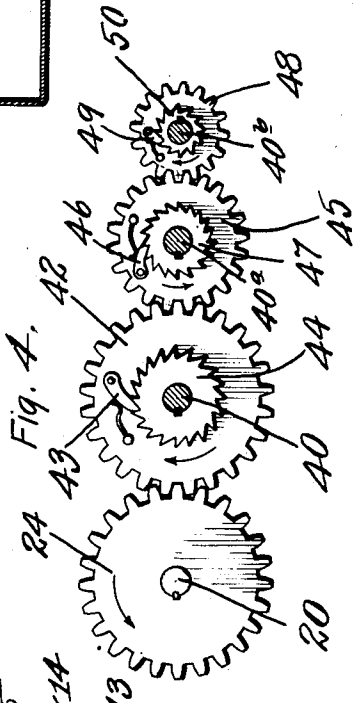

Fig. 4.

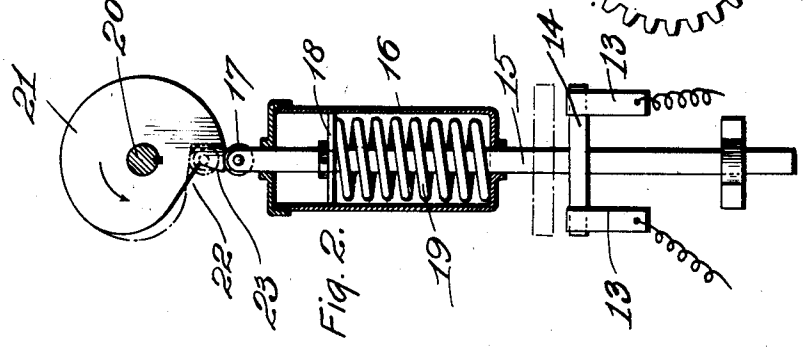

Fig. 2.

Witnesses

Wm. Janne.

W. L. Smith

Inventors

Thomas McA. Knox.

Fredrick W. Brockhoff

By F. C. Cornwall. Att'y.

UNITED STATES PATENT OFFICE.

THOMAS McA. KNOX, OF THE UNITED STATES ARMY, AND FREDRICK W. BROCKHOFF, OF JEFFERSON BARRACKS, MISSOURI.

COIN-CONTROLLED SWITCH FOR ELECTRIC CIRCUITS.

1,087,300. Specification of Letters Patent. Patented Feb. 17, 1914.

Application filed August 31, 1912. Serial No. 718,130.

To all whom it may concern:

Be it known that we, THOMAS McA. KNOX, an officer of the U. S. Army, stationed at Jefferson Barracks, Missouri, and FREDRICK W. BROCKHOFF, a citizen of the United States, residing at Jefferson Barracks, Missouri, have invented a certain new and useful Improvement in Coin-Controlled Switches for Electric Circuits, of which the following is a full, clear, and exact description, such as will enable others skilled in the art to which it appertains to make and use the same, reference being had to the accompanying drawings, forming part of this specification, in which—

Figure 1 is a diagrammatic view of our improved apparatus, the same being shown in connection with an electric fan circuit. Fig. 2 is an elevational view partly in section of the switch and the cam for operating the switch arm. Fig. 3 is an enlarged cross-sectional view taken approximately on the line 3—3 of Fig. 1, and showing the gear connections between the shaft that carries the cam that controls the switch arm and the train of reducing gearing. Fig. 4 is an enlarged detail section taken approximately on the line 4—4, and showing the train of gearing between the coin receptacles and the shaft carrying the switch-controlling cam. Fig. 5 is an enlarged vertical section through one of the coin-receiving boxes, said view being taken approximately on the line 5—5 of Fig. 1.

This invention relates to certain new and useful improvements in coin-controlled switches for electric circuits, the principal object of our invention being to provide a simple coin-controlled mechanism adapted for closing a switch in an electric circuit whereby current from a suitable source of supply will be delivered through the circuit to actuate a device such as a fan, the period of time of the delivery of the current into the circuit being controlled by the denomination of the coins inserted into the respective coin receptacles.

A further object of our invention is to arrange a switch in an electric circuit and to arrange a cam for operating said switch, which cam is set by the insertion of a coin in one of the coin receptacles, and which cam after being set is slowly rotated by means of a small motor to bring a shoulder or recess on said cam into position in alinement with the switch arm, thereby permitting said switch arm to move by spring pressure so as to open the circuit, thereby cutting off the flow of electrical energy to the fan or other device with which the apparatus is combined.

Our improved apparatus is particularly intended for use in connection with electric fans and other electrically operated devices ordinarily placed in hotel rooms and in staterooms of vessels.

To the above purposes our invention consists in certain novel features of construction and arrangement of parts hereinafter more fully described and claimed.

Referring by numerals to the accompanying drawings, 10 and 11 designate the lines of a circuit leading from a suitable source of electrical energy to a fan 12 or other electrically operated device, and located in line 10 is a pair of contact points 13 with which is adapted to engage a contact bar 14, preferably of the knife-blade type. This contact bar is carried by an arm 15, the upper portion of which is arranged to slide through a suitable spring housing 16, and carried by the upper end of said arm is a roller 17. Fixed on the arm 15 within the housing 16 is a collar 18, and arranged on the arm between this collar and the lower end of the housing is a compression spring 19.

Mounted for rotation in suitable bearings adjacent to the spring housing 16 is a shaft 20, and fixed thereon is a cam disk 21 provided with a recess 22, and there being an abrupt shoulder 23 at one end of said recess. The roller 17 on the switch arm 15 rides on the periphery of the cam disk 21. Fixed on the end of the shaft 20 opposite from the cam 21 is a pinion 24, and loosely mounted on the central portion of said shaft 20 is a pinion 25. Carried by this pinion 25 is a spring-pressed pawl 26, the point of which is adapted to engage the teeth of a ratchet wheel 27, the same being fixed on the shaft 20. Fixed on the shaft 28 that is mounted for rotation in suitable bearings is a pinion 29 that meshes with the pinion 25.

Located adjacent to the parts just de-

scribed is a small electric motor X, the armature shaft of which is in alinement with the shaft 28, and arranged between these shafts is a train of speed-reducing gearing comprising a number of comparatively large pinions 31 that mesh with comparatively small pinions 32.

Located adjacent to the parts just described is a series of coin receptacles adapted to receive the coin utilized for actuating the switch-closing mechanism of our improved device, and in the present instance we have shown three of these receptacles, although it will be readily understood that the number of receptacles can be varied as desired. These receptacles are identical in construction, each comprising a housing 30 in the center of which is located a vertically disposed tube 51 open at its upper end and closed at its lower end, and leading into the upper portion of this tube is a coin chute 52.

Formed through the wall of the tube 51 opposite the discharge opening of the coin chute is a coin discharge opening 33.

Arranged for vertical movement in the upper portion of the tube 51 is a plate 34 in which is seated an operating pin 35 which extends through a vertically disposed slot 36 formed in the side wall of the housing 30. Arranged for vertical movement in the lower portion of the tube 51 is a plate 37 provided on one of its edges with a series of teeth 38 which mesh with a pinion 39. This pinion is fixed on a shaft 40 that extends through one of the side walls of the housing 30, and is arranged for rotation in suitable bearings. Positioned beneath the plate 37 is a compression spring 41 which normally holds the plate 37 elevated, with its upper end immediately below the discharge end of the coin chute 52. Loosely mounted on the shaft 40 is a pinion 42 which is equal in diameter to and meshes with the pinion 24. Carried by this pinion 42 is a spring-held pawl 43, the point of which is adapted to engage with the teeth of a ratchet wheel 44, the same being fixed on the shaft 40.

The second coin receptacle 30^a is a counter-part of the receptacle 30, just described, but said second receptacle is adapted to receive coins of a higher denomination than the first mentioned receptacle, and loosely mounted on the shaft 40^a which projects from the second receptacle 30^a is a pinion 45 which meshes with and is proportionately smaller in diameter than the pinion 42. Arranged on this pinion 45 is a spring-pressed pawl 46, the point of which is adapted to engage the teeth of a ratchet wheel 47, the same being rigidly fixed on the shaft 40^a. The third coin receptacle 30^b is adapted to receive coins of a still higher denomination, and loosely mounted on the shaft 40^b that projects from the operating mechanism within said third receptacle is a pinion 48 which meshes with and is proportionately smaller than the pinion 45. This comparatively small pinion 48 carries a spring-pressed pawl 49, the point of which is adapted to engage the teeth of a ratchet wheel 50 that is fixed on the shaft 40^b.

The operation of our improved apparatus is as follows: Under normal conditions or when the switch member 14 is out of engagement with the contacts 13, the spring 19 holds the arm 15 elevated with the roller 17 in position within the notch 22 immediately adjacent to the shoulder 23. When it is desired to actuate the apparatus to close the switch and receive a certain amount of current for the purpose of operating the fan or other electrically operated device the pin 35 is engaged and moved forward, thereby elevating the plate 34. A coin of the proper denomination is now inserted in the coin chute 52, and said coin passes downward through said chute and discharges into the tube 51 between the plates 34 and 37. Thus the coin forms a connection between these plates and the operator now presses downward upon the pin 35, and as a result, the plate 37 is forced downward a certain distance, during which time the spring 41 is pressed and the pinion 39 is partially rotated by reason of its engagement with the teeth 38. As the pinion 39 is rotated rotary motion is imparted to the shaft 40 which carries said pinion, and by means of the pawl 43 and ratchet 44, the comparatively large pinion 42 is caused to rotate with said shaft 40, and by means of the pinion 24 the rotary motion of said pinion 42 is imparted to the companion pinion 24. Arrows in Fig. 4 indicate the direction of movement of the pinions 42 and 24. The rotary motion of the pinion 42 is not transmitted to the shaft 40^a for the reason that the pinion 45 on said shaft 40^a runs idle by reason of the position of the pawl 46 with respect to the ratchet wheel 47. As the shaft 20 is rotated, the cam disk 21 on the opposite end of said shaft will move with said shaft, and as a result, the roller 17 will ride out of the recess 22 and ride around on the periphery of said cam disk a point a predetermined distance away from the shoulder 23. As the roller 17 rides out of the notch 22 the switch arm 15 will be moved downward against the resistance offered by the spring 19, and the switch member 14 will be moved into engagement with the contact point 13, thereby closing the circuit so that electrical energy will pass through the contacts 10 and 11 to the fan 12 or other electrically operated device.

As the shaft 20 is rotated to carry the cam disk 21 into set position, the pinion 25 will

not be actuated owing to the position of the pawl 26, the point of which, during the rotation of said shaft 20, rides freely over the teeth of the ratchet wheel 27. As the circuit is closed to the fan or other device, the motor 30 will receive a current of electricity through branch lines *a*—*b*, and as said motor operates, the train of reducing gearing comprising the pinions 31 and 32 will be operated, and as a result, the shaft 28 carrying pinion 29 will be operated at a comparatively slow rate of speed. As the pinion 29 is rotated, corresponding rotary motion is imparted to pinion 25, and the pawl 26 carried thereby engaging with the ratchet wheel 27 will correspondingly rotate said ratchet wheel and the shaft 20, the speed of rotation being very slow. As the shaft 20 is thus slowly rotated the cam disk 21 will be likewise moved and the roller 17 on the end of the switch arm 15 will ride upon the periphery of said cam disk until the shoulder 23 is brought to a position to permit said roller to pass into the notch 22. During this travel of the roller 17 on the cam disk the switch member 14 is maintained in engagement with the contact points 13, and thus the fan or other device receives current and is operated. As the roller 17 rides off the shoulder 23 under the influence of spring 19, the member 14 is drawn out of engagement with the contact points 13, thereby opening the circuit.

After the plate 34 has been moved downward, as hereinbefore described, to move the plate 37 downward and impart movement to pinion 39 the coin positioned between the plates 34 and 37 discharges through the opening 33 and passes to the lower end of the receptacle 30. The spring 41 now acts to elevate the plate 37, during which movement the pinion 39 and shaft 40 will be reversely rotated, but such reverse rotary movement will not affect the pinion 42 owing to the position of the pawl 43 with respect to the teeth of the ratchet wheel 44.

When a coin of small denomination is used to set the cam disk and close the switch the cam disk is rotated so that the shoulder 23 is located a comparatively short distance away from the roller 17 which is in engagement on the periphery of said cam disk. When a coin of higher denomination is placed in the receptacle 30^a, and the various parts are operated, as hereinbefore described, the cam disk will be set so that the shoulder 23 is a greater distance away from the roller 17 than the distance between said shoulder and the roller when set by the use of the coin of smaller denomination. This difference of movement is due to the fact that the pinion 45 carried by the shaft 40^a projecting from the coin receptacle 30^a is comparatively smaller than the pinion 42 carried by the shaft 40. Likewise, when a coin of larger denomination is positioned in the receptacle 30^b to set the cam disk and close the switch, the cam disk is rotated a comparatively short distance, thus locating the shoulder 23 a considerable distance from the roller 17, and thus said roller travels for a comparatively long period of time on the edge of the cam disk, thereby maintaining the switch member 14 in engagement with the contact points 13 for a comparatively long period of time. Necessarily the pinion 48 carried by the shaft 40^b is proportionately smaller than the pinions 42 and 45.

The pinions 42, 45 and 48 control the distance of rotary movement of the cam disk when the same is set, and consequently the period of time that the roller 17 travels on the periphery of the cam disk before dropping into the notch 22 to open the circuit varies with the denomination of the coins inserted in the various receptacles 30, 30^a and 30^b.

An apparatus of our improved construction is comparatively simple, is particularly adapted for use in connection with all forms of electrically operated devices, and provides simple means whereby a predetermined amount of current can be obtained by depositing a coin of the proper denomination in one of the coin receptacles.

It will be readily understood that minor changes in the size, form and construction of the various parts of our improved coin-controlled switch can be made and substituted for those herein shown and described without departing from the spirit of our invention, the scope of which is set forth in the appended claims.

We claim:

1. In a coin controlled mechanism for operating an electric switch, a cam disk with which a part of the switch engages, a train of conjoined gearing for rotating the cam disk into a set position, certain members of which gearing are graduated in size, coin receptacles adapted to receive coins of different denominations, which receptacles are located adjacent to the differentially sized members of the train of gearing, pinions within the receptacles, which pinions are connected to the differentially sized members of the train of gearing, racks meshing with the pinions, and plungers for said racks, which plungers and racks are connected by the coins introduced into the receptacles.

2. In a coin controlled mechanism for operating an electric switch, a cam disk with which a part of the switch is adapted to engage, a coin receptacle located adjacent to the cam, a train of gearing including a pinion within the coin receptacle for rotat-

ing the cam in one direction, a spring pressed rack within the coin receptacle, which rack is in engagement with the pinion, a plunger arranged above the rack, and a coin chute leading through the coin receptacle for depositing coins between the lower end of the plunger and the upper end of the rack.

In testimony whereof we hereunto affix our signatures in the presence of two witnesses, this 24th day of August, 1912.

THOMAS McA. KNOX.
FREDRICK W. BROCKHOFF.

Witnesses:
M. P. SMITH,
JESSIE CLARK.