(12) INTERNATIONAL APPLICATION PUBLISHED UNDER THE PATENT COOPERATION TREATY (PCT)

(19) World Intellectual Property Organization
International Bureau

(43) International Publication Date
12 December 2013 (12.12.2013)

WIPO | PCT

(10) International Publication Number
WO 2013/184522 A1

(51) International Patent Classification:
F28F 9/02 (2006.01)

(21) International Application Number:
PCT/US2013/043742

(22) International Filing Date:
31 May 2013 (31.05.2013)

(25) Filing Language: English

(26) Publication Language: English

(30) Priority Data:
61/657,354 8 June 2012 (08.06.2012) US

(71) Applicant: **MODINE MANUFACTURING COMPANY** [US/US]; 1500 DeKoven Avenue, Racine, WI 53403-2552 (US).

(72) Inventor: **JOHNSON, Mark, W.**; 1629 Warwick Way, Racine, WI 53406 (US).

(74) Agent: **CHESLOCK, Alan, C.**; Michael Best & Friedrich LLP, 100 East Wisconsin Avenue, Suite 3300, Milwaukee, WI 53202-4108 (US).

(81) Designated States *(unless otherwise indicated, for every kind of national protection available)*: AE, AG, AL, AM, AO, AT, AU, AZ, BA, BB, BG, BH, BN, BR, BW, BY, BZ, CA, CH, CL, CN, CO, CR, CU, CZ, DE, DK, DM, DO, DZ, EC, EE, EG, ES, FI, GB, GD, GE, GH, GM, GT, HN, HR, HU, ID, IL, IN, IS, JP, KE, KG, KN, KP, KR, KZ, LA, LC, LK, LR, LS, LT, LU, LY, MA, MD, ME, MG, MK, MN, MW, MX, MY, MZ, NA, NG, NI, NO, NZ, OM, PA, PE, PG, PH, PL, PT, QA, RO, RS, RU, RW, SC, SD, SE, SG, SK, SL, SM, ST, SV, SY, TH, TJ, TM, TN, TR, TT, TZ, UA, UG, US, UZ, VC, VN, ZA, ZM, ZW.

(84) Designated States *(unless otherwise indicated, for every kind of regional protection available)*: ARIPO (BW, GH, GM, KE, LR, LS, MW, MZ, NA, RW, SD, SL, SZ, TZ, UG, ZM, ZW), Eurasian (AM, AZ, BY, KG, KZ, RU, TJ, TM), European (AL, AT, BE, BG, CH, CY, CZ, DE, DK, EE, ES, FI, FR, GB, GR, HR, HU, IE, IS, IT, LT, LU, LV, MC, MK, MT, NL, NO, PL, PT, RO, RS, SE, SI, SK, SM, TR), OAPI (BF, BJ, CF, CG, CI, CM, GA, GN, GQ, GW, KM, ML, MR, NE, SN, TD, TG).

Published:

— *with international search report (Art. 21(3))*

— *before the expiration of the time limit for amending the claims and to be republished in the event of receipt of amendments (Rule 48.2(h))*

(54) Title: HEAT EXCHANGER, AND METHOD OF DISTRIBUTING REFRIGERANT THEREIN

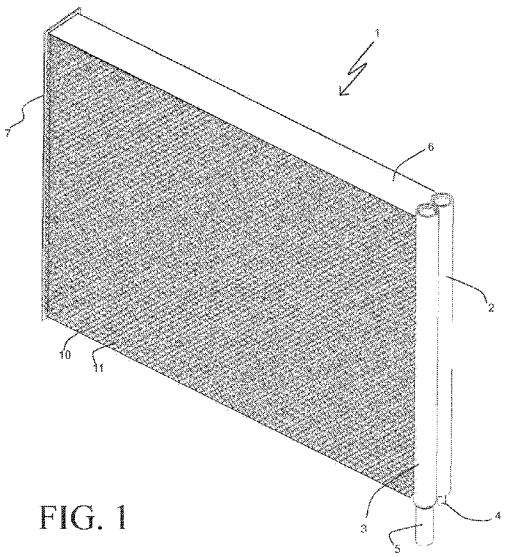

FIG. 1

(57) Abstract: A heat exchanger has a header extending in a longitudinal direction, slots arranged along the longitudinal direction, and tube ends received in the slots. An inlet is arranged to allow fluid to flow into the heat exchanger. A distributor tube is at least partly within the header, is connected to the inlet, and extends from an end of the header to a terminating location. A first subset of the slots is located between the end of the header and the terminating location, and a second subset of the slots is located between the opposite end of the header and the terminating location. Flow can be directed from the distributor tube into the header through an orifice at the terminating location, and/or through orifices along the length of the distributor tube.

WO 2013/184522 A1

HEAT EXCHANGER, AND METHOD OF DISTRIBUTING REFRIGERANT THEREIN

CROSS-REFERENCE TO RELATED APPLICATIONS

[0001] This application claims priority to U.S. Provisional Patent Application No. 61/657,354, filed June 8, 2012, the entire contents of which are hereby incorporated by reference herein.

FIELD OF THE INVENTION

[0002] The present application relates to heat exchangers.

BACKGROUND

[0003] Vapor compression systems are commonly used for refrigeration and/or air conditioning and/or heating, among other uses. In a typical vapor compression system, a refrigerant, sometimes referred to as a working fluid, is circulated through a continuous thermodynamic cycle in order to transfer heat energy to or from a temperature and/or humidity controlled environment and from or to an uncontrolled ambient environment. While such vapor compression systems can vary in their implementation, they most often include at least one heat exchanger operating as an evaporator, and at least one other heat exchanger operating as a condenser.

[0004] In systems of the aforementioned kind, a refrigerant typically enters an evaporator at a thermodynamic state (i.e., a pressure and enthalpy condition) in which it is a subcooled liquid or a partially vaporized two-phase fluid of relatively low vapor quality. Thermal energy is directed into the refrigerant as it travels through the evaporator, so that the refrigerant exits the evaporator as either a partially vaporized two-phase fluid of relatively high vapor quality or a superheated vapor.

[0005] At another point in the system the refrigerant enters a condenser as a superheated vapor, typically at a higher pressure than the operating pressure of the evaporator. Thermal energy is rejected from the refrigerant as it travels through the condenser, so that the refrigerant exits the condenser in an at least partially condensed

condition. Most often the refrigerant exits the condenser as a fully condensed, sub-cooled liquid.

[0006] Some vapor compression systems are reversing heat pump systems, capable of operating in either an air conditioning mode (such as when the temperature of the uncontrolled ambient environment is greater than the desired temperature of the controlled environment) or a heat pump mode (such as when the temperature of the uncontrolled ambient environment is less than the desired temperature of the controlled environment). Such a system may require heat exchangers that are capable of operating as an evaporator in one mode and as a condenser in an other mode.

[0007] One especially useful type of heat exchanger used in some refrigeration systems, for both evaporators and condensers, is the parallel flow (PF) style of heat exchanger. Such a heat exchanger can be characterized by having multiple, parallel arranged channels, especially micro-channels, for conducting the refrigerant through the heat transfer region from an inlet manifold to an outlet manifold. In order for an evaporator of this type to provide an optimized heat transfer performance, it is known to include some structure into the inlet manifold in order to maximize the uniformity of the flow distribution to each of the parallel channels. The extent to which such a structure can maximize the uniformity can be negatively impacted, however, by the location of the refrigerant outlet port within the outlet manifold. Thus, there is still room for improvement.

SUMMARY

[0008] Some embodiments of the invention provide a method for distributing refrigerant in a heat exchanger. A flow of refrigerant is delivered to a fluid inlet and is directed through a distribution tube located within an inlet header, in a direction parallel to an axis of the header. A first portion of the flow is diverted from the distributor tube to the internal volume of the header in a direction transverse to the axis. A second portion is directed from an end of the distributor tube to the internal volume of the header in a direction parallel to the axis. The refrigerant is directed from the internal volume of the header to tube ends received within the inlet header.

[0009] In some embodiments, the second portion of the flow is directed through a flow constriction. In some embodiments, a third portion of the flow is diverted from the distributor tube to the internal volume of the header in a direction transverse to the axis. In some embodiments the first and third portions are diverted through first and second flow orifices. In some such embodiments the first and second flow orifices are located in a common plane normal to the axis, while in other such embodiments the first orifice is located upstream of the second orifice with respect to the refrigerant flow.

[0010] In some embodiments, a subset of the tube ends is located between the inlet and the end of the distributor tube. In some such embodiments that subset of tube ends is no more than half of the tube ends.

[0011] In some embodiments, the refrigerant is collected in an outlet header of the heat exchanger, and is removed through a fluid outlet adjacent to the fluid inlet.

[0012] Some other embodiments of the invention provide a heat exchanger having a header extending in a longitudinal direction, slots arranged along the longitudinal direction, and tube ends received in the slots. An inlet is arranged to allow fluid to flow into the heat exchanger. A distributor tube is at least partly within the header, is connected to the inlet, and extends from an end of the header to a terminating location. A first subset of the slots is located between the end of the header and the terminating location, and a second subset of the slots is located between the opposite end of the header and the terminating location.

[0013] In some embodiments the distributor tube is circular, and in some embodiments it includes an outlet orifice for fluid flow at the terminating location. In some embodiments the distributor tube includes at least one outlet orifice for fluid flow between the inlet and the terminating location. In some embodiments the outlet orifice at the terminating location is greater in diameter than the outlet orifice(s) between the inlet and the terminating location, and in some specific embodiments it is between three and four times greater.

BRIEF DESCRIPTION OF THE DRAWINGS

[0014] FIG. 1 is a perspective view of a heat exchanger according to an embodiment of the invention.

[0015] FIG. 2 is a partial plan view of the heat exchanger of FIG. 1.

[0016] FIG. 3 is a partial section plan view along the lines III-III in FIG. 2.

[0017] FIG. 4 is a perspective view of selected parts of the heat exchanger of FIG. 1.

[0018] FIG. 5 is a partial perspective view of a fin and tube combination for use in the heat exchanger of FIG. 1.

[0019] FIGs. 6A-C are diagrams of thermal imaging data obtained by testing various heat exchangers according to embodiments of the invention.

DETAILED DESCRIPTION

[0020] Before any embodiments of the invention are explained in detail, it is to be understood that the invention is not limited in its application to the details of construction and the arrangement of components set forth in the following description or illustrated in the following drawings. The invention is capable of other embodiments and of being practiced or of being carried out in various ways. Also, it is to be understood that the phraseology and terminology used herein is for the purpose of description and should not be regarded as limiting. The use of "including," "comprising," or "having" and variations thereof herein is meant to encompass the items listed thereafter and equivalents thereof as well as additional items. Unless specified or limited otherwise, the terms "mounted," "connected," "supported," and "coupled" and variations thereof are used broadly and encompass both direct and indirect mountings, connections, supports, and couplings. Further, "connected" and "coupled" are not restricted to physical or mechanical connections or couplings.

[0021] FIGs. 1-5 illustrate an exemplary embodiment of a heat exchanger 1 according to the present invention. In some applications such a heat exchanger 1 may be used as an evaporator in a vapor compression based climate control system. In other applications such a heat exchanger 1 may be used as a condenser in a vapor compression based

climate control system. In still other applications such a heat exchanger 1 may operate both as a condenser in a first mode of operation, and as an evaporator in a second mode of operation. In still other applications the heat exchanger 1 may find utility in other types of systems such as, for example, a Rankine cycle power generation system.

[0022] The heat exchanger 1 includes a first flow pass comprising a plurality of parallel arranged tubes 10a, and a second flow pass comprising a plurality of parallel arranged tubes 10b. The tubes 10a of the first flow pass extend from a first tubular header 2 at a first end of the heat exchanger 1 to an intermediate header structure 7 at a second end opposite the first end. The tubes 10b extend from the intermediate header structure 7 to a second tubular header 3 at the first end of the heat exchanger 1. A first fluid port 4 at the first tubular header 2 and a second fluid port 5 at the second tubular header 3 provide means for connecting the heat exchanger 1 into a vapor compression or similar system by, for example, connecting the fluid ports 4,5 to refrigerant plumbing 18 (FIG. 3).

[0023] By being so arranged, the first and second flow passes are sequential to one another so that a fluid (for example, a refrigerant) may be directed to flow into the heat exchanger 1 by way of the fluid inlet port 4, flow through the tubes 10a of the first flow pass from the tubular inlet header 2 to the intermediate header structure 7, flow through the tubes 10b of the second flow pass from the intermediate header structure 7 to the tubular outlet header 3, and flow out of the heat exchanger 1 by way of the fluid outlet port 5. It should be understood, however, that the fluid might similarly enter the heat exchanger 1 by way of the port 5 and exit the heat exchanger 1 by way of the port 4, so that the flow through the heat exchanger 1 is reversed and the fluid encounters the flow passes in an order that is the reverse of the above.

[0024] Fins 11 are arranged between adjacent ones of the tubes 10. Although the exemplary fins 11 are of a serpentine convoluted type, any type of fins regularly used and known in the art can be similarly employed. The fins 11 can be used to provide surface area enhancement and/or flow turbulation in order to improve the rate of heat transfer between the fluid passing through the tubes 10 and another fluid, such as for example air,

passing over the outer surfaces of the tubes 10. The fins 11 can alternatively, or in addition, provide beneficial spacing and/or structural support to the tubes 10.

[0025] In some embodiments the fins 11 can be of sufficient depth to be common to both a tube 10a in the first flow pass and a tube 10b in the second flow pass. In other embodiments, the fins 11 can have a depth that is only sufficient for a single tube 10, so that separate fins 11 are used for the tubes 10a and the tubes 10b. The fins 11 are optional, however, and need not be present at all in a heat exchanger 1 embodying the present invention.

[0026] As best seen in FIG. 5, the tubes 10 of the exemplary embodiment include two opposing broad flat sides joined by two opposing narrow sides. Internal webs 15 can be provided inside the tubes 10 in order to divide the internal space of the tube 10 into a plurality of internal flow channels 14. The webs 15 can provide heat transfer augmentation as well as structural support for the tube 10. Such structural support can be especially beneficial in vapor compression systems, wherein the fluid passing through the tubes 10 may be at an operating pressure that is substantially elevated in comparison to the pressure external to the tubes 10. The internal flow channels 14 are open to receive or deliver fluid flow at tube ends 16 located at opposite ends of each tube 10.

[0027] The exemplary embodiment of FIG. 1 includes a flat intermediate header 7 arranged at an end opposing the tubular headers 2, 3. Fluid flow traveling through the first plurality of tubes 10a can be received within flow passages contained in the intermediate header 7, and can be transferred to the second plurality of tubes 10b, or vice versa. An exemplary embodiment of such an intermediate header 7 is described in currently pending US patent application no. 13/076,607 to Mross et al., filed on March 31, 2011, the entire contents of which are incorporated by reference herein. It should be understood, however, that the intermediate header 7 can alternatively be of other constructions, and in some embodiments the intermediate header 7 can be eliminated altogether.

[0028] The tubular headers 2, 3 are each provided with a plurality of slots 17 arranged along their longitudinal lengths, in one-to-one correspondence with the tubes

10. The tube ends 16 are sealingly received within the slots 17 in order to enable the flow of fluid between the internal volumes of the tubular headers 2, 3 and the internal flow channels 14 of the tubes 10. Slots can be similarly provided in the intermediate header 7 for the same purpose.

[0029] As best seen in FIGs. 3 and 4, the end of the tubular header 2 proximate the fluid port 4 is closed with a cap 8. A fluid distributor tube 9 is connected to the fluid port 4 and penetrates through the cap 8 in order to deliver a flow of fluid received at the inlet port 4 to the internal volume of the tubular header 2 and, subsequently, to the tubes 10. The distributor tube 9 can be formed integral with the fluid port 4, as in the exemplary embodiment, or it can be a separate component that is joined thereto.

[0030] The distributor tube 9 extends in a longitudinal direction parallel to the axis 19 of the tubular header 2, from the end of the tubular header 2 proximate the fluid port 4 to a terminating location partway along the length of the tubular header 2. In doing so, the distributor tube 9 extends past at least several of the slots 17. In the exemplary embodiment of FIG. 3 the distributor tube 9 extends past the first seven of the slots 17. The slots 17 arranged along the longitudinal length of the tubular header 2 thereby comprise a first subset of the slots 17 located between the end of the tubular header 2 proximate the fluid port 4 and the terminating location, and a second subset of the slots 17 located between the terminating location and the opposing end of the tubular header 2. In preferable embodiments the first subset of the slots 17 includes no more than half of the slots 17 in the tubular header 2.

[0031] The distributor tube 9 is provided with a plurality of orifices 12 arranged along the cylindrical wall of the distributor tube 9. In the exemplary embodiment four such orifices are shown, but more or fewer orifices 12 may be provided in other embodiments. Additionally, an orifice 13 is provided at the terminating location of the distributor tube 9.

[0032] During operation of the heat exchanger 1 as an evaporator, some portions of a refrigerant flow traveling through the distributor tube 9, in a direction parallel to the axis 19 of the tubular header 2, are diverted to exit the distributor tube 9 through the orifices

12, in a direction transverse to the axis 19. The balance of the refrigerant flow travels through the entire length of the distributor tube 9 and exits through the orifice 13.

[0033] The number of orifices 12, the locations of the orifices 12 along the distributor tube 9, and the relative sizes of the orifice 13 and the orifices 12 can be adjusted in order to optimize the uniformity of flow distribution among the tubes 10. In some, but not all, embodiments, multiple orifices 12 are located in a common plane normal to the axis 19. In some, but not all, embodiments, one or more first orifices 12 are located upstream of one or more second orifices 12. In some preferable embodiments the orifice 13 provides a flow constriction. In some embodiments the diameter of the orifice 13 is three to four times larger than the diameter of the orifices 12.

[0034] The use of a distributor tube 9 according to the present invention can be especially beneficial when the outlet port 5 is located at an end of the tubular header 3, as in the embodiment of FIG. 1. When the heat exchanger 1 operates as an evaporator in a vapor compression system, liquid or two-phase (liquid and vapor) refrigerant is vaporized and superheated as it travels through the tubes 10, by receiving heat from air passing over the outer surfaces of the tubes 10. The superheated vapor is discharged from the tubes 10 into the internal volume of the tubular header 3 and is removed from the heat exchanger by way of the fluid port 5. As a consequence of the low density of the superheated vapor (in comparison to the density of the liquid or two-phase refrigerant at the tubular header 2), the location of the fluid port 5 can have a substantial impact on the uniformity of refrigerant distribution among the tubes 10b.

[0035] An example of the impact that the location of the fluid port 5 can have on the uniformity of fluid distribution among the tubes 10b can be seen in FIGs. 6A and 6B. FIG. 6A shows the location of the superheat front in the second pass of an evaporator 20, as evidenced by infrared thermal imaging of the evaporator during performance testing. The evaporator 20 is similar in construction to the heat exchanger 1, except that the outlet fluid port 5 is located at the center (in the longitudinal direction) of the tubular header 2, and the distribution tube used in the inlet tubular header (not shown) is of a typical

construction, extending the full length of the inlet tubular header and having orifices along the cylindrical wall only.

[0036] With continuing reference to FIG. 6A, the refrigerant flows from the intermediate header 7 to the tubular header 3 through a plurality of tubes (not shown). As the refrigerant flows through the tubes, heat is transferred from air passing over the tubes to the refrigerant, vaporizing the refrigerant and, eventually, superheating the vapor once the entire amount of refrigerant in a given tube has been vaporized. As vaporization is an isothermal process, the thermal imaging can be used to plot out the region 18 wherein the refrigerant is in a superheated state. The latent heat capacity of the refrigerant in each tube is directly related to the mass flow of refrigerant in each tube, and consequently, the uniformity of refrigerant flow distribution between the tubes can be inferred from the shape of the superheat region 18. In the case of FIG. 6A, the refrigerant appears to be fairly uniformly distributed among the tubes, with the exception of the outermost tubes at each side of the evaporator 18.

[0037] Turning now to FIG. 6B, the thermal image of an evaporator 20' during thermal performance testing is shown. The evaporator 20' is identical to the evaporator 20, except that the outlet port 5 has been relocated to the end of the tubular header 3 adjacent to the refrigerant inlet (not shown). A large superheated region extends the full length of the flow pass in more than half of the tubes, indicating that a significant number of the tubes (more than half) are starved of refrigerant. A relatively small number of tubes have refrigerant flow that is sufficient to provide vaporizing heat transfer over a substantial length of the tubes in the second pass. This leads not only to under-conditioning of the air and decreased system stability, but also to a low total heat duty in the evaporator 20', as the rate of refrigerant flow through the evaporator 20' will be throttled in order to maintain a constant superheat temperature (i.e. the difference between the actual temperature of the superheated vapor refrigerant exiting the evaporator 20' and the saturation temperature of the refrigerant at the inlet to the evaporator 20').

[0038] In comparison, FIG. 6C shows the thermal image of an evaporator 20'' during thermal performance testing, where the evaporator 20'' is similar to the evaporator 20' except that it includes the distributor tube 9 as shown in the embodiments of FIGs. 3 and 4. While some maldistribution of the refrigerant is still evident, the flow of refrigerant is overall much better distributed than in evaporator 20'. While not wishing to be bound by theory, it is believed that a substantial portion of the refrigerant flowing through the distributor tube 9 is directed as a submerged jet from the orifice 13 down the length of the tubular header 2 in order to feed refrigerant to those tubes located at the left side (as viewed in FIG. 6C) of the evaporator 20''. It is further believed that the orifices 12 arranged along the cylindrical wall of the distributor tube 9 allow for some of the refrigerant to exit the distributor tube 9 through those orifices 12, thereby creating a turbulent region near the first few tubes. It is thought that this turbulence counteracts the influence of the end suction caused by the placement of the fluid port 5, effectively preventing the bypass of liquid refrigerant through those initial tubes that is believed to be responsible for the maldistribution observed in evaporator 20'.

[0039] The heat transfer capacities of the evaporators 20' and 20'' were evaluated through testing at various air flow rates. This testing showed that the evaporator 20'' had a heat transfer capacity that was 8-10% greater than the heat transfer capacity of the evaporator 20' over the range of air flow rates. In addition, the evaporator 20'' showed improved system stability (decreased set-point hunting by the thermal expansion valve) and more uniform conditioning of the entire air stream.

[0040] Various alternatives to the certain features and elements of the present invention are described with reference to specific embodiments of the present invention. With the exception of features, elements, and manners of operation that are mutually exclusive of or are inconsistent with each embodiment described above, it should be noted that the alternative features, elements, and manners of operation described with reference to one particular embodiment are applicable to the other embodiments.

[0041] The embodiments described above and illustrated in the figures are presented by way of example only and are not intended as a limitation upon the concepts and

principles of the present invention. As such, it will be appreciated by one having ordinary skill in the art that various changes in the elements and their configuration and arrangement are possible without departing from the spirit and scope of the present invention.

I claim:

1. A method of distributing refrigerant in a heat exchanger, comprising:

delivering a flow of refrigerant to a fluid inlet of the heat exchanger;

directing the flow through a distributor tube arranged at least partially within an inlet header of the heat exchanger, in a direction parallel to an axis of the inlet header;

diverting a first portion of the flow from the distributor tube to an inlet header internal volume in a direction transverse to said axis;

directing a second portion of the flow from an end of the distributor tube to the inlet header internal volume in a direction parallel to said axis; and

directing the refrigerant flow from the inlet header internal volume to a plurality of tube ends received within the inlet header.

2. The method of claim 1, wherein directing the second portion of the flow from the distributor tube to the inlet header internal volume includes directing the refrigerant through a flow constriction.

3. The method of claim 2, wherein directing the second portion of the flow from the distributor tube to the inlet header internal volume includes creating a submerged jet of refrigerant in the refrigerant header.

4. The method of claim 1, further comprising diverting a third portion of the flow from the distributor tube to the inlet header internal volume in a direction transverse to said axis.

5. The method of claim 4, wherein the first portion is diverted through a first orifice in the distributor tube, the third portion is diverted through a second orifice in the distributor tube, and the first and second orifices are located in a common plane normal to said axis.

6. The method of claim 4, wherein the first portion is diverted through a first orifice in the distributor tube, the third portion is diverted through a second orifice in the distributor tube, and the first orifice is located upstream of the second orifice with respect to the flow of refrigerant.

7. The method of claim 1, wherein a subset of the plurality of tube ends is located between the inlet and the end of the distributor tube.

8. The method of claim 7, wherein the subset of tube ends comprises no more than half of the plurality of tube ends received within the inlet header.

9. The method of claim 1, further comprising:

collecting the refrigerant flow in an outlet header of the heat exchanger; and

removing the refrigerant flow through a fluid outlet arranged adjacent to the fluid inlet.

10. A heat exchanger comprising:

a header extending in a longitudinal direction from a first end of the header to a second end of the header, the header including a plurality of slots arranged along the longitudinal direction;

a plurality of fluid conveying tubes, each fluid conveying tube having an end receivingly located within one of the plurality of slots;

an inlet to allow for fluid to flow into the heat exchanger; and

a distributor tube arranged at least partly within the header, the distributor tube connecting to the inlet and extending from the first end to a terminating location between the first end and the second end, wherein the plurality of slots includes a first subset of one or more slots located between the first end and the terminating location, and a second subset of one or more slots located between the second end and the terminating location.

11. The heat exchanger of claim 10, wherein the distributor tube is circular in cross-section.

12. The heat exchanger of claim 10, wherein the distributor tube includes an outlet orifice for fluid flow arranged at the terminating location.

13. The heat exchanger of claim 10, wherein the distributor tube includes at least one outlet orifice for fluid flow arranged between the first end and the terminating location.

14. The heat exchanger of claim 10, wherein the distributor tube includes a first outlet orifice for fluid flow arranged at the terminating location and at least one second outlet orifice arranged between the first end and the terminating location, wherein the diameter of the first outlet orifice is greater than the diameter of the second outlet orifice.

15. The heat exchanger of claim 14, wherein the ratio of the diameter of the first orifice to the diameter of the second orifice is between three and four.

16. The heat exchanger of claim 10, wherein the first subset of one or more slots comprises no more than half of said plurality of slots.

17. The heat exchanger of claim 10 wherein the header is a first header, the heat exchanger further comprising a second header extending in a longitudinal direction from a first end of the second header to a second end of the second header, the second header being in fluid communication with the plurality of fluid conveying tubes to receive flow therefrom, the longitudinal direction of the second header being parallel to the longitudinal direction of the first header.

18. The heat exchanger of claim 17, wherein the second header is located adjacent to the first header.

19. The heat exchanger of claim 17, further comprising an outlet located at one of the first and second ends of the second header to allow for the fluid to flow out of the heat exchanger.

20. The heat exchanger of claim 19, wherein the inlet is adjacent to the outlet.

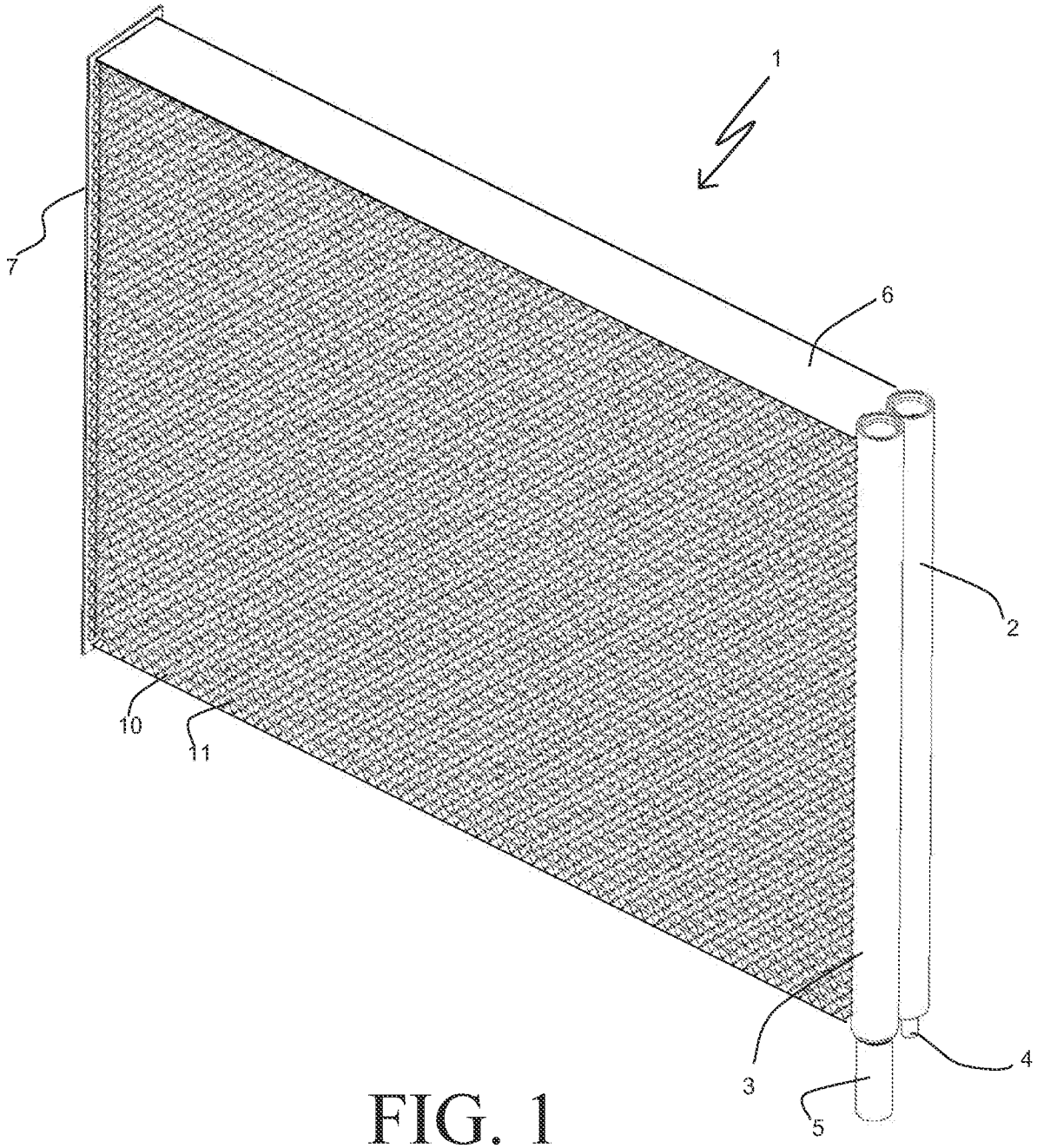

FIG. 1

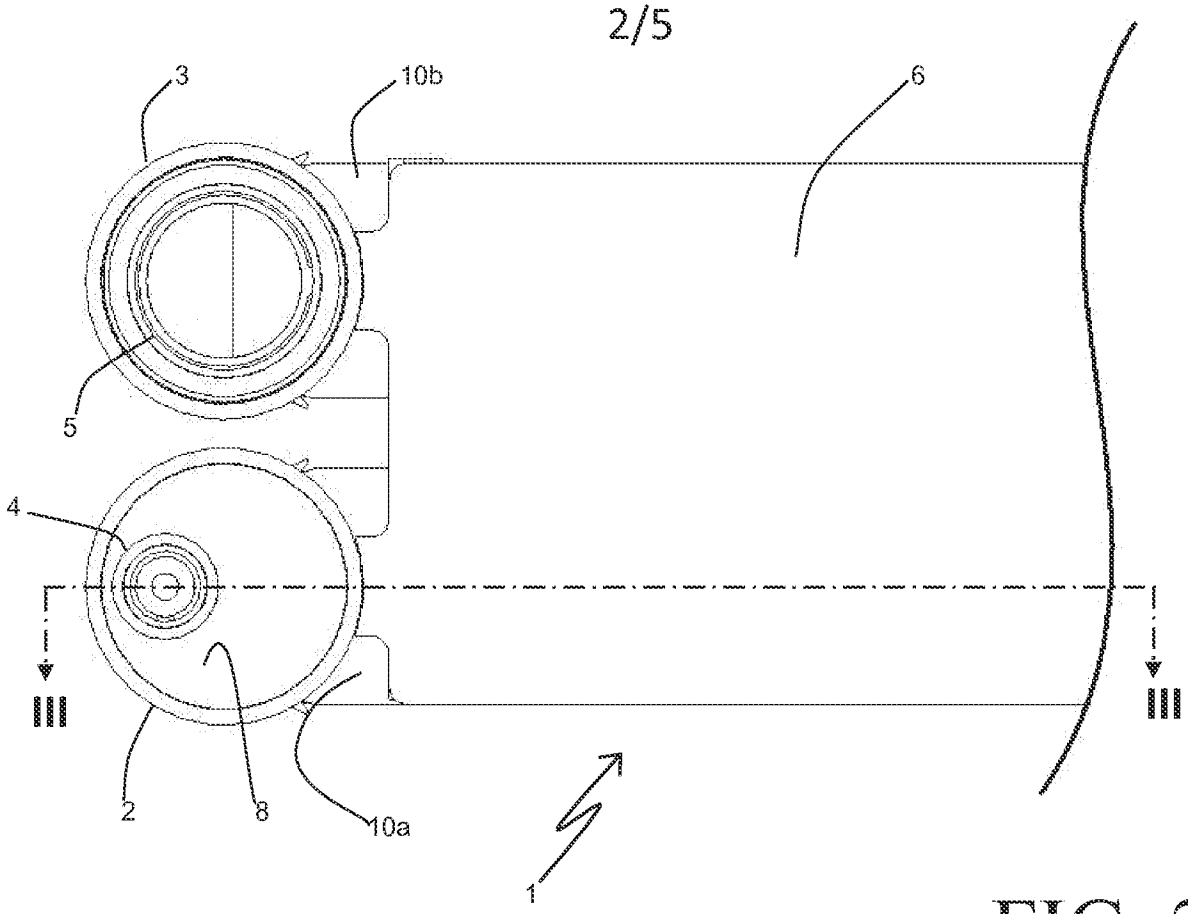

FIG. 2

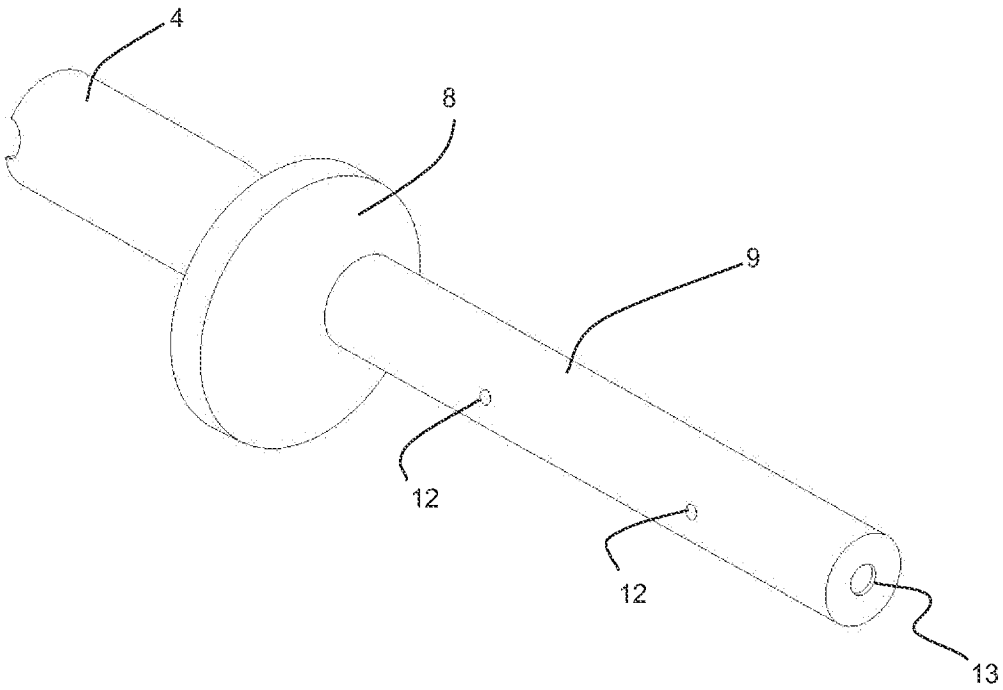

FIG. 4

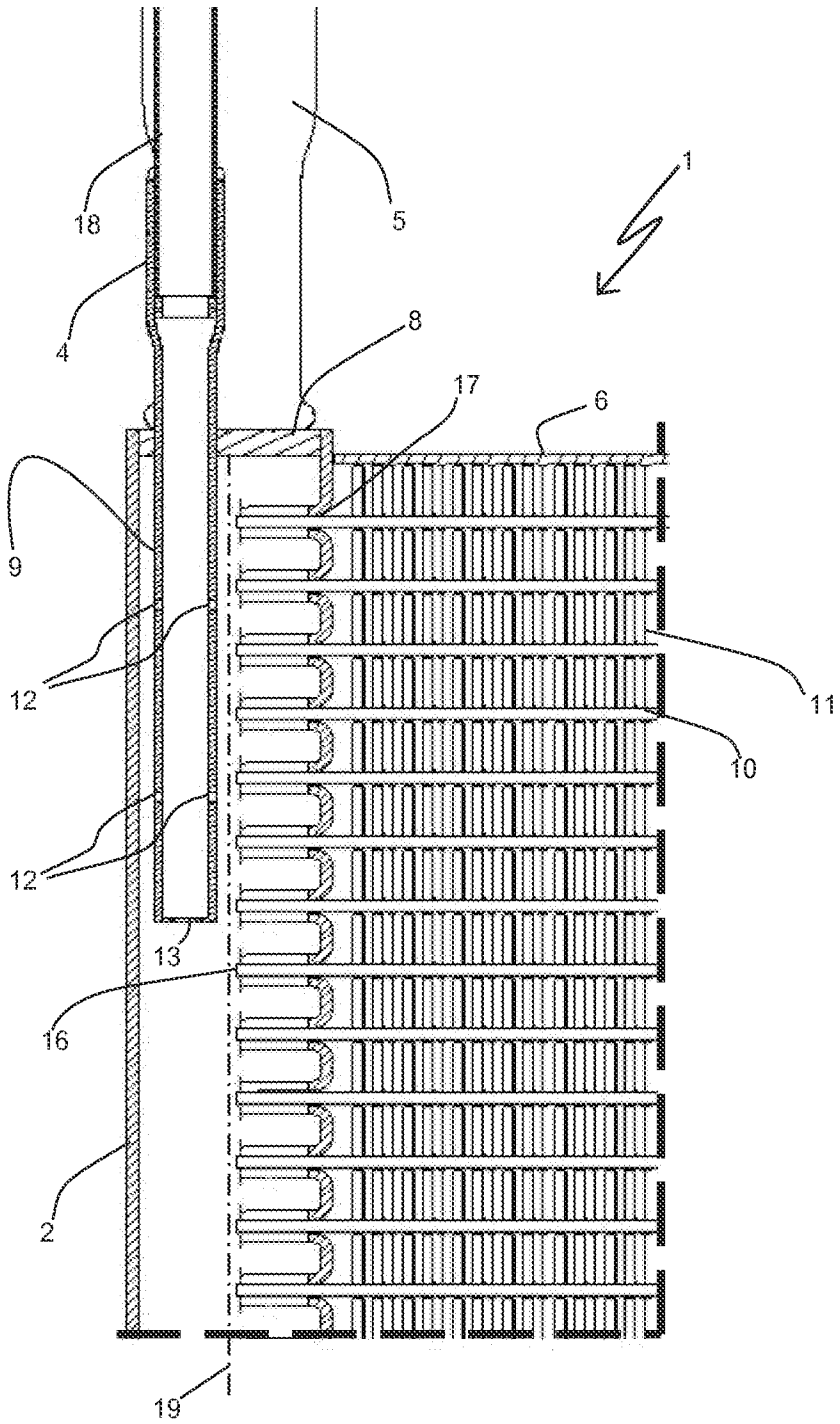

FIG. 3

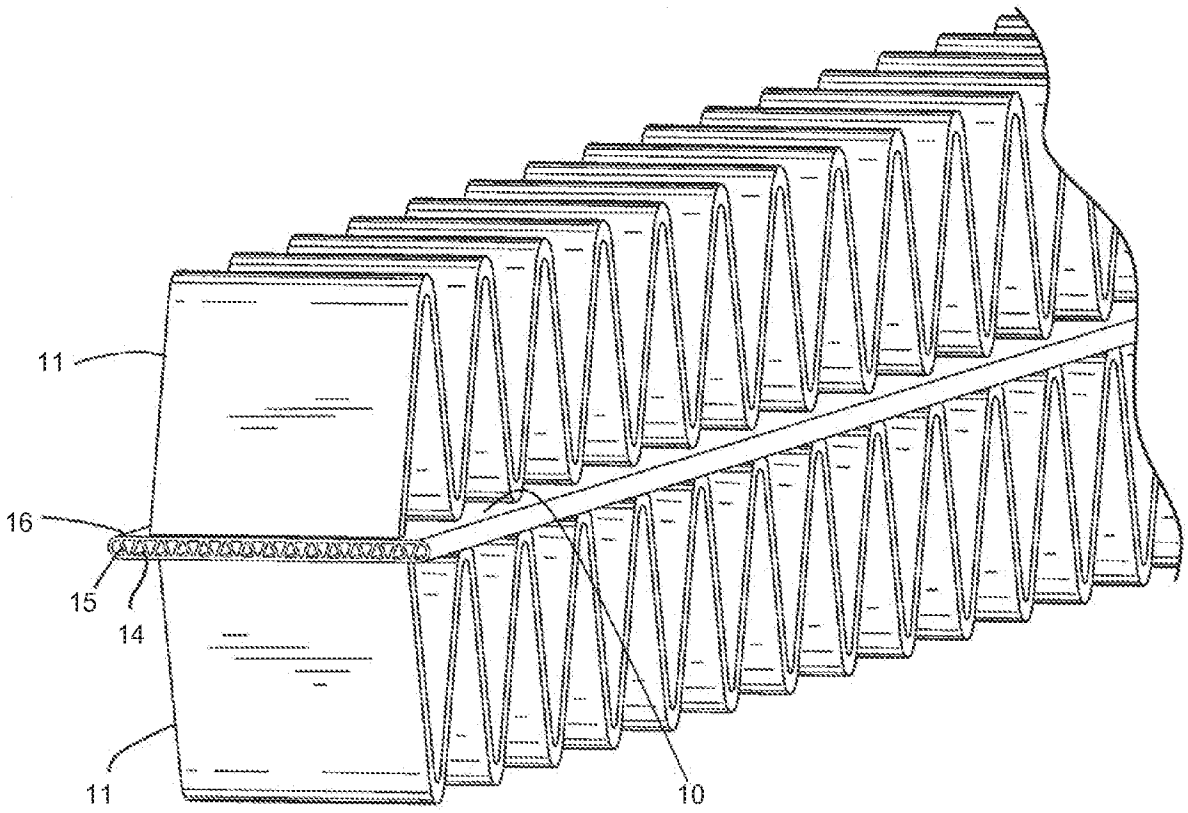

FIG. 5

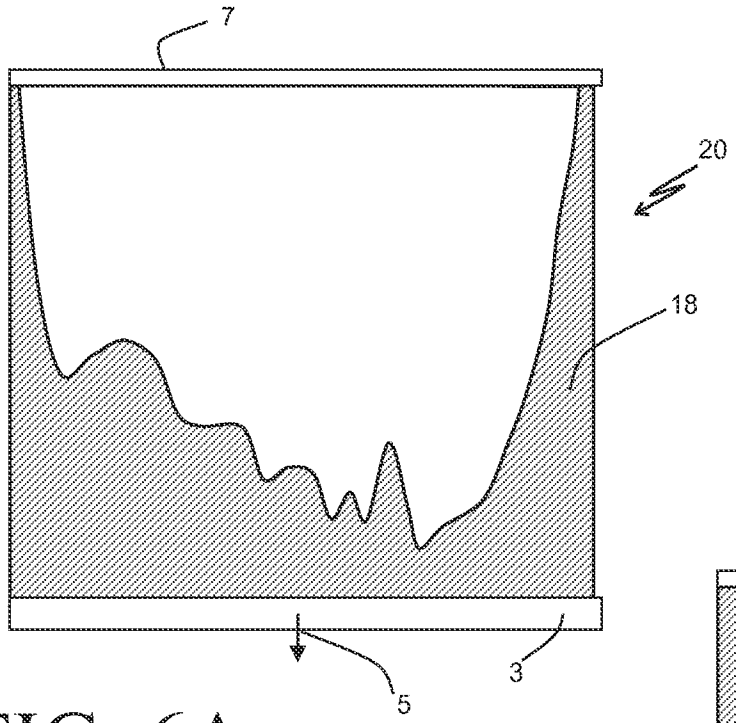

FIG. 6A

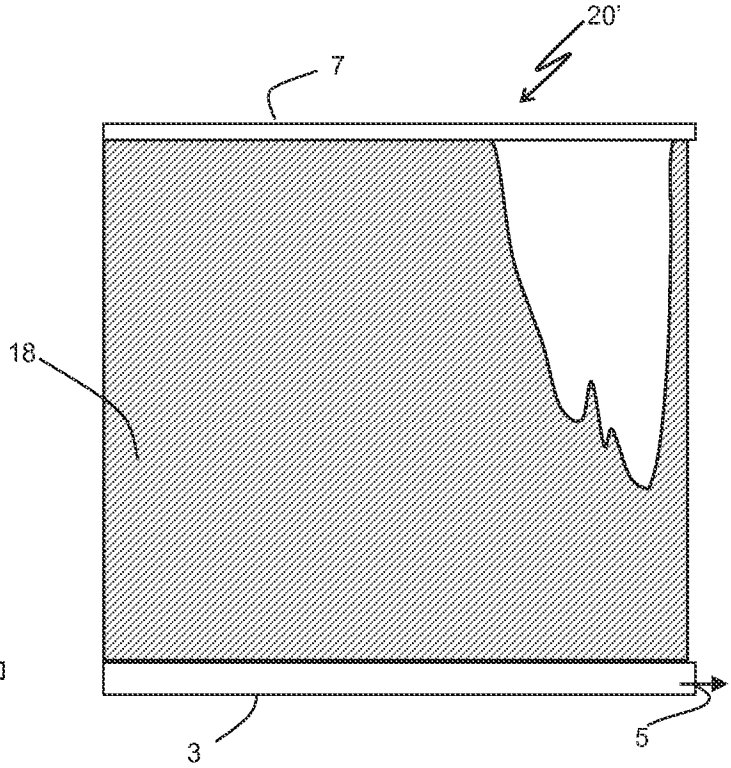

FIG. 6B

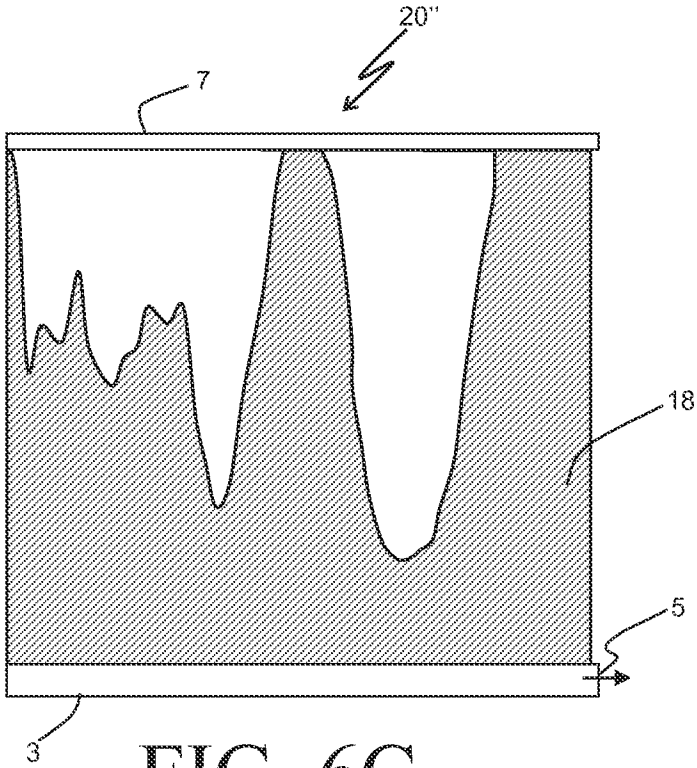

FIG. 6C

INTERNATIONAL SEARCH REPORT

International application No.
PCT/US2013/043742

A. CLASSIFICATION OF SUBJECT MATTER
IPC(8) - F28F 9/02 (2013.01)
USPC - 165/173
According to International Patent Classification (IPC) or to both national classification and IPC

B. FIELDS SEARCHED

Minimum documentation searched (classification system followed by classification symbols)
IPC(8) - F25B 39/00; F28D 1/00, 1/053; F28F 1/12, 1/32, 3/02, 3/08, 9/02, 9/22 (2013.01)
USPC - 165/166, 173, 174, 175

Documentation searched other than minimum documentation to the extent that such documents are included in the fields searched
CPC - F28D 1/05391; F28F 1/126, 9/0214, 9/026, 9/027, 9/0273, 9/22 (2013.01)

Electronic data base consulted during the international search (name of data base and, where practicable, search terms used)
PatBase, Google

C. DOCUMENTS CONSIDERED TO BE RELEVANT

Category*	Citation of document, with indication, where appropriate, of the relevant passages	Relevant to claim No.
X --- Y	US 2011/0139422 A1 (ODDI et al) 16 June 2011 (16.06.2011) entire document	10-13, 16 --- 2-3, 7-8, 14-15, 17-20
Y	US 2011/0290465 A1 (JOSHI et al) 01 December 2011 (01.12.2011) entire document	1-9, 14-15
Y	US 2011/0030934 A1 (MUNOZ et al) 10 February 2011 (10.02.2011) entire document	1-9
Y	US 2011/0240271 A1 (MROSS et al) 06 October 2011 (06.10.2011) entire document	9, 17-20
A	US 2011/0203308 A1 (CHIANG et al) 25 August 2011 (25.08.2011) entire document	1-20
A	US 5,465,783 A (O'CONNOR) 14 November 1995 (14.11.1995) entire document	1-20

☐ Further documents are listed in the continuation of Box C. ☐

* Special categories of cited documents:
"A" document defining the general state of the art which is not considered to be of particular relevance
"E" earlier application or patent but published on or after the international filing date
"L" document which may throw doubts on priority claim(s) or which is cited to establish the publication date of another citation or other special reason (as specified)
"O" document referring to an oral disclosure, use, exhibition or other means
"P" document published prior to the international filing date but later than the priority date claimed
"T" later document published after the international filing date or priority date and not in conflict with the application but cited to understand the principle or theory underlying the invention
"X" document of particular relevance; the claimed invention cannot be considered novel or cannot be considered to involve an inventive step when the document is taken alone
"Y" document of particular relevance; the claimed invention cannot be considered to involve an inventive step when the document is combined with one or more other such documents, such combination being obvious to a person skilled in the art
"&" document member of the same patent family

Date of the actual completion of the international search	Date of mailing of the international search report
15 October 2013	31 OCT 2013
Name and mailing address of the ISA/US Mail Stop PCT, Attn: ISA/US, Commissioner for Patents P.O. Box 1450, Alexandria, Virginia 22313-1450 Facsimile No. 571-273-3201	Authorized officer: Blaine R. Copenheaver PCT Helpdesk: 571-272-4300 PCT OSP: 571-272-7774