Dec. 15, 1942. W. H. GERISCH 2,305,414

ELECTRIC SWITCH

Filed Dec. 18, 1941

Fig.1.

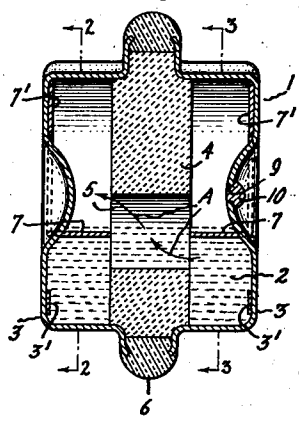

Fig.2.

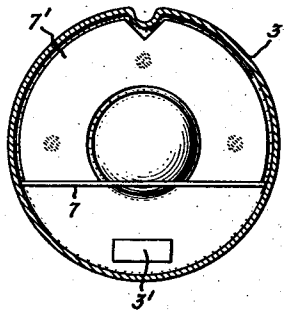

Fig.3.

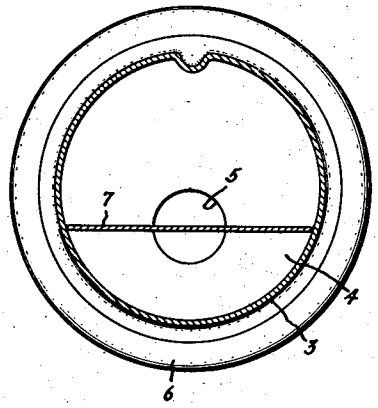

Fig.4.

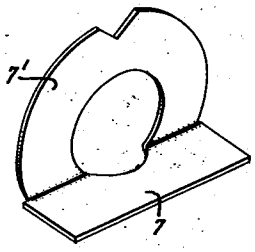

Fig.5.

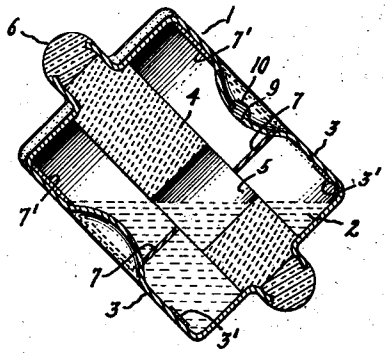

Fig.6.

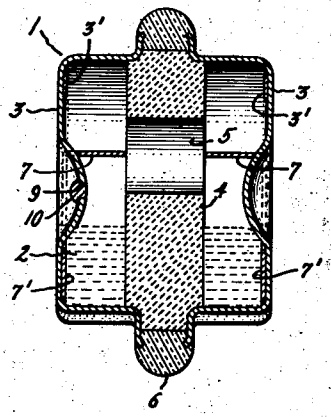

Inventor:
Walter H. Gerisch,
by Harry E. Dunham
His Attorney.

Patented Dec. 15, 1942 2,305,414

UNITED STATES PATENT OFFICE

2,305,414

ELECTRIC SWITCH

Walter H. Gerisch, North Bergen, N. J., assignor to General Electric Company, a corporation of New York

Application December 18, 1941, Serial No. 423,411

6 Claims. (Cl. 200—152)

The present invention relates to circuit closers or switches of the type having an envelope which contains a quantity of a liquid contact medium such as mercury arranged to complete and interrupt a circuit between the terminals of the circuit closer.

It is a primary object of the invention to provide improved switches of the type specified above and more particularly to provide a construction which is adapted to avoid circuit interruption while the switch is in closed position regardless of the operating conditions to which the switch may be subjected.

It is a further and more particular object to provide a liquid contact switch of the multipart enclosure type which cannot be open-circuited merely by being exposed to shocks and jars.

It is a still further object to provide a switch of the so-called "mercury button" construction which is especially adapted for use as a safety overturn switch or the like.

For an explanation of the invention attention is directed to the accompanying description and the appended drawing. In the drawing, Fig. 1 is a sectional view of a switch which embodies the invention; Fig. 2 is a sectional view taken on line 2—2 of Fig. 1; Fig. 3 is a further sectional view taken on line 3—3 of Fig. 1; Fig. 4 is a perspective of one of the elements of the switch of Fig. 1; and Figs. 5 and 6 illustrate two alternative open-circuit positions of the switch.

The circuit closer illustrated in the drawing has an envelope 1 containing a limited quantity of mercury 2. The major portion of the envelope comprises opposed straight-drawn cup-shaped metal terminals 3, 3 juxtaposed to form an enclosed space between them. Between the terminals is a diaphragm or barrier 4 of insulating (e. g., ceramic) material having an aperture 5 therein through which the mercury extends in order to complete a circuit between the terminals 3, 3. When the circuit closer is in the position illustrated, the conducting path between the terminals is complete.

The members 3, 3 are hermetically joined by means of a thin ring 6 of glass or other thermoplastic material sealed directly thereto in such a way as to be also in continuous contact with the outer periphery of the diaphragm 4. Platinum tabs, spot-welded to the terminals 3, 3 for maintaining low resistance conditions in the circuit closer, are shown at 3'.

The opening 5 is located in the barrier 4 just below the center thereof, and the level of the mercury in the closed position of the switch is at about the center of the opening. Metal baffles 7, 7 (for example, of steel) are arranged between the barrier 4 and the terminals 3, 3, each baffle extending across the face of the barrier about at the center of the opening 5. The baffles are formed with transversely extending ring-shaped parts 7' (Fig. 4) by which they can be welded to the respective cup-shaped members 3, 3. Each baffle fits into an appropriately located slot formed in one surface of the barrier 4, but the opposed edges of the baffles are materially spaced within the confines of the aperture 5.

As a result of the described arrangement, wave-motion of the mercury produced by shocks and jars to which the switch may be subjected is reduced to a level at which it can hardly cause an accidental opening of the switch circuit. This is a consequence not only of the wave-limiting action of the baffles themselves but also of the fact that any splashing which tends to occur within the confines of the aperture 5 is impeded and minimized by the solid surfaces bounding the aperture. The effect then, as far as sporadically generated waves are concerned, is substantially that of a continuous baffle extending over the entire surface of the mercury.

On the other hand, the baffles 7, 7 are found to interfere only to a negligible degree with the normal functioning of the switch when used in its intended manner. This is attributable mainly to the fact that the baffle elements, when positioned as specified, do not to any material degree impede the flow of mercury through and from the aperture 5. Thus, when the switch is tilted, for example, into the open-circuit position illustrated in Fig. 5, the mercury in the right-hand portion of the switch is able to flow freely into the space above the left-hand baffle, the course of flow being indicated by the arrows A in Fig. 1. As a result of this motion of the mercury, the circuit between the switch terminals is broken by the action of the barrier 4 in separating the mercury into two pools, the division occurring at the right-hand edge of the opening 5. The angle of tilt required to accomplish circuit-interruption by the switch is little different with the baffles 7 in place than with these elements omitted, being approximately 40° in both cases. This is a highly important feature for many uses of the switch.

The characteristics of the switch described above are such as to make it well adapted for use as a safety overturn device for electric appliances and for the ignition and lighting circuits of automotive vehicles and the like. In the lat-

ter application, in particular, the substantial insensitivity of the switch to sporadic shocks and jars is an important advantage since it eliminates the possibility of circuit-interruption except in the event of an actual overturn of the vehicle.

As a result of the placement of the barrier opening 5 below the center of the switch (i. e., in the closed-circuit position of the switch), circuit-interruption is assured regardless of whether the switch is tilted on its side or completely reversed as in the case of a 180° overturn of the vehicle or other apparatus with which the switch is associated. The latter circumstance is illustrated by Fig. 6, which shows the switch in the condition which it assumes when it is turned upside down from the position illustrated in Fig. 1. Obviously, the higher numbered figure indicates an interruption of any circuit with which the switch is associated. The switch may be brought into open-circuit position by sufficient rotation about any horizontal axis.

A charge of hydrogen ranging in pressure from about one atmosphere to much higher pressures may advantageously be employed in connection with a switch such as that illustrated. Such hydrogen may be introduced into the switch during the manufacturing process through an opening 9, provided in the metal member 3. This opening is thereafter sealed, preferably by fusion welding a closure member 10 therein, for example, in accordance with the procedure described and claimed in John H. Payne Patent 2,141,932, issued December 27, 1938. Alternatively, the switch may be evacuated or air filled, as desired, and may also having a filling of air and hydrogen mixture.

What I claim as new and desire to secure by Letters Patent of the United States is:

1. A switch including spaced terminals, an apertured circuit-interrupting barrier positioned between the terminals, a quantity of liquid contact medium electrically connecting said terminals through the aperture in said barrier when the switch is in closed-circuit position, and a baffle structure for limiting the motion of the medium produced by shocks and jars to which the switch may be subjected, said baffle structure lying in a plane which intersects the aperture in the said barrier and having a gap at the region of the said aperture, whereby flow of the contact medium through the aperture is not materially impeded when the switch is moved from closed-circuit position to open-circuit position.

2. An enclosed electric switch having mutually spaced terminals, a quantity of liquid contact medium within the switch, a circuit-interrupting barrier within the switch and having an aperture which is at least partially immersed in the contact medium in the closed position of the switch, and wave-limiting baffles extending across the respective faces of the said barrier at about the center of the said aperture.

3. A switch including a sealed enclosure, a quantity of liquid contact material in the enclosure, a circuit-interrupting barrier within the enclosure having an aperture for allowing the liquid contact medium to complete a circuit through the switch when the switch is in closed-circuit position, and a baffle structure located approximately at the surface of the liquid contact medium for limiting the motion of the medium produced by shocks to which the switch may be subjected, said baffle structure lying in a plane which intersects the aperture in the said barrier and having a gap at the region of the aperture, whereby flow of the contact medium through the aperture is not materially impeded when the switch is moved from closed-circuit position to open-circuit position.

4. A switch comprising a pair of enclosure-forming metal parts, an apertured insulating barrier separating the said parts, a quantity of liquid contact medium within the enclosure for providing a conducting path through the aperture in the said barrier and between the said metal parts when the switch is in closed-circuit position, the barrier being effective to interrupt the continuity of said medium upon flow of the medium in one direction or the other through the said aperture, a baffle structure extending perpendicularly to the barrier on both sides of the barrier and lying in a plane which intersects the said aperture, said baffle structure having a gap which coincides with the said aperture whereby flow of the contact medium through the aperture is not materially impeded by the baffle when the switch is moved from closed-circuit position to open-circuit position.

5. An electric switch comprising a pair of cup-shaped metal parts juxtaposed to form a hollow enclosure, an apertured barrier insulatingly separating the said parts, a quantity of liquid contact medium within the said enclosure for providing a continuous conducting path through the barrier aperture and between said metal parts when the switch is in its closed-circuit position, said barrier being effective to interrupt the continuity of said path when the contact medium flows out of said aperture upon rotation of the switch to open-circuit position, and a pair of wave-limiting baffles respectively extending from the opposite faces of the said barrier toward the said cup-shaped parts in a plane which intersects the said aperture, the opposed edges of said baffles being appreciably spaced within the confines of said aperture, whereby flow of contact medium from the aperture is not materially impeded by the baffles.

6. An electric switch comprising a pair of cup-shaped metal parts juxtaposed to form a hollow enclosure, an apertured barrier insulatingly separating the said parts, liquid contact medium within the enclosure for providing a conducting path through the barrier aperture when the switch is in closed-circuit position, the barrier being effective to interrupt the said path when the contact medium flows out of said aperture upon movement of the switch to open-circuit position, and a pair of wave-limiting baffles respectively secured to the said cup-shaped parts and extending into contact with the opposite sides of the said barrier at approximately the center of the said aperture, the opposed edges of the said baffles being appreciably spaced within the confines of the aperture, whereby flow of contact medium from the aperture is not materially impeded by the baffles.

WALTER H. GERISCH.