Sept. 3, 1929. E. A. HOLMGREN 1,726,833

UPPER SHAPING MACHINE

Filed June 30, 1926 3 Sheets-Sheet 1

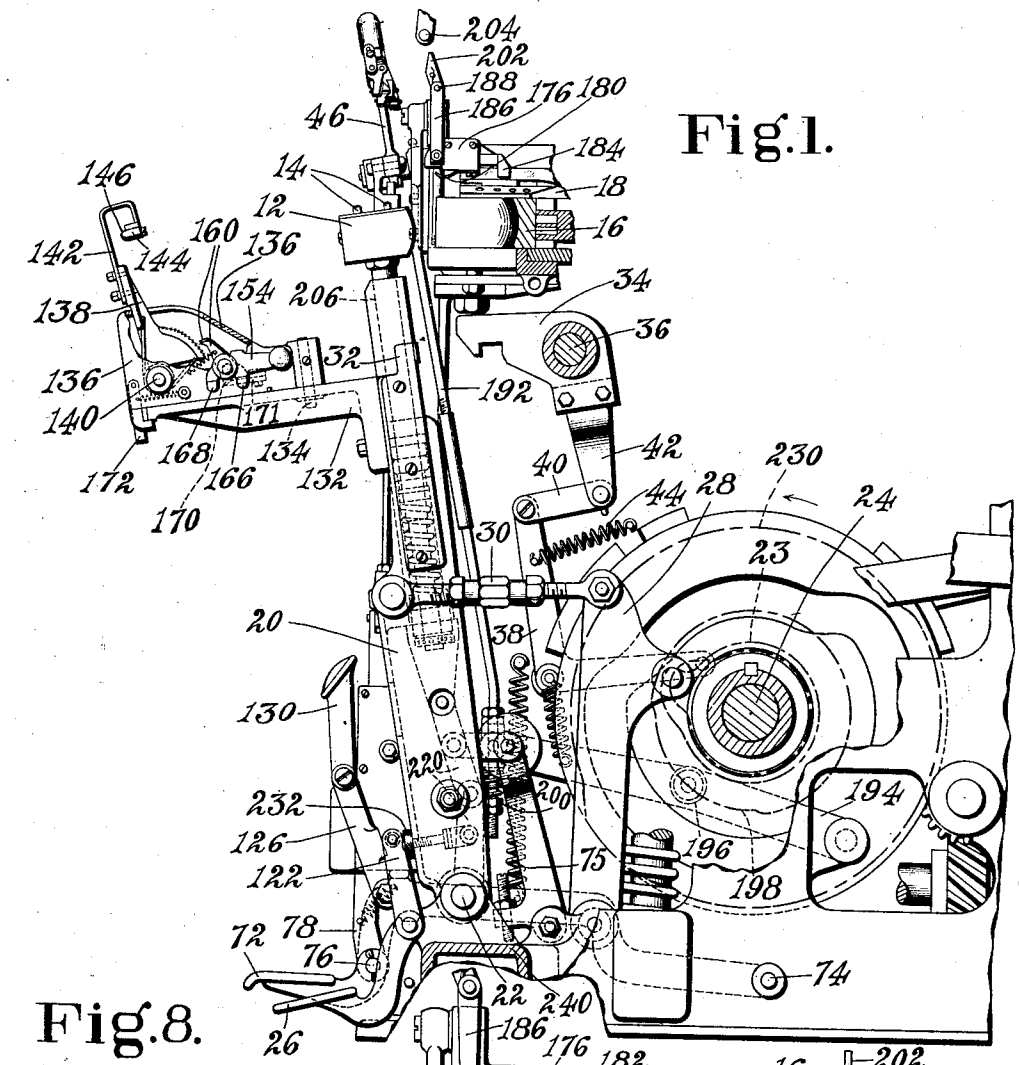

Fig.1.

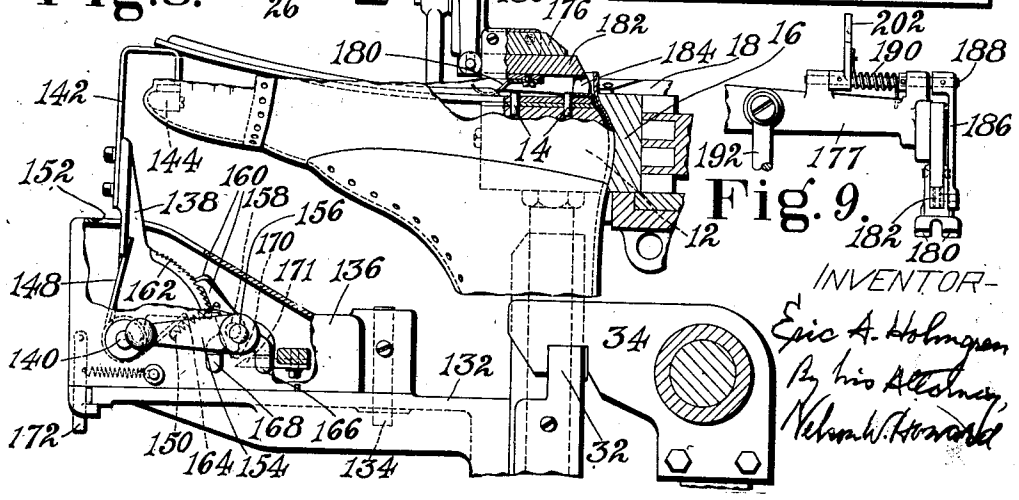

Fig.8.

Fig. 9.

INVENTOR-
Eric A. Holmgren
By his Attorney
Nelson W. Howard

Sept. 3, 1929. E. A. HOLMGREN 1,726,833

UPPER SHAPING MACHINE

Filed June 30, 1926 3 Sheets-Sheet 2

Fig. 2.

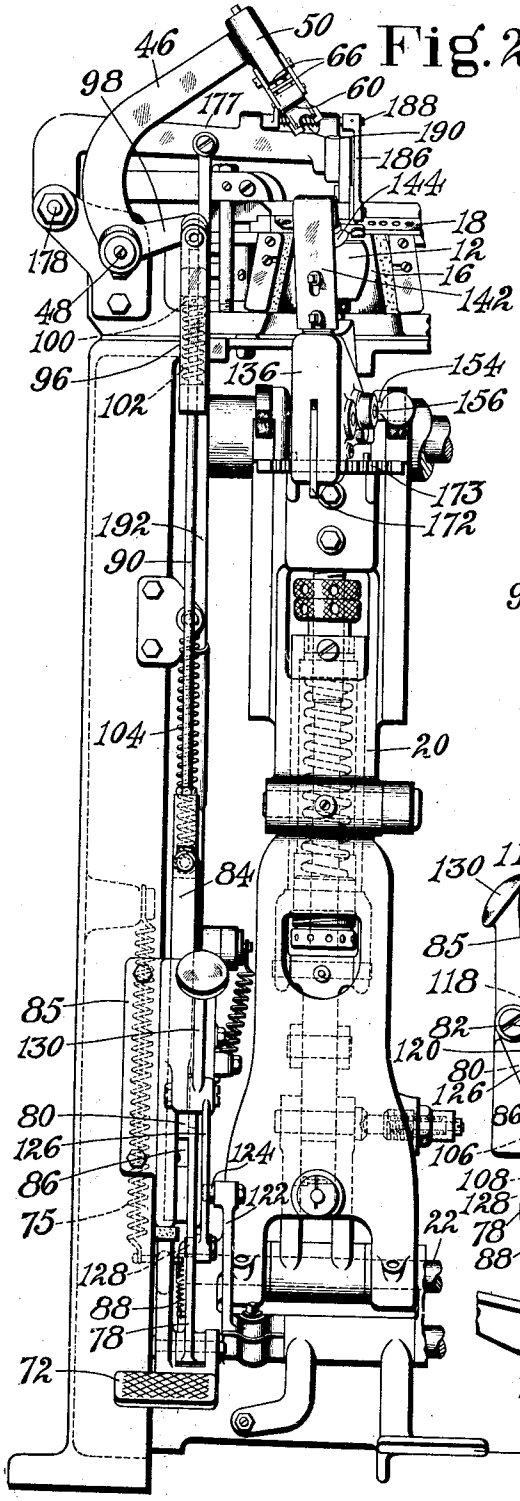

Fig. 10.

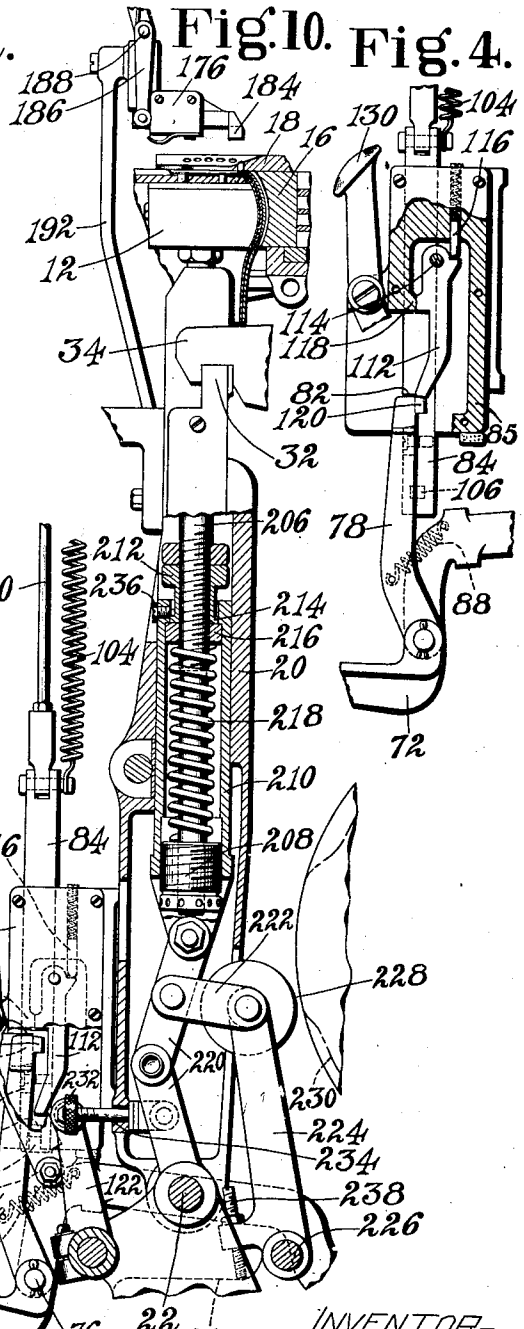

Fig. 4.

INVENTOR-
Eric A. Holmgren
By his Attorney,
Nelson Waterman

Sept. 3, 1929. E. A. HOLMGREN 1,726,833

UPPER SHAPING MACHINE

Filed June 30, 1926 3 Sheets-Sheet 3

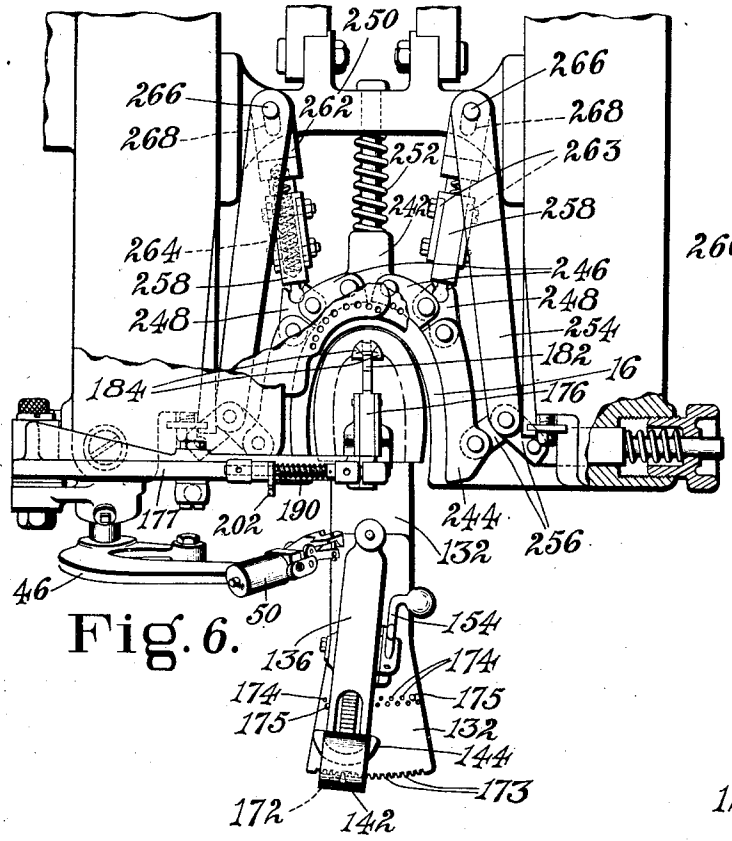

Fig. 6.

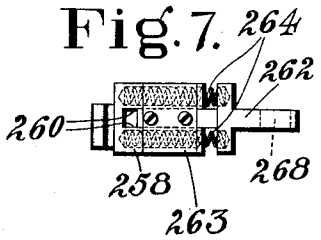

Fig. 7.

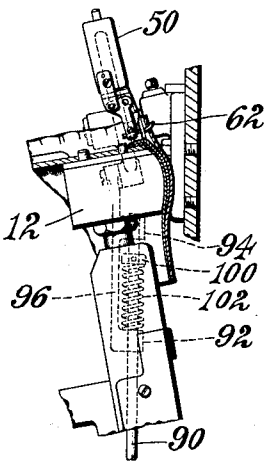

Fig. 3.

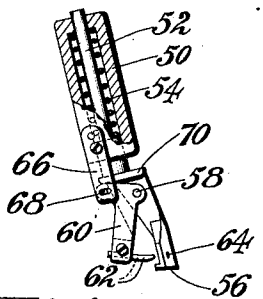

Fig. 5.

INVENTOR—

Eric A. Holmgren

By his Attorney

Nelson W. Howard

Patented Sept. 3, 1929. 1,726,833

UNITED STATES PATENT OFFICE.

ERIC A. HOLMGREN, OF LYNN, MASSACHUSETTS, ASSIGNOR TO UNITED SHOE MACHINERY CORPORATION, OF PATERSON, NEW JERSEY, A CORPORATION OF NEW JERSEY.

UPPER-SHAPING MACHINE.

Application filed June 30, 1926. Serial No. 119,670.

This invention relates to machines for use in the manufacture of boots and shoes for shaping the upper materials, and is herein illustrated as applied to a machine of the type shown and described in Letters Patent No. 1,700,970, granted on February 5, 1929 upon an application of William C. Baxter, comprising means for shaping or molding the heel end portion of upper materials, off the last, over a heel end form and over an insole to which the molded heel end of the upper is fastened while on the form. It is to be understood, however, that in various novel and useful aspects the invention is not limited to machines of the type shown in said Letters Patent.

Machines such as illustrated in the above-mentioned Letters Patent include in their organization a work support which is movable to carry the form and the shoe materials from a work-receiving position into position to present the work to the upper-shaping means, and include also a device for engaging the upper in one or more jig holes provided therein to position the upper in proper relation to the form. By the present invention, in one of its important aspects, there is provided a construction and arrangement such that the upper-positioning jigging device is operative only when the form is in its work-receiving position, the machine having mechanism for withdrawing said device from operative position prior to the movement of the form to carry the work to the upper-shaping means. One advantage in this is that the construction is much simplified, as compared with an organization in which the upper-positioning device and its controlling mechanism move with the form as heretofore. The invention further provides an upper-positioning device so constructed and arranged as to occupy a position only over the extreme rear end of the form, thus affording the operator an unobstructed view of the upper materials, including the lining and the flange of the counter, along the sides of the heel seat while he is arranging the materials in proper relation to the form. The device herein shown serves also as a clamp member at the rear end of the heel seat, and is thus adapted to press down the inturned flange of a molded counter to position the counter initially in proper relation to the form.

In accordance with a further feature of the invention, there is combined with a work-positioning device which is operative, as above set forth, only when the form is in work-receiving position, another device for applying clamping pressure over the heel end of the insole after the form has been moved to carry the work to the upper-shaping means. In the construction shown this device comprises members arranged respectively to engage the insole and press it closely down upon the form and to engage the flange of the counter and hold it in proper relation to the form until the upper materials are clamped about the form by the upper-shaping or molding means. It is also an object of the invention to improve the results obtained in wiping the margin of the upper inwardly over the form, and to this end the above-mentioned counter-holding member is arranged, in the construction shown, to serve as a retarder in engagement with the inner face of the margin of the upper during the operation of the wipers, the member being so mounted and controlled as to be forced inwardly over the form against yielding resistance by the movement of the wipers. This increases the frictional pressure of the wipers on the upper and assists in avoiding the formation of unduly prominent wrinkles in the margin of the upper about the rear end of the heel seat.

For holding the upper during the work-presenting movement of the form in the relation to the form determined by the jigging means, and also to assist in shaping the upper about the form, the machine herein shown has means for pulling or tensioning the upper forwardly about the form in the same general manner as disclosed in Letters Patent No. 1,709,833, granted on April 23, 1929 upon another application of William C. Baxter. The invention further provides improvements in upper-tensioning means, including a simple and conveniently operable construction whereby different uppers are subjected to a pull of definite extent which, as herein illustrated, may follow a preliminary yielding pull, and a construction affording provision for convenient and certain adjustment of the pulling means in accordance with the "swing" of a right or a left upper.

The above and other features of the invention, including mechanism of novel construction for applying upper-shaping pressure about the end and sides of the form, novel

means for relieving the pressure of the wipers on the upper before the wipers are retracted, and various other novel details of construction and combinations of parts, will now be more particularly described with reference to the accompanying drawings and pointed out in the claims.

In the drawings,

Fig. 1 is a view, partly in right-hand side elevation and partly in section, of as much of a machine of the type illustrated in the above-mentioned Letters Patent as it is necessary to show for an understanding of the invention, with the parts of the machine shown in their idle positions;

Fig. 2 is a view in front elevation of the portions of the machine which are shown in Fig. 1;

Fig. 3 is a view in side elevation of the form and associated parts, showing in its operative position the device for positioning the upper and the counter in proper relation to the form;

Fig. 4 shows, partly in side elevation and partly in section, portions of the mechanism for controlling the device for positioning the upper and the counter, with the parts in the positions corresponding to the operative position of the device illustrated in Fig. 3;

Fig. 5 shows the upper and counter positioning device in detail, on a larger scale;

Fig. 6 is a plan view, with parts broken away, showing portions of the means for shaping the upper about the end and the sides of the form, and illustrating the positions of the parts when the form has been moved to carry the work to the upper-shaping means, but with the shoe materials omitted and with the position of the counter flange illustrated diagrammatically;

Fig. 7 shows in detail a portion of the pressure-applying mechanism shown in Fig. 6;

Fig. 8 shows the form and associated parts, including the upper-pulling device, as they appear with the work in position for the operation of the upper-shaping means and with the insole and counter clamping device in operative position;

Fig. 9 shows in front elevation the insole and counter clamping device shown in Fig. 8; and

Fig. 10 is a view, partly in side elevation and partly in section, illustrating how the form is lowered to relieve the pressure of the wipers on the upper after the upper has been fastened to the insole.

In its general organization, except as modified for purposes of the present invention, the machine herein shown is similar to the machine shown and described in the above-mentioned Letters Patent No. 1,700,970. The machine includes an inner heel end form 12 provided with a pair of jig pins 14 arranged to project through jig holes formed in the heel end of an insole to position the insole in exact predetermined relation to the form. For shaping or molding the heel end portion of the upper materials over the form 12, there is provided a heel band 16 which clamps and shapes the upper about the end and the sides of the form, and wipers 18 which wipe the margin of the upper inwardly over the form and the insole. The form 12 is mounted, by means hereinafter described, on a work support comprising a carrier 20 which is pivoted at 22 on the base of the machine for swinging movement rearwardly to carry the form from a work-receiving position into position to present the work to the upper-shaping means. This movement of the work support is effected by means of a cam, indicated diagrammatically at 23, on a cam shaft 24 controlled by a starting treadle 26, the connections between the cam and the carrier 20 comprising a lever 28 and a link 30.

The work support or carrier 20 is provided on its opposite sides with a pair of lugs 32 which, as the carrier receives its rearward movement to present the work to the upper-shaping means, slide under a pair of hook-shaped members 34 to lock the carrier in operative position, as illustrated in Fig. 10. In the construction herein shown the members 34 are so shaped as to lock the carrier positively against movement in either direction, so that the form 12 is held rigidly in operative position irrespective of any play that there may be in the bearings of the mechanism which imparts to the carrier its rearward movement. The members 34 are mounted to rock about a shaft 36, and in the construction shown are operated by mechanism independent of that which closes the heel band 16, this mechanism comprising a bell crank 38 one arm of which carries a roll engaged by a cam on the shaft 24 and the other arm of which is connected by a link 40 to arms 42 which project downwardly from the members 34. A spring 44 connected to the bell crank 38 holds the members 34 initially in position to snap over the lugs 32 when the work support receives its rearward movement.

It will be understood that after the work support has been moved rearwardly and locked by the members 34, the heel band 16 is closed to clamp and shape the upper materials about the end and the sides of the form, and thereafter the wipers 18 are operated to wipe the margin of the upper inwardly over the insole. While the wipers remain at the end of their operative movement, tacks are driven, by means not herein shown, to fasten the margin of the upper to the insole round the end and along the sides of the heel seat. Thereafter the heel band is opened, the wipers are retracted and the form is returned to its starting position to permit the work to be removed.

For determining the proper relation of the upper to the form, there is provided

an upper-positioning or jigging device which is movable in a fixed path into and out of operative relation to the form 12 while the form is in its work-receiving position. This device comprises parts shown in detail in Fig. 5, which are carried by an arm 46 pivoted at 48 on the frame of the machine in such manner as to swing in a plane perpendicular to the upwardly presented bottom face of the form. Slidably mounted in a holder 50 on the end of the arm 46 is a plunger 52 the lower end of which is enlarged to provide a seat for one end of a spring 54 within the holder. On the lower end of the plunger 52 is a presser foot 56 arranged to engage the shoe materials on the bottom face of the form. Pivotally mounted at 58 on the presser foot 56 is a member 60 provided with a pair of curved jig pins 62 which are arranged to be projected through holes 64 in the presser foot into position to enter jig holes provided in the margin of the upper, as illustrated in Fig. 3. Pivoted on opposite sides of the holder 50 are links 66 the lower ends of which are provided with slots to receive pins 68 projecting from the member 60. Movement of the member 60 in the direction to withdraw the pins 62 from the holes 64 is limited by engagement of the member with a flange 70 formed on the plunger 52. It will be evident that, as the parts are thus constructed, the spring 54 tends to force the plunger 52 downwardly, and that the limit of such movement of the plunger is determined by engagement of the flange 70 of the plunger with the member 60 controlled by the links 66. When the arm 46 is swung downwardly, the presser foot 56 is moved into clamping engagement with the shoe materials on the bottom face of the form, and then by continued movement of the arm against the resistance of the spring 54 the member 60 is swung by the links 66 to project the pins 62 outwardly into position for the upper to be hung thereon. In the reverse movement of the arm 46 the member 60 is first operated to withdraw the pins from the holes in the upper, and thereafter the presser foot 56 is lifted and the device is returned to its starting position in which it is shown in Figs. 1 and 2.

It will be observed that in the construction shown the upper-positioning or jigging device is so formed and arranged that it is positioned only over the extreme rear end of the form, so that in arranging in proper relation to the form the upper materials, including, for example, a molded counter and a lining inside of the leather upper, the operator's view of the materials lying along the opposite sides of the heel seat is unobstructed and he is accordingly enabled to determined readily whether they are properly positioned and, if necessary, to adjust them in proper relation to the form. The presser foot 56 is thus arranged to bear on the work at the extreme rear end of the insole and is adapted to serve as a clamp member in engagement with the inturned flange of a molded counter to position the counter in proper relation to the form and the insole at the time when the upper is being adjusted in proper relation to the form. In the construction shown the jig pins 62 are arranged to engage the upper in jig holes formed in the extreme rear end of the latter at opposite sides of the back seam, and by such engagement they determine the proper heightwise and angular relation of the upper to the form.

For moving the above-described upper and counter positioning device from its idle position into operative position, there is provided a treadle 72 which is pivoted at 74 (Fig. 1) and is depressible against the resistance of a return spring 75, the treadle having pivoted thereon at 76 an upwardly extending arm 78. At its upper end the arm 78 is provided with a laterally projecting lug 80 (Fig. 2) arranged to enter a slot 82 (Fig. 10) formed in one side of a vertically slidable bar 84 mounted in a casing 85 and to engage a hardened bearing block 86 which is fastened in the lower end of the slot 82. A spring 88 connected to the arm 78 holds the lug 80 in the slot 82 except when movement is imparted to the arm 78 to disconnect it from the bar 84 in the manner hereinafter described. For connecting the upper end of the bar 84 to the arm 46 there is provided a rod 90 the upper end of which is slidably mounted in lugs 92 and 94 (Fig. 3) of a member 96 which is pivotally connected to an arm 98 integral with the arm 46, these two arms forming a bell crank. Fast on the rod 90 is a collar 100 which bears on the upper end of a spring 102 the lower end of which is seated on the lug 92. It will thus be seen that when the treadle 72 is depressed the bar 84 is moved downwardly by the connecting arm 78, and that the arm 46 is thereby swung downwardly through the connections described, the spring 102 yielding in the latter part of the movement of the treadle after the presser foot 56 has engaged the shoe materials and the pins 62 have been projected outwardly into position to receive the upper. The downward movement of the bar 84 is effected against the resistance of a spring 104 which acts, when permitted, to return the parts to their idle positions. The limit of the upward movement of the bar 84 is determined by a lug 106 (Fig. 10) which is formed on the bar and is arranged to enter a slot 108 in the casing 85 and to engage the casing at the upper end of the slot.

When the upper and counter positioning device has been moved into operative posi-

tion by depression of the treadle 72, it is retained in that position by a latch 112 (Fig. 4) which is pivoted at 114 in the casing 85 and is controlled by a spring plunger 116 which holds it normally in a position determined by its engagement with a lug 118 on the casing. For the purpose in view, the latch is arranged to engage the upper face of a lug 120 formed on the arm 78. By reference to Fig. 10 it will be seen that when the bar 84 is in its uppermost position, the lug 120 is over a laterally projecting lower end of the latch 112, and it will be understood that when the bar receives its downward movement, the lug engages the laterally projecting portion of the latch and swings the latch to one side until it is permitted to snap over the upper face of the lug.

The return of the upper-positioning device to its idle position results normally from depression of the starting treadle 26 before the treadle has been moved far enough to start the machine in operation and thus to cause the form to receive its work-presenting movement toward the upper-shaping instrumentalities. For this purpose there is mounted to swing with the treadle 26 in fixed relation thereto an arm 122 which is provided with a roll 124 in engagement with another pivoted arm 126 having thereon a roll 128 for engaging the arm 78. By depression of the treadle 26 the arm 78 is thus swung forwardly and disconnected from the bar 84, whereupon this bar and the parts connected therewith are returned to their idle positions and the treadle 72 also is returned to idle position by its spring 75. The machine is further provided with means whereby the operator may, if desired, cause the upper and counter positioning device to be withdrawn from the work before depressing the starting treadle 26, this means comprising a knee lever 130 which in the construction shown is integral with the arm 126 and may be used to operate the latter so as to disconnect the arm 78 from the bar 84 independently of the operation of the starting treadle.

For holding the upper in the relation to the form determined by the upper-jigging means, and also to assist in shaping the heel end of the upper properly over the form, there is provided means for pulling or tensioning the upper forwardly about the form and for holding it under tension as the form is moved to carry the work to the upper-shaping or molding means. As illustrated in Figs. 1 and 8, there is secured to the front of the carrier 20 a bracket 132 upon which is pivotally mounted at 134 a holder 136 comprising a casing having mounted within it means for engaging the toe end of the upper and for applying thereto a forward pull. This means comprises an arm 138 which is pivoted at 140 in the holder 136 and has adjustably secured on its upper end portion a metal strap 142. The strap 142 is so shaped as to extend upwardly, then rearwardly, and then downwardly, and has fastened to its depending end a member 144 for engaging the toe of the upper. As herein illustrated, the machine is adapted for use in molding the heel ends of uppers the toe ends of which have been previously molded and have thereon inturned marginal portions shaped to conform substantially to the angle between the feather and the rib of a welt shoe insole, and the member 144 is so formed as to apply the pull to the inner face of the molded toe without impairing the molded shape. It will be seen (Figs. 1 and 6) that the member 144 is curved similarly to the contour of the toe and is provided with a shoulder 146 to support the inturned angularly shaped margin of the upper. The member 144 thus supports the toe at a height determined by its adjustment on the arm 138, there being a screw-and-slot connection between the member and the arm for purposes of heightwise adjustment, as illustrated in Fig. 2. While it is preferable that the member 144 be thus shaped to conform approximately to the curvature of that portion of the molded toe which it engages, exact conformity in this respect is not essential, and it is accordingly practical to use the same member in operating upon uppers of different styles and sizes. It will be further observed that the strap 142 is arranged to support the toe end of the insole the heel end of which is positioned on the form by the pins 14.

The arm 138 is constantly under the influence of a spring 148 which is coiled about the axis 140 with one of its ends engaging a pin 150 on the holder 136 and its other end bearing against the arm. This spring tends to impart forward swinging movement to the arm 138 and the member 144, and when the parts are in idle position maintain the arm in engagement with a shoulder 152 on the holder 136. When the operator first positions an upper about the form 12 he swings the arm 138 rearwardly and mounts the molded toe on the member 144, whereupon the spring 148 acts to pull the upper with sufficient tension to hold it from slipping down over the form while the operator is mounting an insole on the form and is thereafter adjusting the upper materials in proper relation to the form. After the heel end of the upper materials have thus been positioned in proper relation to the form, it is desirable to subject the upper to further tension, both in order to pull it tightly about the form before it is engaged by the molding means and also to insure against its displacement relatively to the form after the jigging device has been withdrawn. For this purpose there is provided, on the outside of the holder 136, a crank arm 154 fast on a rock shaft 156 and arranged to operate a

crank pin 158 on which are mounted a pair of pawls 160 for engaging ratchet teeth 162 provided on an arc-shaped portion of the arm 138. It will be seen that the end of one of the pawls 160 is slightly in advance of the end of the other, so that one or the other of the pawls will be ready to act on the arm 138 in whatever position the arm may be. Springs 164, connected at their opposite ends respectively to the pawls and to the holder 136, tend to swing the pawls into engagement with the ratchet teeth or to hold them in such engagement. The crank arm 154 is movable through an arc of substantially 180° from an idle position, in which it is in engagement with a stop 166 on the holder 136 (Fig. 1), to a position determined by another stop 168 (Fig. 8).

When the arm 154 is in idle position, tails 170 on the pawls 160 are engaged by a fixed plate 171 in the casing 136, and the pawls are thus held out of engagement with the ratchet teeth, as illustrated in Fig. 1. The arm 138 is then free to be moved rearwardly as far as desired to engage it with the end of an upper, and after it has been thus engaged assumes, under the influence of the spring 148, a position which will vary in accordance with differences in the lengths of different uppers and differences in the resistance of different upper materials. When the arm 154 is swung from its idle position to its other limit of movement, the pawls 160 are released by the plate 171 and permitted to engage the ratchet teeth, and are then operated by the movement of the arm to impart positively further pulling movement to the arm 138. It will be evident that, whatever may be the position of the arm 138, the pawls will arrive in operative engagement with the ratchet teeth at the same point in the movement of the arm 154, and accordingly will act to impart upper-pulling movement of substantially the same extent to the arm 138 in operating upon different uppers. There is thus imparted to each upper a pull of fixed predetermined extent supplemental to the initial pull effected by the spring 148, so that insurance is afforded that each upper will be subjected to sufficient tension. The relation of the crank pin 158, which carries the pawls, to the other parts of the device is such that when the arm 154 is in upper-pulling position it is maintained in that position, in engagement with the stop 168, by the resistance of the upper, and when the arm is in idle position it is maintained in engagement with the stop 166 by the action of springs 164 on the pawls 160. It will be understood that when the arm 154 is swung from operative position to idle position, the tails 170 of the pawls are carried into engagement with the plate 171 which acts to release them from the ratchet teeth.

The pivotal mounting 134 of the holder 136 permits the upper-pulling device to be swung in either direction laterally of the form to position it in accordance with the lateral swing of a right or a left upper. The arm 138 and its upper-engaging member 144 may thus be positioned for pulling movement substantially in the direction of the longitudinal median line of the forepart of the upper. This results more nearly in equalization of the strains applied along the opposite sides of the upper than if the pull were applied in the direction of the longitudinal median line of the heel end form, and also avoids danger of lateral displacement of the back seam of the upper relatively to the form by the force of the pull. To maintain the holder 136 in adjusted position, the holder is provided with a spring-controlled latch 172 arranged to engage teeth 173 formed on the front end of the bracket 132. To determine symmetrically opposite positions of adjustment of the holder 136 for right and left shoes of the same size and style, there are formed in the bracket 132 a series of holes 174 in which pins 175 may be placed in selected positions to serve as stops to limit movements of the holder in opposite directions.

After the form with the shoe materials has been moved rearwardly into position for the molding operation, clamping pressure is automatically applied over the form to the insole and to the rear end of the inturned flange of the molded counter inserted between the upper and the lining. For this purpose there is provided a clamping device comprising a holder 176 which is carried by a vertically movable arm 177 (Fig. 2) pivoted at 178 on a bracket on the frame of the machine. On its lower face the holder 176 carries a pair of spring fingers 180 (Fig. 9) arranged to bear on the insole between the opposite rear end portions of the insole rib. Mounted in the holder 176 is a horizontally movable slide 182 which has a pair of downwardly extending fingers 184 arranged to bear on the flange of the counter at the rear end of the heel seat and spaced apart in such manner as to clear the rearmost jig pin 14 when the slide 182 is moved forwardly in a manner to be described. At its front end the slide 182 is connected to a lever 186 which is fast on a rock shaft 188 mounted in spaced bearings on the top of the arm 177, and acting upon this rock shaft is a torsion spring 190 which tends to impart rearward movement to the slide 182. As the parts are initially positioned, the lower end of the lever 186 is held by the spring 190 in engagement with a part of the holder 176, as shown in Fig. 8, and the fingers 184 are thus in position to engage the flange of the counter when the arm 177 is swung downwardly. For swinging the arm 177 there is provided a link 192 which connects the arm to one end of a

lever 194 (Fig. 1), this lever being pivoted at its opposite end and carrying a roll 196 engaged by a cam indicated diagrammatically by dot-and-dash lines at 198. The connections between the link 192 and the lever 194 include a spring 200 which may yield in response to continued movement of the lever after the clamping device has been carried into engagement with the work.

After the clamping pressure has been applied to the insole and to the flange of the counter as above described, the holder 176 remains in operative position until after the margin of the upper has been wiped inwardly over the form and has been fastened to the insole by the tacking mechanism. As the wipers 18 are advanced and closed to wipe the upper over the form, the slide 182 and its fingers 184 are forced inwardly against the resistance of the spring 190 by the pressure of the margin of the upper against the fingers. In this operation the fingers 184 perform the additional useful function of a retarder by holding the margin of the upper at the rear end of the form upstanding against the edges of the wipers, thus increasing the frictional pressure of the wipers on the upper and at the same time assisting in preventing the upper from wrinkling unduly at any point about the rear end of the heel seat as its margin is gathered inwardly by the wipers. The cam 198 is preferably so shaped as to relieve somewhat the downward pressure of the fingers 184 upon the heel seat prior to the inward movement of the wipers, and thus facilitate the sliding movement of the fingers over the shoe materials.

In order to prevent breakage of the parts in the operation of the tacking mechanism (not shown) in case the machine is operated idly without any wipers therein, there is provided additional automatic means which is operative under those conditions to retract the slide 182. For this purpose there is fast on the rock shaft 188 an upwardly extending finger 202 having a wedge face arranged to be engaged by a pin 204 (Fig. 1) carried by a downwardly movable part of the tacker mechanism which operates in the manner fully described in Letters Patent No. 1,700,970.

The form 12 is fast on the upper end of a rod 206 which is slidably mounted in a bearing in the upper end of the carrier 20 and is also slidable at its lower end in an opening formed in a member 208 threaded in the lower end of a sleeve 210 which is also slidable in the carrier 20. Adjustably threaded on the rod 206 is a sleeve 212 the lower end of which is provided with a flange 214 within an opening in the upper end of the sleeve 210. Between the member 208 and a washer 216 which engages the lower end of the sleeve 212 is a spring 218. The spring thus provides a yielding connection between the member 208 and the rod 206 when upward movement is imparted to the sleeve 210, such upward movement being effected, as described in the last-mentioned Letters Patent, for the purpose of moving the form 12 upward the wipers and thus increasing the pressure of the wipers on the margin of the upper in time relation to the wiping operation.

For effecting such upward movement of the sleeve 210 the machine is provided, as heretofore, with a toggle 220 comprising a pair of links one of which is connected to the sleeve 210 and the other pivoted at 22 on the base of the machine, the upper link of the toggle being connected by a link 222 to a lever 224 which is pivoted at 226 on the frame and carries a roll 228 arranged to be engaged by a peripheral cam 230 on the cam shaft 24. Initially the toggle 220 is broken toward the right (Fig. 1) with the form 12 in a lowered position determined by a stop nut 232 threaded on a rod 234 which is pivoted on the lower toggle link, this nut being arranged to engage the carrier 20, as illustrated in Fig. 1, to limit the breaking of the toggle. When the carrier 20 is swung to carry the form into operative position, the roll 228 is moved into position to be operated by its cam 230 at the proper time in the cycle, so as to straighten the toggle and thus to impart upward movement yieldingly to the form.

The machine herein shown is further constructed to lower the form 12 and the shoe materials before the wipers are retracted from over the form, so as to prevent the wipers from dragging on the upper in their outward movement. This result is accomplished by an additional rise on the cam 230 which acts to break the toggle 220 toward the left, as indicated in Fig. 10. When this action occurs the form is moved positively downward by reason of the engagement of the end of a screw 236 on the sleeve 210 with the upper face of the flange 214 of the sleeve 212. Such lowering of the form takes place after the heel band 16 has been opened to release its pressure on the upper. After the form has been started downwardly by the action of the cam, it may continue its downward movement by gravity far enough to carry the roll 228 away from the cam, as illustrated in Fig. 10, such movement being limited by a stop screw 238 which is mounted in a lug projecting from the lever 224 and is arranged to engage a part of the base 240 of the machine. Preferably, as shown, the form will thus be moved downwardly to a position lower than its initial position, or its position in the overwiping operation, to insure proper clearance between the upper and the wipers. When the carrier 20 receives its forward movement, in the return of the parts to starting position, the screw 238, by its

engagement with the base 240, holds the lever 224 from swinging, so that the lever acts to break the toggle 220 back to its original position in response to the forward movement of the carrier.

As illustrated in Fig. 6, the heel band 16 for clamping and shaping the upper about the end and sides of the form comprises an inner portion of leather or other suitable material which is mounted upon supports or holders somprising an end block 242, side members 244, and links 246 and 248 connecting said blocks and side members. For closing the band about the form there is provided a sliding cross-head 250 which acts directly through a spring 252 upon the end block 242 at the intermediate portion of the band, and acts on the side members 244 through links 254 and yieldingly controlled toggles 256, substantially as shown and described in Letters Patent No. 1,700,970. Pressure is further applied to the links 248, at what may be termed the rear corners of the band, by novel mechanism comprising yielding links operated by the cross-head 250. Each of these links comprises a member 258 swiveled at one end in a bearing in the corresponding band link 248 and provided with a slideway 260 in which is mounted another member 262 which is connected to the cross-head 250, the member 262 having fast thereon plates 263 overlapping the opposite sides of the member 258. Mounted in sockets in the member 258 are springs 264 which bear on lugs extending from the member 262. Between the cross-head 250 and each member 262 there is a lost-motion connection comprising a pin 266 on the cross-head which projects into a slot 268 in the member 262. Through these connections the cross-head 250 thus acts to apply band-closing pressure to the links 248 after pressure has begun to be applied through the spring 252 to the block 242 at the intermediate portion of the band. It will be further seen that the pressures applied to the links 248 are in forward directions substantially lengthwise of the form 12, or in directions more nearly parallel to the lengthwise dimension of the form than are lines drawn perpendicular to the upper-engaging face of the corner portions of the band. There is thus a forward pulling action on the links 246 and the intermediate portion of the band, so that there is no tendency to counteract the forward pressure of the block 242, but rather to increase this pressure. In this manner the band is drawn tightly about the rear end of the form and is pressed inwardly at the end, the corners and the sides of the form.

In the operation of the machine, briefly summarized, the operator places the heel end of the upper materials about the form 12, swings the upper-pulling arm 138 rearwardly and engages the member 144 with the previously molded toe, and then releases the arm to cause the upper to be subjected to the comparatively light tension of the spring 148, which is sufficient to hold the heel end of the upper from slipping downwardly over the form. The operator then places an insole upon the form in the position determined by the pins 14 and with its toe end resting upon the upper-pulling device, and thereafter adjusts the counter and the lining relatively to the form and the insole. By depression of the treadle 72 the upper-positioning and counter-clamping device is then swung downwardly into operative position over the rear end of the form, with the presser foot 56 engaging the flange of the counter and the jig pins 62 projecting rearwardly through the holes in the presser foot, the latch 112 automatically locking the device in operative position by engaging the lug 120 of the arm 78, as illustrated in Fig. 4. The operator next hangs the upper upon the jig pins 62, slips the heel end of the upper downwardly about the form enough to straighten it relatively to the jig pins, and thereafter swings the crank arm 154 from its idle position to its operative position (Fig. 8) to subject the upper to increased forward tension.

After the shoe materials have been positioned and the upper has been subjected to a forward pull in the manner above described, the operator depresses the starting treadle 26 to start the operation of the machine, the treadle acting in the first part of its movement to disconnect the arm 78 from the latch 112 and from the bar 84 and thus to release the upper-jigging and counter-clamping device, which is thereupon withdrawn from the work and returned to its idle position. During the rearward movement of the form to carry the work toward the molding means the forward tension applied to the upper by the pulling device serves to hold the upper from displacement relatively to the form. As soon as the form has arrived at the limit of its rearward movement the device for clamping the insole and the flange of the counter is swung downwardly into operative position, and then the heel band 16 is operated to clamp the upper materials about the end and the sides of the form. The wipers 18 are then advanced and closed to wipe the margin of the upper inwardly over the flange of the counter and over the insole, and during this operation the counter-clamping fingers 184 act as a retarder in engagement with the margin of the upper while being forced inwardly over the heel seat by the pressure of the wipers, the cam 198 having relaxed the downward pressure of the fingers 184 upon the heel seat. It is contemplated that the wipers will receive only one inward wiping movement, and near the end of this movement the toggle 220 is straightened to force the form up toward the wipers and thus to increase the molding pres-

sure of the wipers on the upper. While the wipers are at the end of their wiping movement the tacks are driven to fasten the upper and the flange of the counter to the insole. Thereafter the parts of the machine are returned to starting positions, the heel band being first opened, and then the toggle 220 moved to the position illustrated in Fig. 10 to lower the form before the wipers are retracted. After the carrier 20 has been swung forwardly with the shoe materials, the operator swings the crank arm 154 of the upper-pulling device to its idle position, disengages the toe of the upper from the member 144 and then removes the shoe materials from the form.

While the invention is herein illustrated and described in its application to welt shoe work, it will be understood that it is not limited to that type of work.

Having described the invention, what I claim as new and desire to secure by Letters Patent of the United States is:—

1. In a machine of the class described, the combination with means for shaping the heel end portion of upper materials over a form and over an insole on the form, and a form movable from a work-receiving position into position to present the work to the upper-shaping means, of different devices for positioning different portions of the shoe materials in proper relation to the form, comprising an upper-positioning device arranged for operation only when the form is in work-receiving position to engage the heel end of the upper in one or more jig holes provided therein and another device arranged to apply clamping pressure over the insole after the form has received its work-presenting movement.

2. In a machine of the class described, the combination with means for shaping the heel end portion of upper materials over a form and over an insole on the form, and a form movable from a work-receiving position into position to present the work to the upper-shaping means, of a device arranged to engage the heel end of the upper in one or more jig holes provided therein to position the upper in proper relation to the form when the form is in work-receiving position, means for withdrawing said device from operative position prior to the work-presenting movement of the form, means for holding the upper in position determined by said device during said movement of the form, and another device movable into position to apply clamping pressure over the insole after the form has received its work-presenting movement.

3. In a machine of the class described, the combination with means for shaping the heel end portion of upper materials over a form and over an insole on the form, and a form movable from a work-receiving position into position to present the work to the upper-shaping means, of an upper-positioning device arranged to engage the heel end of the upper in one or more jig holes provided therein to position the upper in proper relation to the form when the form is in work-receiving position, means for insuring movement of said device out of operative position prior to the work-presenting movement of the form, and another device movable into position to apply clamping pressure over the insole after the form has received its work-presenting movement.

4. In a machine of the class described, the combination with means for shaping the heel end portion of upper materials over a form and over an insole on the form, and a form movable from a work-receiving position into position to present the work to the upper-shaping means, of an upper-positioning device arranged to engage the heel end of the upper in one or more jig holes provided therein to position the upper in proper relation to the form when the form is in work-receiving position, said device being so mounted as to prevent it from moving with the form while movable relatively to the form into and out of operative position, means for withdrawing said device from operative position prior to the work-presenting movement of the form, and another device movable into position to apply clamping pressure over the insole after the form has received its work-presenting movement.

5. In a machine of the class described, the combination with means for shaping the heel end portion of upper materials over a form and over an insole on the form, and a form movable from a work-receiving position into position to present the work to the upper-shaping means, of an upper-positioning device arranged to engage the upper in one or more jig holes provided therein to position the upper in proper relation to the form when the form is in work-receiving position, manual means for moving said device into operative position after the shoe materials have been mounted on the form, means for insuring movement of said device out of operative position while the form is in work-receiving position, another device for applying clamping pressure over the insole after the form has received its work-presenting movement, and automatic means for moving said last-named device into clamping position.

6. In a machine of the class described, the combination with means for shaping the heel end portion of upper materials over a form and over an insole on the form, and a form movable from a work-receiving position into position to present the work to the upper-shaping means, of an upper-positioning device arranged to engage the heel end of the upper in one or more jig holes provided therein to position the upper in proper relation to the form when the form is in work-receiving position and having also means for pressing

the flange of a molded counter toward the bottom face of the insole, means for withdrawing said device from operative position while the form is in work-receiving position, and another device movable into position to apply clamping pressure to the flange of the counter after the form has received its work-presenting movement.

7. In a machine of the class described, the combination with means for shaping the heel end of an upper over a form, and a form movable from a work-receiving position into position to present the work to the upper-shaping means, of a device for engaging the heel end of the upper in one or more jig holes provided therein to position the upper in proper relation to the form when the form is in work-receiving position, said device being so mounted as to prevent it from moving with the form while movable relatively to the form into and out of operative position.

8. In a machine of the class described, the combination with means for shaping the heel end of an upper over a form, and a form movable from a work-receiving position into position to present the work to the upper-shaping means, of a device for engaging the heel end of the upper in one or more jig holes provided therein to position the upper in proper relation to the form when the form is in work-receiving position, said device being movable relatively to the form into and out of operative position, and controlling mechanism constructed to insure the withdrawal of said device from operative position prior to the work-presenting movement of the form.

9. In a machine of the class described, the combination with means for shaping the heel end of an upper over a form, and a form movable from a work-receiving position into position to present the work to the upper-shaping means, of a device for engaging the heel end of the upper in one or more jig holes provided therein to position the upper in proper relation to the form when the form is in work-receiving position, said device being movable relatively to the form into and out of operative position, means for starting the operation of the machine, and mechanism controlled by said starting means for withdrawing said device from operative position prior to the work-presenting movement of the form.

10. In a machine of the class described, the combination with means for shaping the heel end of an upper over a form, and a form movable from a work-receiving position into position to present the work to the upper-shaping means, of a device for engaging the heel end of the upper in one or more jig holes provided therein to position the upper in proper relation to the form when the form is in work-receiving position, said device being movable relatively to the form into and out of operative position, a treadle for starting the operation of the machine, mechanism controlled by said starting treadle for withdrawing said device from operative position prior to the work-presenting movement of the form, and means for controlling said mechanism independently of the starting treadle to withdraw said device at the will of the operator.

11. In a machine of the class described, the combination with means for shaping the heel end of an upper over a form, and a form movable from a work-receiving position into position to present the work to the upper-shaping means, of a device for engaging the heel end of the upper in one or more jig holes provided therein to position the upper in proper relation to the form when the form is in work-receiving position, said device being pivotally supported to swing in a fixed path from a normal idle position removed from the form into operative position adjacent to the bottom face of the form.

12. In a machine of the class described, the combination with means for shaping the heel end portion of upper materials over a form and over an insole on the form, of an upper-positioning device having means for engaging the heel end of the upper in one or more jig holes provided therein to position the upper in proper relation to the form, said device being so constructed and arranged as to occupy a position only over the rear portion of the heel end of the insole while leaving the remainder of the heel end of the shoe bottom within view of the operator.

13. In a machine of the class described, the combination with means for shaping the heel end portion of upper materials over a form and over an insole on the form, of an upper-positioning device having means for engaging the heel end of the upper in one or more jig holes provided therein to position the upper in proper relation to the form, said device being constructed to serve also as a presser foot in clamping engagement with the inturned flange of a molded counter at the rear end only of the heel seat face of the insole while leaving the remainder of the heel end of the shoe bottom within view of the operator.

14. In a machine of the class described, the combination with means for shaping the heel end portion of upper materials over a form and over an insole on the form, of a clamping device arranged to be positioned over the heel end of the insole, said clamping device comprising a member for engaging the insole and a member for engaging the inturned flange of a molded counter at the rear end only of the heel seat face of the insole.

15. In a machine of the class described, the combination with means for shaping the heel end portion of upper materials over a form and over an insole on the form, and a form movable from a work-receiving position into position to present the work to the upper-

shaping means, of a device movable to apply clamping pressure over the heel end of the insole after the work-presenting movement of the form, said device comprising different members for engaging the insole and the flange of a counter respectively.

16. In a machine of the class described, the combination with means for shaping the heel end portion of upper materials over a form and over an insole on the form, and a form movable from a work-receiving position into position to present the work to the upper-shaping means, of a device mounted for movement into engagement with the inturned flange of a molded counter over the margin of the insole, after the work-presenting movement of the form, to position the counter in proper relation to the form.

17. In a machine of the class described, the combination with means for shaping the heel end portion of upper materials over a form and over an insole on the form, including wipers for wiping the margin of the upper inwardly over the insole, of a device arranged to engage the inturned flange of a molded counter to position the counter in proper relation to the form, said device being movable inwardly over the form in response to the pressure of the wipers.

18. In a machine of the class described, the combination with means for shaping the heel end portion of upper materials over a form and over an insole on the form, including wipers for wiping the margin of the upper inwardly over the insole, of a device arranged to engage the inturned flange of a molded counter to position the counter in proper relation to the form, said device being mounted for movement inwardly over the form against yielding resistance in response to the pressure of the wipers and constructed to serve as a retarder in engagement with the inner face of the upper as it is thus moved inwardly.

19. In a machine of the class described, the combination with means for shaping the heel end portion of upper materials over a form and over an insole on the form, including wipers for wiping the margin of the upper inwardly over the insole, of a device arranged to engage the inturned flange of a molded counter at the rear end of the heel seat to position the counter in proper relation to the form, said device being mounted for forward movement lengthwise of the form in response to the pressure of the wipers and constructed to serve as a retarder in engagement with the inner face of the upper in such movement.

20. In a machine of the class described, the combination with means for shaping the heel end portion of upper materials over a form and over an insole on the form, including wipers for wiping the margin of the upper inwardly over the insole, of means for applying clamping pressure over the heel end of the insole, comprising a member for engaging the insole and a member for engaging the inturned flange of a molded counter, said last-named member being movable inwardly over the insole in response to the pressure of the wipers and constructed to serve as a retarder in engagement with the inner face of the upper.

21. In a machine of the class described, the combination with means for shaping the heel end portion of upper materials over a form and over an insole on the form, including wipers for wiping the margin of the upper inwardly over the insole, and a form movable from a work-receiving position into position to present the work to the upper-shaping means, of a clamping device movable into operative relation to the work after the work-presenting movement of the form and comprising a member arranged to engage the inturned flange of a molded counter to position the counter in proper relation to the form, said member being movable inwardly over the insole in response to the pressure of the wipers and constructed to serve as a retarder in engagement with the inner face of the upper as it is thus moved inwardly.

22. In a machine of the class described, the combination with means for shaping the heel end portion of upper materials over a form and over an insole on the form, including wipers for wiping the margin of the upper inwardly over the insole, and a form movable from a work-receiving position into position to present the work to the upper-shaping means, of a retarder automatically movable into operative position inside of the margin of the upper after the form has received its work-presenting movement, said retarder being movable inwardly over the form against yielding resistance in response to the pressure of the margin of the upper thereon in the overwiping operation.

23. In a machine of the class described, the combination with means for shaping the heel end portion of upper materials over a form and over an insole on the form, including wipers for wiping the margin of the upper inwardly over the insole, of a device for applying clamping pressure over the heel end of the insole, comprising a member for engaging the inturned flange of a molded counter, said member being mounted for movement inwardly over the form in response to the pressure of the wipers and constructed to serve as a retarder in engagement with the inner face of the upper, and automatic means for relaxing the pressure of said member on the counter prior to the operative movement of the wipers.

24. In a machine of the class described, means for tensioning an upper forwardly about a form, comprising an upper-pulling member arranged to engage the forepart of the upper and movable lengthwise of the form to pull the upper, spring means for impart-

ing to said member pulling movement of variable extent depending upon the resistance of the upper, and additional means for imparting to said member further pulling movement of fixed extent.

25. In a machine of the class described, means for tensioning an upper forwardly about a form, comprising an upper-pulling member arranged to engage the forepart of the upper and movable lengthwise of the form to pull the upper, spring means for imparting to said member pulling movement of variable extent depending upon the resistance of the upper, and additional means constructed to impart to said member positively further pulling movement of invariable extent from any point to which the member is moved by the spring means.

26. In a machine of the class described, means for tensioning an upper forwardly about a form, comprising an upper-pulling member arranged to engage the forepart of the upper and movable lengthwise of the form to pull the upper, spring means for imparting to said member pulling movement of variable extent depending upon the resistance of the upper, and manually-operated means comprising a rotatable member having a fixed throw for imparting to said upper-pulling member further pulling movement of invariable extent.

27. In a machine of the class described, means for tensioning an upper forwardly about a form, comprising an upper-pulling member arranged to engage the forepart of the upper and movable lengthwise of the form to pull the upper, spring means for imparting to said member pulling movement of variable extent depending upon the resistance of the upper, and pawl and ratchet means for imparting to said member positively additional pulling movement.

28. In a machine of the class described, means for tensioning an upper forwardly about a form, comprising an upper-pulling member arranged to engage the forepart of the upper and movable lengthwise of the form to pull the upper, spring means for imparting to said member pulling movement of variable extent depending upon the resistance of the upper, and pawl and ratchet mechanism including a manually-operated crank arm having a fixed throw for imparting to said member further pulling movement of definite extent.

29. In a machine of the class described, means for tensioning an upper forwardly about a form, comprising a spring-controlled member arranged to be moved rearwardly to engage the forepart of the upper and then, when released, to subject the upper automatically to a yielding pull, and means for imparting to said member pulling movement of fixed extent from any position assumed by the member at the end of the yielding pull.

30. In a machine of the class described, means for tensioning an upper forwardly about a form, comprising a spring-controlled member arranged to be moved rearwardly to engage the forepart of the upper and then, when released, to subject the upper automatically to a yielding pull, and manually-operated mechanism for imparting to said member positively further pulling movement.

31. In a machine of the class described, means for tensioning an upper forwardly about a form, comprising a spring-controlled member arranged to be moved rearwardly to engage the forepart of the upper and then, when released, to subject the upper automatically to a yielding pull, and manually-operated pawl and ratchet mechanism comprising a member having a fixed throw for imparting to said upper-pulling member additional upper-pulling movement of invariable extent.

32. In a machine of the class described, means for tensioning an upper forwardly about a form, comprising a spring-controlled device arranged to be moved rearwardly to engage the forepart of the upper and then, when released, to subject the upper automatically to a yielding pull, and manually-operated mechanism arranged to effect an operative connection with said device after the yielding pull and then to operate the device to subject the upper to a positive pull.

33. In a machine of the class described, means for tensioning an upper forwardly about a form, comprising a spring-controlled device arranged to be moved rearwardly to engage the forepart of the upper and then, when released, to subject the upper automatically to a yielding pull, said device having ratchet teeth thereon, a pawl for engaging said ratchet teeth, and means for holding the pawl out of engagement with the ratchet teeth to permit the rearward movement of said device and for thereafter engaging the pawl with the ratchet teeth and operating the device thereby to subject the upper to a further pull.

34. In a machine of the class described, means for tensioning an upper forwardly about a form, comprising a spring-controlled device arranged to be moved rearwardly to engage the forepart of the upper and then, when released, to subject the upper automatically to a yielding pull, said device having ratchet teeth thereon, a pawl for engaging said ratchet teeth, a member for operating said pawl to impart further upper-pulling movement to said device, and means arranged to act automatically in response to movement of said member in one direction to disengage the pawl from the ratchet teeth to permit the rearward movement of said device.

35. In a machine of the class described, means for tensioning an upper forwardly

about a form, comprising a member arranged to engage the forepart of the upper and movable lengthwise of the form to pull the upper, and a manually-operated device having an automatically determined extent of movement for imparting to said member positively operative movements of the same extent in pulling different uppers.

36. In a machine of the class described, means for tensioning an upper forwardly about a form, comprising a member arranged to engage the forepart of the upper and movable lengthwise of the form to pull the upper, and a pawl and ratchet device including a crank arm having a fixed throw for imparting to said member operative movements of the same extent in pulling different uppers.

37. In a machine of the class described, means for tensioning an upper forwardly about a form, comprising a device arranged to engage the forepart of the upper and movable to pull the upper, said device having ratchet teeth thereon, a pawl for engaging said ratchet teeth, a member for operating said pawl to impart upper-pulling movement to said device, and means arranged to act automatically in response to movement of said member in one direction to disengage the pawl from the ratchet teeth.

38. In a machine of the class described, means for tensioning an upper forwardly about a form, comprising a device arranged to engage the forepart of the upper and movable to pull the upper, said device having ratchet teeth thereon, a pawl for engaging said ratchet teeth, a crank arm having a fixed throw from an idle position to another position for operating the pawl to impart upper-pulling movement to said device, and means arranged to act automatically in the return of the crank arm to idle position to disengage the pawl from the ratchet teeth.

39. In a machine of the class described, means for tensioning forwardly about a form an upper the toe end of which has been previously molded substantially to the shape desired for the finished shoe, comprising a spring-controlled member arranged to engage the inner face of the molded toe and to subject the upper to a yielding pull, and means for imparting to said member further pulling movement of invariable extent from any position assumed by the member at the end of the yielding pull.

40. In a machine of the class described, means for tensioning forwardly about a form an upper the toe end of which has been previously molded substantially to the shape desired for the finished shoe, comprising a spring-controlled member arranged to engage the inner face of the molded toe and to subject the upper to a yielding pull, and manually-operated pawl and ratchet mechanism for imparting to said member positively additional pulling movement.

41. In a machine of the class described, the combination with means for shaping the heel end of an upper over a form, and a support movable to carry the form rearwardly from a work-receiving position into position to present the upper to said upper-shaping means, of mechanism carried by said support for subjecting the upper yieldingly to comparatively light forward tension such as to permit the operator to adjust the upper relatively to the form and for thereafter subjecting the upper positively to increased forward tension.

42. In a machine of the class described, the combination with means for shaping the heel end of an upper over a form, and a support movable to carry the form rearwardly from a work-receiving position into position to present the upper to said upper-shaping means, of means carried by said support for tensioning the upper forwardly about the form, comprising a spring-controlled member arranged to be moved rearwardly into position to engage the forepart of the upper and then, when released, to subject the upper automatically to a yielding pull, and a manually operated device having a fixed range of movement for imparting to said member further pulling movement of invariable extent.

43. In a machine of the class described, the combination with means for shaping the heel end of an upper over a form, and a support movable to carry the form rearwardly from a work-receiving position into position to present the upper to said upper-shaping means, of means carried by said support for tensioning the upper forwardly about the form, comprising a spring-controlled member for subjecting the upper to a yielding pull, and a pawl and ratchet device for operating said member positively to subject the upper to a further pull.

44. In a machine of the class described, the combination with means for shaping over a form the heel end of an upper the toe end of which has been previously molded substantially to the shape desired for the finished shoe, and a support movable rearwardly to carry the form from a work-receiving position into position to present the work to the upper-shaping means, of means carried by said support for tensioning the upper forwardly about the form, comprising a spring-controlled member arranged to engage the inner face of the molded toe and to pull the upper yieldingly, and a manually operated device comprising a member having a fixed range of movement for imparting to said upper-pulling member positively additional pulling movement of invariable extent.

45. In a machine of the class described, means for tensioning an upper forwardly

about a form, comprising an upper-pulling member arranged to engage the forepart of the upper and movable lengthwise of the form to pull the upper, said member being adjustably movable to different positions laterally of the form, and means for securing the member in adjusted position.

46. In a machine of the class described, means for tensioning an upper forwardly about a form, comprising an upper-pulling member arranged to engage the forepart of the upper and movable lengthwise of the form to pull the upper, said member being adjustably movable laterally of the form into positions corresponding to the lateral swing of right and left shoes, stops for determining symmetrically opposite positions of adjustment of the member for right and left shoes respectively, and means for securing the member in adjusted position.

47. In a machine of the class described, the combination with means for shaping the heel end of an upper over a form, of a device arranged to engage the toe end of the upper and to tension the upper forwardly about the form, said device being mounted for adjustment into different positions such as to apply its pull to a right or a left upper in a direction substantially parallel to the longitudinal median line of the forepart of the upper, and means for securing said device in adjusted position.

48. In a machine of the class described, the combination with means for shaping the heel end of an upper over a form, of a device arranged to engage the toe end of the upper and to tension the upper forwardly about the form, said device being adjustably mounted for swinging movement into different positions corresponding to the lateral swing of right and left uppers for applying its pull to each upper in a direction substantially parallel to the longitudinal median line of the forepart of the upper, stops for determining symmetrically opposite positions of adjustment of the device, and means for holding said device in adjusted position.

49. In a machine of the class described, the combinatiton with means for shaping over a form the heel end of an upper the toe end of which has been previously molded substantially to the shape desired for the finished shoe, of a device shaped to bear on the inner face of the end of the molded toe and movable to subject the upper to a lengthwise pull, said device being adjustable laterally of the form into different positions such as to apply its pull to a right or a left upper in a direction substantially parallel to the longitudinal median line of the forepart of the upper, and means for holding said device in adjusted position.

50. In a machine of the class described, a flexible band for clamping the heel end of an upper about a form, and means for closing said band about the form comprising members connected to the rear corners of the band and movable to apply thereto pressures directed substantially lengthwise of the form.

51. In a machine of the class described, a flexible band for clamping the heel end of an upper about a form, and means for closing said band about the form comprising a member arranged to apply forward pressure to the intermediate portion of the band and other members connected to the rear corners of the band and arranged to apply thereto throughout the closing of the band about the form pressures in directions more nearly parallel to the lengthwise dimension of the form than are lines perpendicular to the upper-engaging face of said corners of the bands.

52. In a machine of the class described, a flexible band for clamping the heel end of an upper about a form, and means for closing said band about the form comprising a forwardly movable crosshead and a plurality of members operated by said crosshead and arranged to apply respectively to the intermediate portion and to the rear corners of the band pressures all directed substantially lengthwise of the form.

53. In a machine of the class described, a flexible band for clamping the heel end of an upper about a form, and means for closing said band about the form comprising a forwardly movable crosshead, a member operated by said crosshead for applying pressure to the intermediate portion of the band, and yieldable links also operated by said crosshead and directly connected to the rear corners of the band for applying pressure thereto.

54. In a machine of the class described, a flexible band for clamping the heel end of an upper about a form, and means for closing said band about the form comprising mechanism for applying pressure first to the intermediate portion of the band and thereafter to the rear corners of the band.

55. In a machine of the class described, a flexible band for clamping the heel end of an upper about a form, and means for closing said band about the form comprising a forwardly movable crosshead, a member operated by said crosshead for applying pressure first to the intermediate portion of the band, and lost-motion connections between the crosshead and the rear corners of the band for applying pressure at the corners after substantial pressure has been applied at the intermediate portion.

56. In a machine of the class described, a flexible band for clamping the heel end of an upper about a form, and means for closing said band about the form comprising a forwardly movable crosshead, a yieldable member operated by said crosshead for applying pressure first to the intermediate portion of the band, and yieldable links arranged to

be operated by the crosshead only after substantial pressure has been applied to the intermediate portion of the band to apply to the rear corners of the band pressures directed substantially lengthwise of the form.

57. In a machine of the class described, the combination with wipers for wiping the margin of an upper inwardly over a form, of automatic means for moving the form toward the wipers to increase their pressure on the upper and for thereafter moving it reversely to a position farther from the wipers than in the overwiping operation prior to the withdrawal of the wipers from over the form.

58. In a machine of the class described, the combination with wipers for wiping the margin of an upper inwardly over a form, of a toggle for moving the form in directions substantially perpendicular to the plane of the wipers, and automatic means for straightening said toggle to increase the pressure of the wipers on the upper and for thereafter moving the toggle farther in the same direction to break it and thereby retract the form from the wipers.

59. In a machine of the class described, the combination with means for shaping the heel end of an upper over a form, comprising wipers for wiping the margin of the upper inwardly over the form, and a support movable rearwardly to carry the form toward the upper-shaping means and forwardly to withdraw it from said means, of a toggle for moving the form in directions substantially perpendicular to the plane of the wipers, means for straightening said toggle to move the form toward the wipers and for thereafter moving the toggle farther in the same direction to break it and retract the form from the wipers, and means operative in response to the forward movement of said support to restore the toggle to its initial condition.

In testimony whereof I have signed my name to this specification.

ERIC A. HOLMGREN.