J. HICKS.

CONTAINER.

APPLICATION FILED MAY 3, 1918.

1,272,951. Patented July 16, 1918.

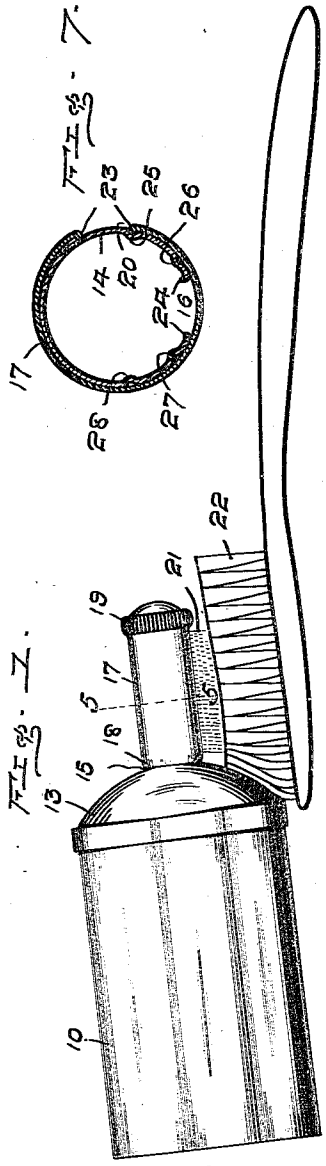

Fig. 7.

Fig. 1.

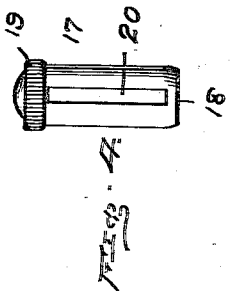

Fig. 4.

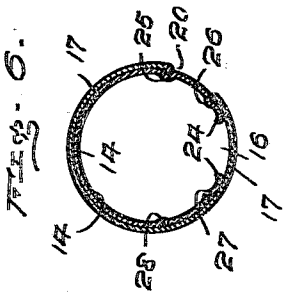

Fig. 6.

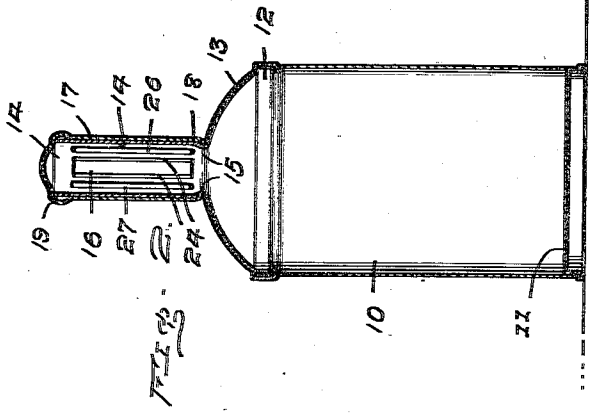

Fig. 2.

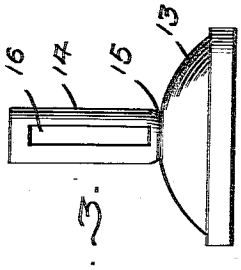

Fig. 3.

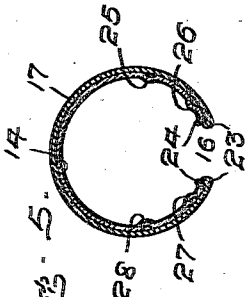

Fig. 5.

Inventor
John Hicks
Fitzgerald & Co
Attorneys

UNITED STATES PATENT OFFICE.

JOHN HICKS, OF EDGEWORTH, PENNSYLVANIA.

CONTAINER.

1,272,951. Specification of Letters Patent. Patented July 16, 1918.

Application filed May 3, 1918. Serial No. 232,289.

To all whom it may concern:

Be it known that I, JOHN HICKS, a citizen of the United States, residing at Edgeworth, in the county of Allegheny and State of Pennsylvania, have invented certain new and useful Improvements in Containers; and I do hereby declare the following to be a full, clear, and exact description of the invention, such as will enable others skilled in the art to which it appertains to make and use the same.

This invention relates to containers for securely holding their contents and readily dispensing the same and while the illustrations and descriptions in this application define the article as specially adapted for containing and dispensing tooth powder, it will be readily understood that the use of the device is not limited to tooth powder, and that it is adapted to contain and dispense any other desired substances.

The primary object of the invention is to provide a container of the specified class which may be economically manufactured and which will be reliable in use and wherein are provided simple means for holding the parts against movement without the application of force when in either their open or closed positions.

A further object is to provide a container of the specified class with simple means for holding the parts in closed position after use, and further means to hold the parts in a different closed position for storage or transportation purposes.

With these objects in view, the invention consists in the improved construction, arrangement and combination of parts which will be hereinafter fully described and afterward particularly claimed.

In order that the construction and operation thereof may be readily comprehended, I have illustrated an approved embodiment of my invention in the accompanying drawing and will now proceed to fully describe the same with reference to said drawing in which—

Figure 1 represents a view of my improved container, in side elevation and in position for pouring a charge of tooth powder upon a tooth brush,

Fig. 2, a view of my container in vertical section, in an upright position,

Fig. 3, a view in elevation of the top and neck separate from the body of the container,

Fig. 4, a view in elevation of the cap separate from the container,

Fig. 5, a sectional view on an enlarged scale taken on the transverse plane indicated by the broken line 5—5 of Fig. 1, with the parts in open position,

Fig. 6, a sectional view similar to that of Fig. 5 with the parts in the closed position used after use, and

Fig. 7, a sectional view similar to those of Figs. 5 and 6, with the parts in the closed position for storage or transportation.

Like reference characters mark the same parts wherever they appear in any of the figures of the drawing.

Referring specifically to the drawing, 10 indicates the body of the container which may be of any suitable material or size and preferably cylindrical, being provided with a bottom 11 constructed in any desired manner, and prepared, as at 12, to receive a top 13 upon which is formed, or it might be secured, a neck 14 with open upper end, an annular groove 15 being formed at the junction of the top and neck, and a longitudinal slot 16 being formed in the side of the neck.

The cap is indicated at 17, being closed at its outer end, which cap is slipped over the neck and has its lower edge turned or crimped, as at 18, into the groove 15 sufficiently tight to maintain the cap in position but at the same time to permit it to be turned upon the neck, by grasping its upper end, which is preferably knurled, as at 19, to facilitate its grasping. The cap is also provided with a longitudinal slot 20.

When the cap is turned on the neck, as in Figs. 1 and 5, to a position which brings the slots 16 and 20 into alinement with each other, there is an opening formed through which the contents of the container may be discharged, as in Fig. 1, which shows how tooth-powder, as at 21, may be dropped out upon a tooth brush 22, the powder falling in the longitudinal and transverse centers of the brush to prevent wastage thereof, this open position being thus maintained by the slightly inturned edges 23 of the slot 20 engaging the edges 24 of the slot 16, as clearly shown in Fig. 5.

Longitudinal inward depressions or grooves are formed in the neck, as at 25, 26, 27 and 28, adjacent to and parallel with the slots 16 and 20 and when the cap is turned from the position of Fig. 5, a distance

slightly greater than the width of the slots, the closed position after use as seen in Fig. 6 is reached, in which position the inturned edges 23 of the slot 16 in the cap engage in the depressions 25 and 26 of the neck and hold the cap closed over the slot of the neck with all necessary tightness for the parts after use.

When the container is in a more secure position, for purposes of storage or transportation, the cap is turned to the position of Fig. 7, in which the inturned edge of the slot in the cap is removed from engagement in the depressions 25 and 26 from the position of Fig. 6 to that of Fig. 7, in which one of said inturned edges engages in the depression 25 and the other edge bears against the outside of the neck, in which the slots are further overlapped by the adjacent parts and the closed position maintained.

If the cap is turned in the opposite direction from the open position of Fig. 5, the relative position of the parts as shown in Fig. 6 will also be reached, and the edges of the cap slot will engage in the depressions 27 and 28, instead of in the depressions 25 and 26.

Having thus fully described my invention, what I claim as new and desire to secure by Letters Patent of the United States, is:—

1. A container comprising a body, top and neck and a cap embracing and rotatable upon the neck, the cap and neck being provided with longitudinal slots, the edges of the slot of the cap being turned slightly inward, and a pair of depressions being formed in the neck at one side of and parallel with its slot and in relative position to engage both inturned edges of the cap slot, and thus close the slots.

2. A container comprising a body, top and neck and a cap embracing and rotatable upon the neck, the cap and neck being provided with longitudinal slots, the edges of the slot of the cap being turned slightly inward, and a pair of depressions being formed in the neck at one side of and parallel with its slot and in relative position to engage both inturned edges of the cap slot, and thus close the slots, one of said inturned edges of the cap slot being adapted, upon the further turning of the cap, to bear upon the outside of the cap, while the other inturned edge engages in the next succeeding depression.

3. A container comprising a body, top and neck and a cap embracing and rotatable upon the neck, the cap and neck being provided with longitudinal slots, the edges of the slot of the cap being turned slightly inward, and a pair of depressions being formed in the neck at each side of and parallel with its slot and in relative position to engage both inturned edges of the cap slot, and thus close the slots.

In testimony whereof I have signed my name to this specification in the presence of two subscribing witnesses.

JOHN HICKS.

Witnesses:
B. A. SPAHR,
C. H. KAUFMAN.