June 6, 1950 H. C. FOSBERG 2,510,807

FILING EQUIPMENT

Filed Nov. 23, 1948 3 Sheets-Sheet 1

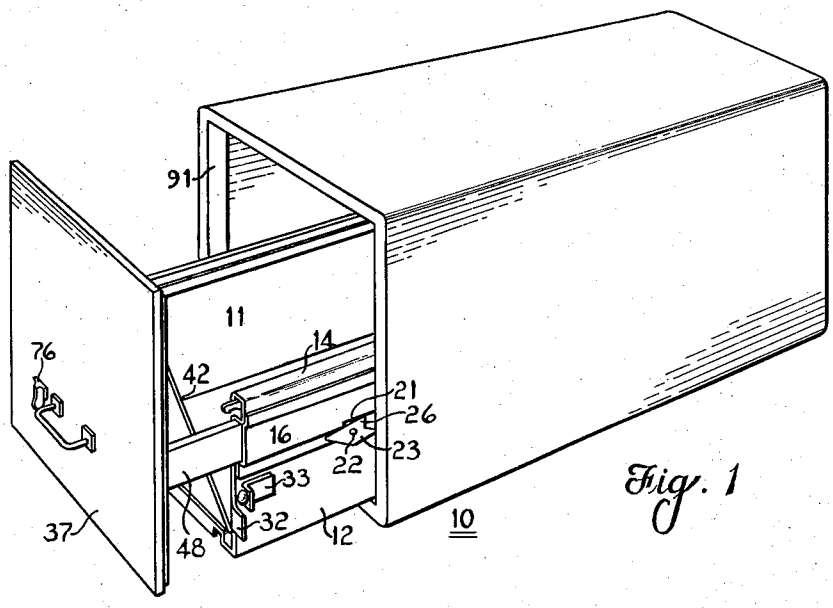

Fig. 1

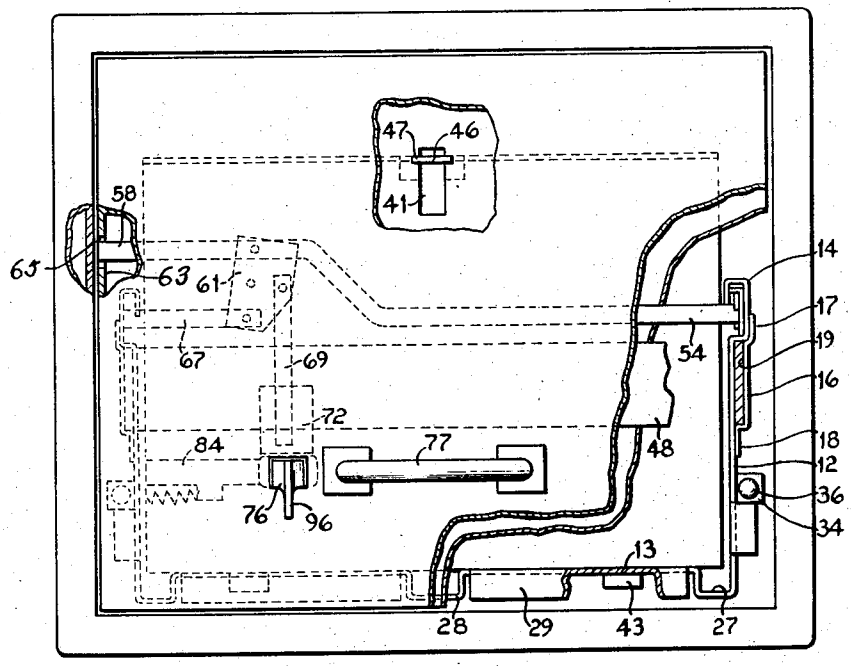

Fig. 2

Inventor

Henry C. Fosberg

By Richmond S. Hayes

Attorney

June 6, 1950 H. C. FOSBERG 2,510,807

FILING EQUIPMENT

Filed Nov. 23, 1948 3 Sheets-Sheet 2

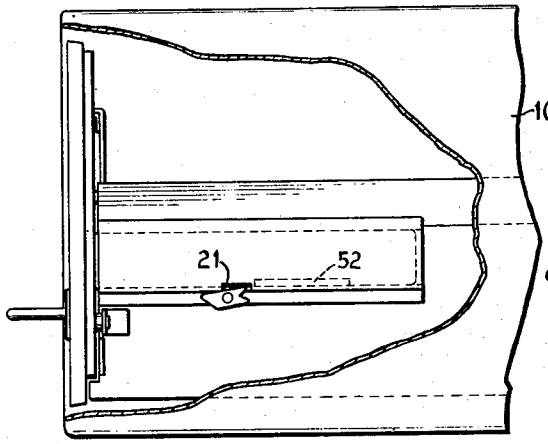

Fig. 3

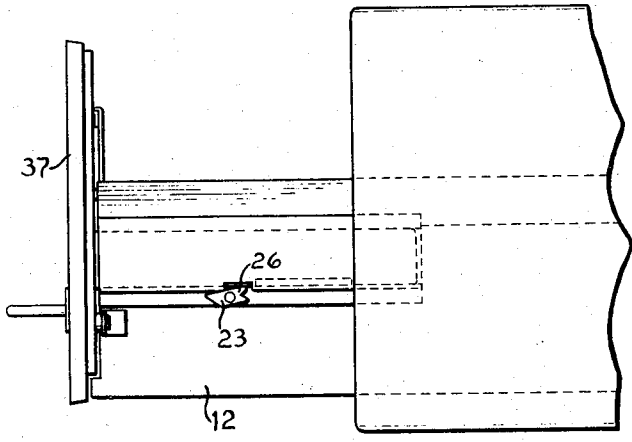

Fig. 4

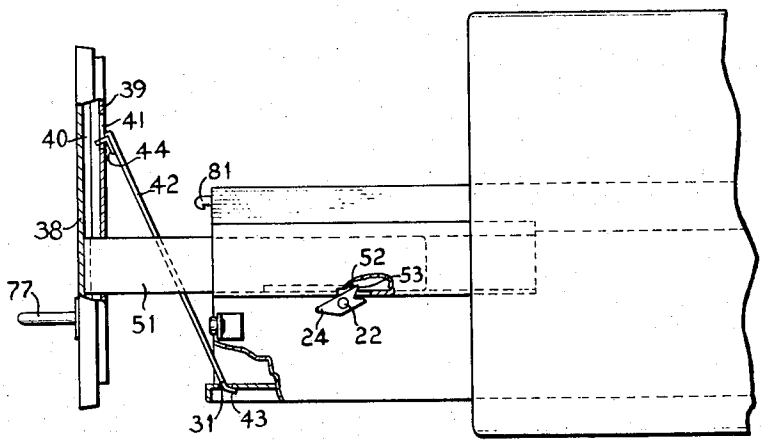

Fig. 5

Inventor

Henry L. Fosberg

By Richmond L. Hayes

Attorney

June 6, 1950 H. C. FOSBERG 2,510,807

FILING EQUIPMENT

Filed Nov. 23, 1948 3 Sheets-Sheet 3

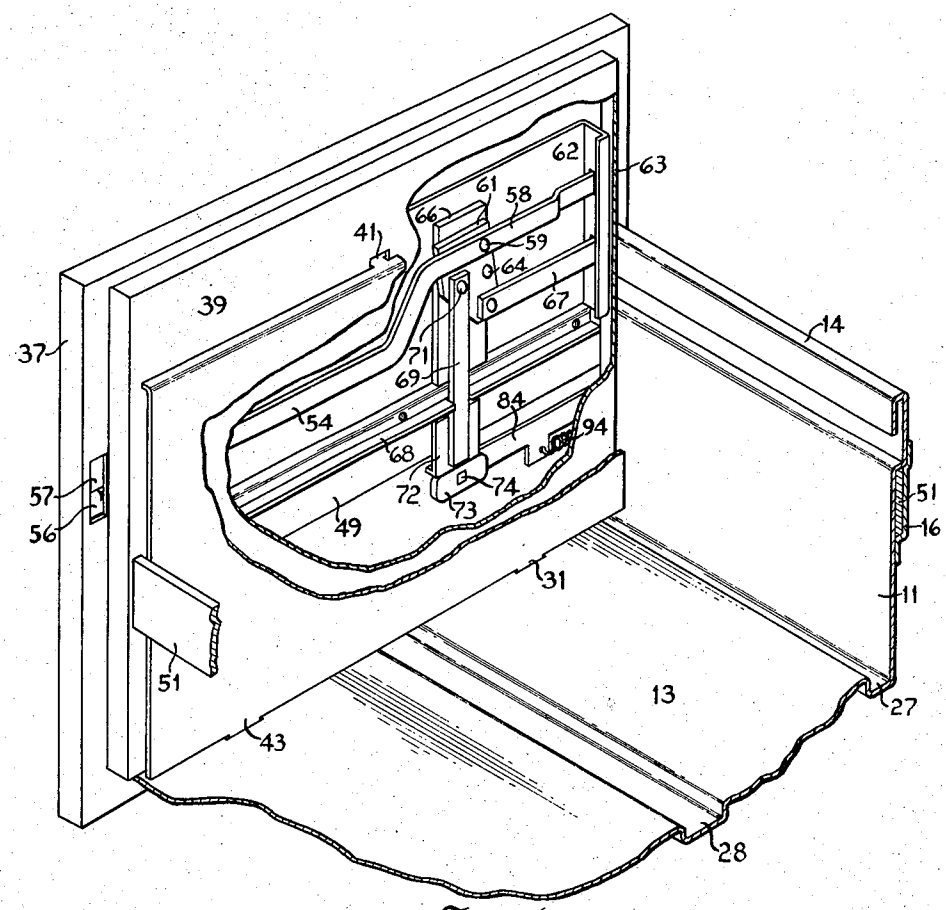

Fig. 6

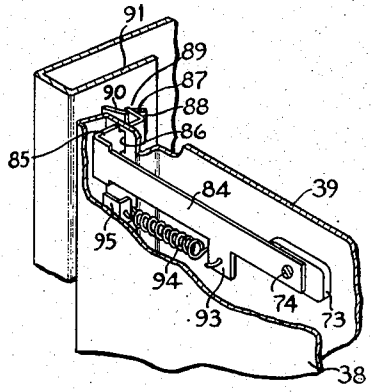

Fig. 8

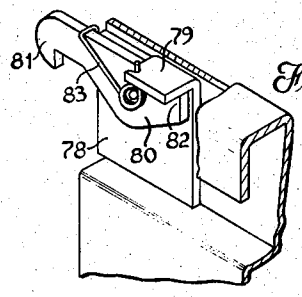

Fig. 7

Inventor

Henry L. Fosberg

By

Richmond A. Hayes

Attorney

Patented June 6, 1950 2,510,807

UNITED STATES PATENT OFFICE

2,510,807

FILING EQUIPMENT

Henry C. Fosberg, Jamestown, N. Y., assignor to Watson Manufacturing Company, Inc., Jamestown, N. Y., a corporation of New York

Application November 23, 1948, Serial No. 61,699

8 Claims. (Cl. 45—94)

1

This invention relates to filing equipment and more particularly to improvements in a file drawer wherein expansion means is provided to facilitate filing operations.

More specifically, the invention relates to improvements in the structure of a file drawer over those shown and described in my pending application Serial No. 19,729, filed April 8, 1948. In this application there is disclosed a file drawer having the usual side, base, and rear walls, in conjunction with a drawer head or front that can be extended to occupy a position such that the space within the drawer will be enlarged in the direction of the drawer's length. In the above referred to application, it was brought out that the purpose of all filing equipment, beyond that of the accessible storage of records, is to enable such filing unit or drawer to be filled substantially to capacity. Further, when such file drawers are so filled, considerable difficulty has been encountered by the usual users of such equipment in the careful handling of records.

The present invention has for a purpose and object the provision of structure which will enable a user to easily expand the contents of a file drawer to facilitate convenient and quick insertion and removal of records in accordance with the above mentioned disclosure and, at the same time, provide additional structure by means of which manipulation of the drawer head, to enable expanding the file contents, may be improved upon and the structure, in general, safeguarded against improper use.

Other objects and advantages of the invention will be more fully understood from a consideration of the following specification, taken in conjunction with the accompanying drawings; and in which:

Fig. 1 is a perspective view of a file cabinet in which a drawer, embodying one form of the invention, is shown in partly opened position;

Fig. 2 is an enlarged front elevational view of the cabinet and drawer shown in Fig. 1, parts of the drawer front being broken away to disclose certain of the structural details;

Fig. 3 is a fragmentary side elevational view of the file cabinet, parts being broken away to show the drawer and drawer head in closed position;

Fig. 4 is a view similar to Fig. 3 and shows the drawer partially extended from the file cabinet;

Fig. 5 is a further fragmentary side elevational view of the file cabinet, showing the drawer partly withdrawn and the drawer head extended;

Fig. 6 is an enlarged fragmentary perspective

2

view of the rear of the drawer head, parts being broken away to disclose certain of the details of the drawer head and drawer locking structure;

Fig. 7 is an enlarged fragmentary perspective view showing the latching means employed to secure the drawer head in abutment with the front edges of the drawer; and

Fig. 8 is an enlarged fragmentary perspective view, showing details of the structure by which the drawer is latched against withdrawal from the cabinet.

Referring more particularly to the drawing, the reference numeral 10 is employed to generally designate a cabinet adapted to receive a drawer embodying one form of the invention. The structure of the cabinet forms no part of the present invention and it is, therefore, immaterial that it is shown as capable of accommodating only a single drawer instead of the usual four drawers. It will also be understood that any drawer slide or other suspension means, by which the drawer is rendered freely movable with respect to the cabinet, constitutes no part of the invention and is therefore neither shown nor described.

Mounted in the cabinet 10 is a drawer that includes side walls 11 and 12, connected by a base wall 13. A conventional rear wall (not shown) may be joined in any suitable manner to the rear ends of the side and base walls. Each side wall, along its upper edge, may be formed with a conventional channel 14 in which to receive the usual arms of a drawer follower. At the forward end of each side of the drawer, and directly beneath the channel 14, a horizontally disposed strap 16 is provided which includes a top flange 17 that is laterally offset to engage and be permanently secured to the outer vertical wall of the channel 14. The lower edge of this strap is inwardly offset and terminates in a flange 18 that is permanently joined to the drawer side wall. The strap 16, in co-operation with the drawer side wall, provides a passageway 19 that, at its forward end, terminates flush with the ends of the side wall. A slot 21 is made through the lower portion of strap 16 to give access to the passageway 19. Mounted on this flange, by means of a pivot pin 22, is a dog 23. This dog includes a weighted end 24 and latching arm 26. Rotation of the dog 23 about its pivot swings arm 26 into or out of the passageway 19 through slot 21.

The base wall 13 of the drawer, as may be seen in Fig. 2, is formed with substantially full length marginal reinforcing channels 27 and a central channel 28. The forward end of the base wall, between channels 27 and 28, is formed with a

turned down stiffening flange 29. More or less midway between channels 27 and 28, are slots 31. The side walls, at their forward edges, are each provided with a short, offset flange 32. These flanges serve to act as positive stops for abutment of the drawer head hereinafter described. Directly above each flange 32 is a bracket 33, having an outwardly extending flange 34 that is set slightly rearwardly of the plane of the flange 32. Flange 34 mounts a resilient bumper 36, the head of which projects somewhat beyond the vertical plane of flange 32.

The drawer is closed at its forward end by a drawer head, generally indicated by the numeral 37. This head includes a front panel 38 and rear panel 39. These panels are interfitted substantially as shown, and the inner panel is inwardly offset to provide a space or compartment 40 in the head. A slot 41 is made in the upper, central portion of the inner panel 39. A tiltable file board 42, at its lower end, is provided with a pair of inclined tabs 43 which project into the slots 31 of the bottom wall 13. Attached to the upper edge of this board is a bracket 44 that includes an offset flange or tongue 46 which projects into the slot 41 and is prevented displacement therefrom by laterally extending lugs 47.

A U-shaped member 48, in the drawer head 37, is secured in any suitable manner along its base portion 49. Side bars 51 of this member project into the passageways 19 of the drawer sides 11 and 12. Adjacent their free ends, the lower edges of these bars are formed with elongated notches 52. Member 48 is of sufficient strength to support the drawer head under all conditions of use of the file and enables movement of this head from the position of abutment with the drawer sides (Fig. 4) into extended position (Fig. 5). The arms 26 of dogs 23 do not project through slots 21 into the passageways 19 when the drawer head is in retracted position. However, when the drawer head is extended, the notches 52 register with slots 21 and allow arms 26 to swing upwardly into the passageways 19 to the full depth of said notches. The drawer head may extend to a point such that the arms 26 contact shoulders 53 which form the rear edges of slots 52.

Attention is now particularly directed to structure which serves to latch the drawer in closed position within the cabinet, permit withdrawal of the drawer as a unit, or enable extension of the drawer head following withdrawal of the drawer. Located in the space 40 in the drawer head is a generally horizontal bar 54, having one end 56 aligned with a slot 57 formed in the rear face of one of the flanges of the drawer head, substantially as shown. The other end of bar 54, as may be noted in Figs. 2 and 6, is offset upwardly and includes a further portion 58 which, through a pin 59, is joined to a swing plate 61. The end of portion 58 projects through a slot in a reinforcing plate 62 and terminates within a slot 65 in a side flange 63 of the inner drawer head panel 39. The swing plate 61 is mounted by a pin 64 on an upright 66. Also pivotally joined to the plate 61 is a short bar 67 that is in the plane of bar 54 and extends through the end flange of reinforcing plate 62 and, although not shown in the drawing, terminates in an end that registers with a further slot 57 in another rear face of the drawer head front panel. In other words, the short bar 67 is intended to function in the same manner as bar 54 but on the opposite side of the drawer head and in a reverse direction. A suitable reinforcing strip 68 extends across the drawer head and is notched to receive a vertically movable bar 69. The upper end of this bar is pivotally joined, as at 71, to the swing plate 61. Attached to the lower end of the bar 69 is a contact plate 72 which rests upon a cam 73. This cam is carried by the squared portion of a shaft 74 which projects through the front panel of the drawer head and mounts a control member 76. This control member is of the nature of a thumb latch and is, therefore, located in convenient proximity to a drawer handle 77.

As has already been noted, each side wall of the drawer is formed with a conventional channel 14. Mounted in the forward end of each channel is a plate 78, having a short, horizontal flange 79. Pivotally carried by this plate is a latch 80 which includes a hook portion 81 and a rear shoulder stop 82. A spring 83, carried by the pivot pin of the latch, is engaged with said latch and said flange in a manner to urge the latch to yieldingly be held in the position shown in Fig. 7 of the drawing. The hook portions 81, when the drawer head is brought into abutment with the drawer sides, are intended to project into the slot 57 and ride up over and engage the ends of bars 54 and 67.

Referring more particularly to Fig. 8 of the drawing, means is shown by which the drawer may be latched in closed position. In the space between the panels 38 and 39 of the drawer head is located a slide plate 84. At its inner end this plate is carried by a rounded portion of the shaft 74. The other end of the slide plate 84 is formed with a right angle latch arm 85 which projects through a slot 86 in the rear panel 39. Continuing beyond the panel 39, this arm is formed with an angle flange 87, from which a return-inclined tongue 88 extends. The tongue 88 is preferably of less height than the flange 87 and, thus, top and bottom shoulders 89 are provided which are engageable with a strike 90 formed from and extending inwardly of the reinforcing channel 91. This channel serves to define one side margin of the opening in the cabinet 10. A tab 93 depends from the slide plate 84 and mounts one end of a spring 94. The other end of this spring may be secured to a bracket 95, attached to the front panel 38. It will be apparent that movement of the slide plate 84 in a lateral direction releases shoulders 89 from engagement with the strike 90 and permits withdrawal of the drawer from the cabinet.

For a clearer understanding of the advantages of the invention, it is suggested that the operation of moving the drawer from the position of Fig. 3 to that of Figs. 1 or 5 be discussed. It will be noted that with the drawer head in the position shown in Fig. 3, the tilt board 42 is in a vertical position and it may be assumed that the drawer is filled to capacity with records. An operator, to gain access to the drawer contents, grasps the handle 77 and places a thumb against the left face of control member 76. The control member is moved by the thumb in a lateral direction toward the handle, such movement causing slide plate 84 to move and withdraw the shoulders 89 from the strike 90. The drawer may now be withdrawn from the cabinet, but it will be noted that the drawer head is still in abutment with the front edges of the drawer sides. Of course, the file contents are now merely exposed to view and cannot be readily removed from the drawer in their compact state. To release the pressure

of the drawer contents, the operator now places his thumb on the lower portion 96 of the control member 76 and causes said member to be turned about its shaft 74. Due to the fact that this shaft is squared where it carries cam 73, said cam will be turned and will cause contact plate 72 and bar 69 to move upwardly. This movement of bar 69 rotates swing plate 61 in a direction to cause bars 54 and 69 to be retracted to an extent that the ends thereof are withdrawn from engagement with the hook portions 81 of latches 80. The operator may now exert a further pull on the handle 77 and the drawer head will become disengaged from the drawer proper, being supported and guided by the side bars 51. The drawer head may be extended only to the point where the arms 26 of dogs 23 contact shoulders 53. In this position of the head with respect to the body of the drawer, the board 42 has been tilted forwardly, thus allowing the contents of the drawer to expand.

It is desirable that the drawer should be withdrawn from the cabinet prior to the operation of extending the drawer head and, in order to assure this sequence of operation, the portion 58 of bar 54 has been provided. If an operator attempts to extend the drawer head before withdrawing the drawer from the cabinet by releasing latches 80, he will of course attempt to swing or turn the control member 76. It will be found that this member, in this position of the drawer, cannot be turned due to the fact that the end of portion 58, upon initial movement of bar 54, comes into contact or abutment with channel 91. This, of course, prevents sufficient movement of bars 54 and 67 to effect their release from engagement with the hook portions 81 of latches 80. However, if the operator has first manipulated the control member 76 in a manner to release the drawer for withdrawal to a position such as shown in Fig. 4 of the drawing, he may then rotate the control member as previously set out, and the end of portion 58, now being unobstructed, may project beyond the edge of the inner panel of the head.

Attention is directed to the fact that the structure described provides simple means for controlling and requiring the proper sequence of operation of a mechanism for effecting the compacting or the expanding of a file drawer contents. It is clear that the control member 76 is readily accessible to effect disengagement of the latch which holds the drawer in the cabinet and, further, that this control member may be rotated in either direction to withdraw bars 54 and 67 from engagement with the latches 80. When the control member is released, spring 94 returns all of the parts to their normal inoperative position and, thus, the ends of bars 54 and 67 again register with slots 57. When the drawer is to be closed after being extended to the position shown in Fig. 5, it is merely necessary to push on the handle 77 and the drawer head will first move into engagement with the drawer body, the hook portions 81 riding up over and into engagement with bars 54 and 67. Of course, the board 42 will again move into a vertical position and compact the drawer contents, and further pressure on the drawer handle will move the drawer into closed position where the flange 87 again engages the strike 90 and secures the drawer against inadvertent withdrawal.

Although applicant has shown and described only one form of his invention, it will be apparent that variations of the structure may be made and are contemplated insofar as they are within the spirit and scope of the invention as set out in the annexed claims.

Having thus set forth my invention, what I claim as new and for which I desire protection by Letters Patent is:

1. In a filing cabinet, a slidable open front drawer, a head for closing the front of said drawer, means mounting said head for slidable movement in the direction of the drawer length, latch means securing said head in abutment with the front of said drawer, further latch means securing said drawer in said cabinet, and other means operatively associated with said latch means and said further latch means in a manner to effect successive release actuation operation thereof.

2. In a filing cabinet, a slidable open front drawer, a head for closing the front of said drawer, means mounting said head for slidable movement in the direction of the drawer length, latch means securing said head in abutment with the front of said drawer, further latch means securing said drawer in said cabinet, a control member on said head, and means operatively connecting said control member with said latch means and said further latch means, said control member being operable to move both of said latch means into released position.

3. In a filing cabinet, a slidable open front drawer, a head for closing the front of said drawer, means mounting said head for slidable movement in the direction of the drawer length, stop means for determining the limit of extension of said head with respect to said drawer, latch means securing said head in abutment with the front of said drawer, further latch means securing said drawer in said cabinet, and a control member so associated with said latch means and said further latch means as to render the latter inoperative to release said head prior to release operation of the former.

4. In a filing cabinet, a slidable open front drawer, a head for closing the front of said drawer, means mounting said head for slidable movement in the direction of the drawer length, latch means securing said head in abutment with the front of said drawer, further latch means securing said drawer in said cabinet, a control member mounted on the outer face of said drawer head, and other means operatively connecting said member with said latch means and said further latch means, said other means being operable by said member to sequentially release said further latch means and said latch means.

5. In a filing cabinet, a slidable open front drawer, a head for closing the front of said drawer, a front record compacting board operatively associated with said drawer and said front, stop means for limiting relative movement of said head and said drawer and to determine one operative position of said compacting board, latch means securing said head in abutment with said drawer, further latch means securing said drawer in said cabinet, and a control member associated with and operable to release both of said latch means.

6. In a filing cabinet, a slidable open front drawer, a slidable head for said drawer mounted to move in the direction of the drawer length, a record compacting board pivotally mounted on the base wall of said drawer and connected at its upper end with said head and being operable to become tilted when said front is extended with respect to said drawer, stop means for determin-

ing the extended position of said head and the tilted position of said board, latch means securing said head in abutment with said drawer and said board in upright position, further latch means securing said drawer in said cabinet, and a control member associated with and operable to release both of said latch means.

7. In a filing cabinet, a slidable open front drawer, a slidable head for said drawer mounted to move in the direction of the drawer length, a record compacting board pivotally mounted on the base wall of said drawer and connected at its upper end with said head and being operable to become tilted when said front is extended with respect to said drawer, stop means for determining the extended position of said head and the tilted position of said board, latches mounted in and extending beyond the forward edges of the sides of said drawer, adjustable means in said head engaged by said latches to secure said head in abutment with said drawer and said board in an upright position, latch means securing said drawer in said cabinet, and a control member connected with said latch means and said adjustable means in a manner to enable successive release of said latch means and said latches.

8. In a filing cabinet, a slidable open front drawer, a slidable head for said drawer mounted to move in the direction of the drawer length, a record compacting board pivotally mounted on the base wall of said drawer and connected at its upper end with said head and being operable to become tilted when said front is extended with respect to said drawer, stop means for determining the extended position of said head and the tilted position of said board, latch means carried by the sides of said drawer engaged with said front and disposing said board in an upright position, a latch carried by said head engaged with said cabinet, a control member mounted on the outer face of said drawer head, linkage connecting said control member with said latch means and said latch, said linkage including parts operable to require the successive releasing operation of said latch and said latch means when withdrawing said drawer from said cabinet.

HENRY C. FOSBERG.

REFERENCES CITED

The following references are of record in the file of this patent:

UNITED STATES PATENTS

Number	Name	Date
2,202,088	Clark	May 28, 1940
2,330,318	Straubel	Sept. 28, 1943
2,379,157	Jones	June 26, 1945