United States Patent [19]

Powers

[11] **3,899,993**

[45] **Aug. 19, 1975**

[54] **TOW BAR ASSEMBLY FOR WATER-SKI TOWING DEVICE**

[76] Inventor: **Richard T. Powers,** 3623 Herschel Ave., Cincinnati, Ohio 45208

[22] Filed: **Oct. 12, 1973**

[21] Appl. No.: **405,896**

[52] **U.S. Cl.** **115/6.1**

[51] **Int. Cl.**[2] **B63B 21/56**

[58] **Field of Search** ..... 115/6.1, 70, 18 E; 9/310 R; 114/235 R, 235 WS; 192/40; 123/103 E, 198 DB

[56] **References Cited**

UNITED STATES PATENTS

2,853,166	9/1958	Campbell	192/40
2,914,018	11/1959	Schachner et al.	115/6.1
2,969,037	1/1961	Vogt	115/70
3,062,172	11/1962	Moore	115/6.1
3,181,493	5/1965	Pericut	115/6.1
3,711,755	1/1973	Meyer, Jr.	115/18 E

Primary Examiner—Trygve M. Blix
Assistant Examiner—Stuart M. Goldstein
Attorney, Agent, or Firm—Irwin P. Garfinkle; Gary M. Gron

[57] **ABSTRACT**

A water-ski towing device comprising a bouyant hull and a propulsion unit mounted in it. A tow bar extends aft from the transom of the hull for towing a water skier. A compact adjustable mechanism pivotally secures the tow bar to the bouyant hull. The mechanism has a detent to releasably latch the tow bar in an elevated position for operation of the device. An adjustment knob is provided for varying the position of the tow bar in its latched position to accommodate different skier heights or different applications for the device. The tow bar has a pair of hand grips oriented to provide the most comfortable position for an operator's hands and at the same time offer optimum mechanical advantage in steering the vehicle. A throttle and clutch control in the hand grips are finger actuated to improve operator control of the device.

15 Claims, 6 Drawing Figures

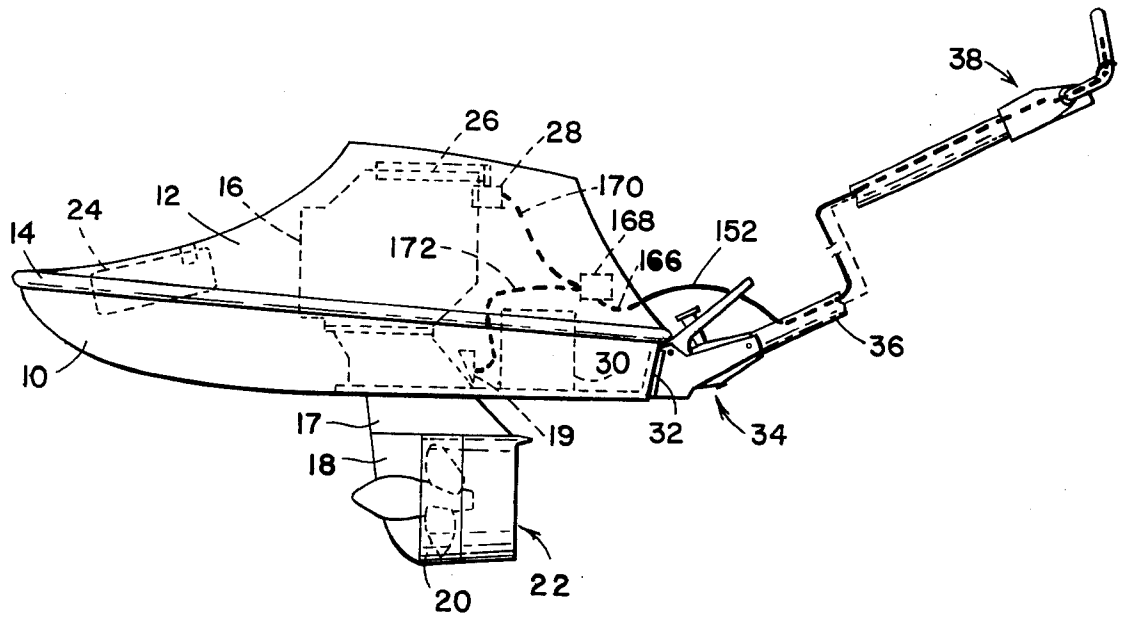

Fig 1

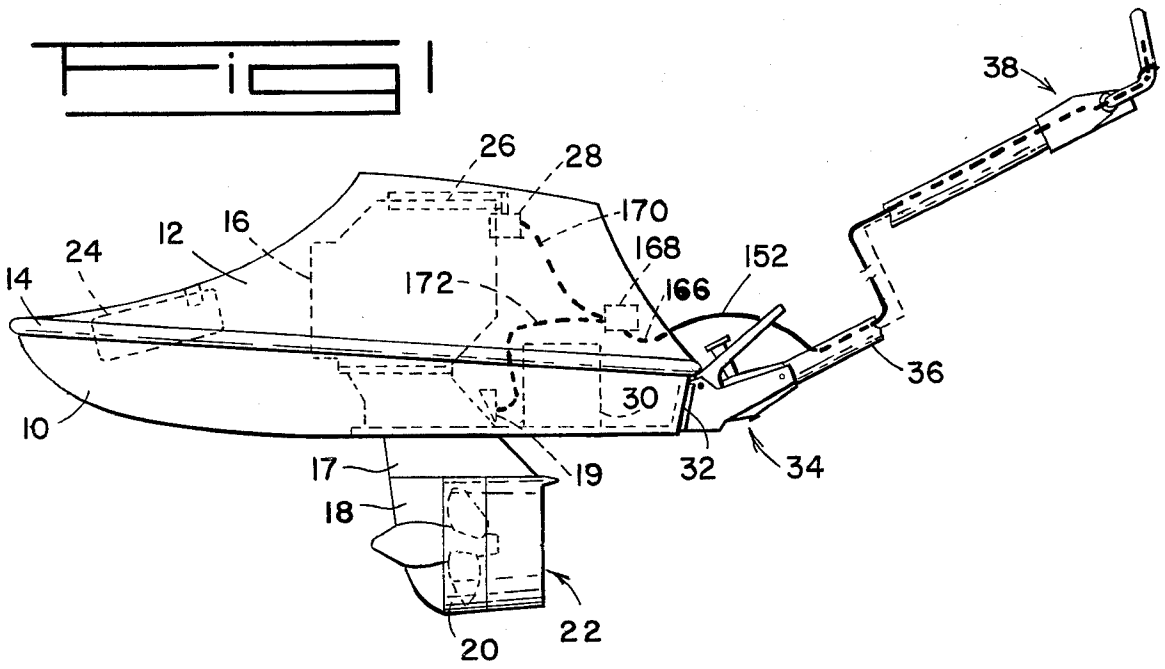
38
26
28
170
168
152
166
172
16
12
24
14
36
30
10
17
19
32
34
18
22
20

Fig 2

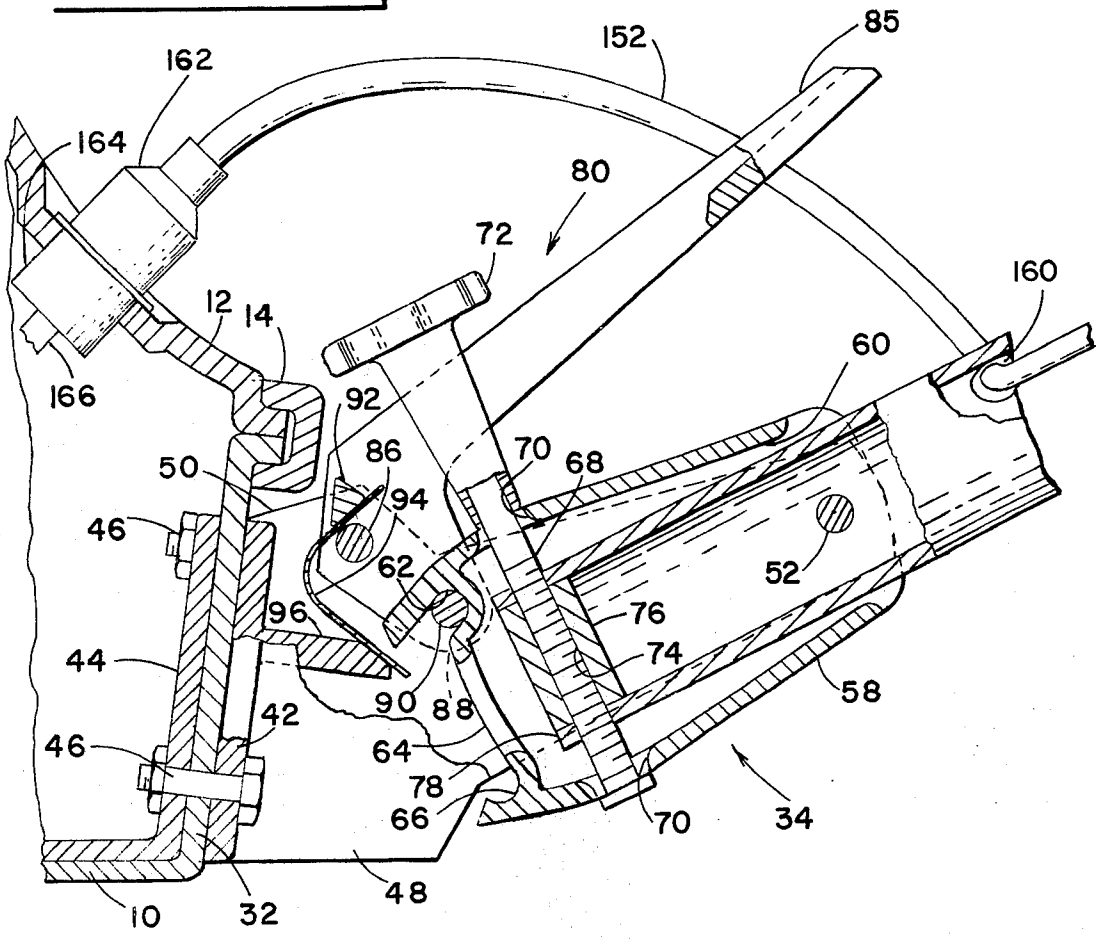
152
85
162
164
80
72
160
12
14
60
166
92
86
70
68
50
94
46
62
52
96
76
74
44
90
88
58
42
46
64
78
66
70
34
48
10
32

FIG 3

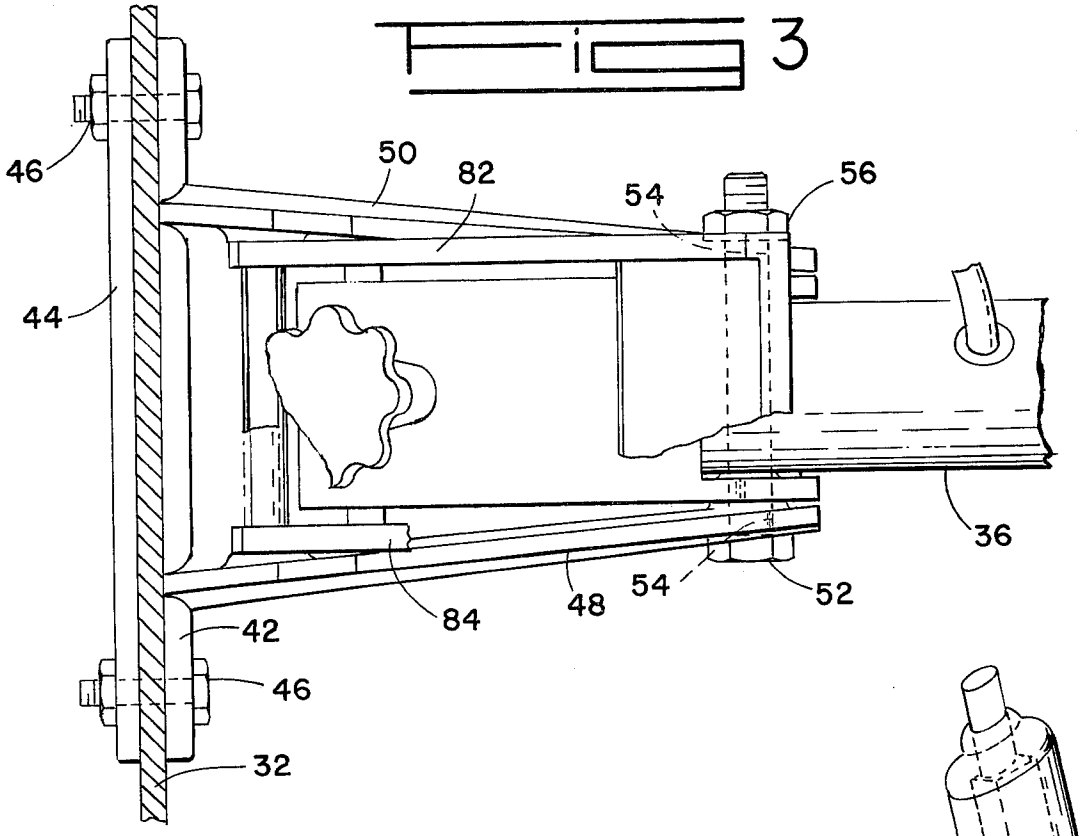
46
50
82
54
56
44
36
54
52
48
84
42
46
32

FIG 4

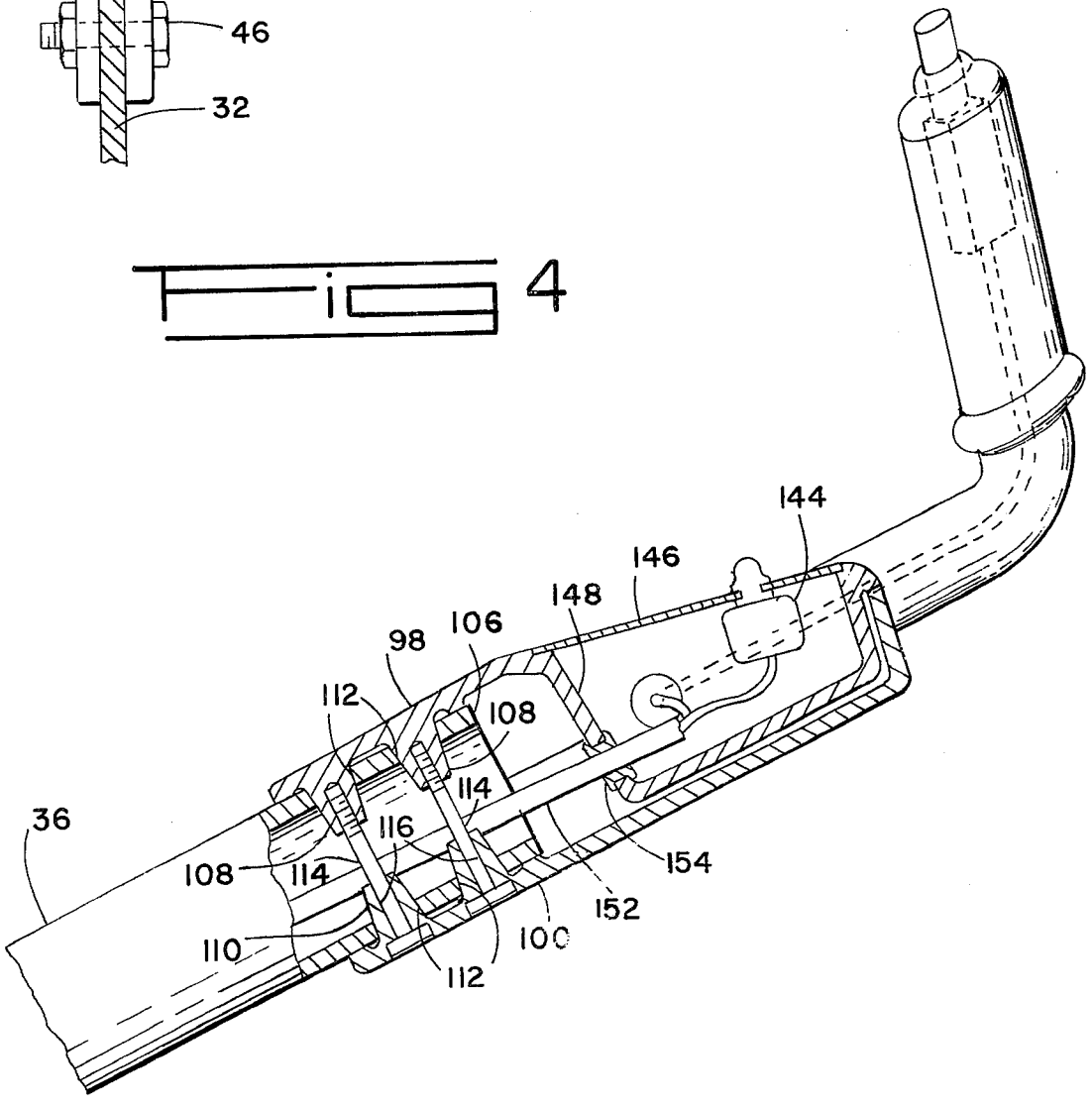
144
146
148
106
98
112
108
114
36
116
108
114
154
152
110
100
112

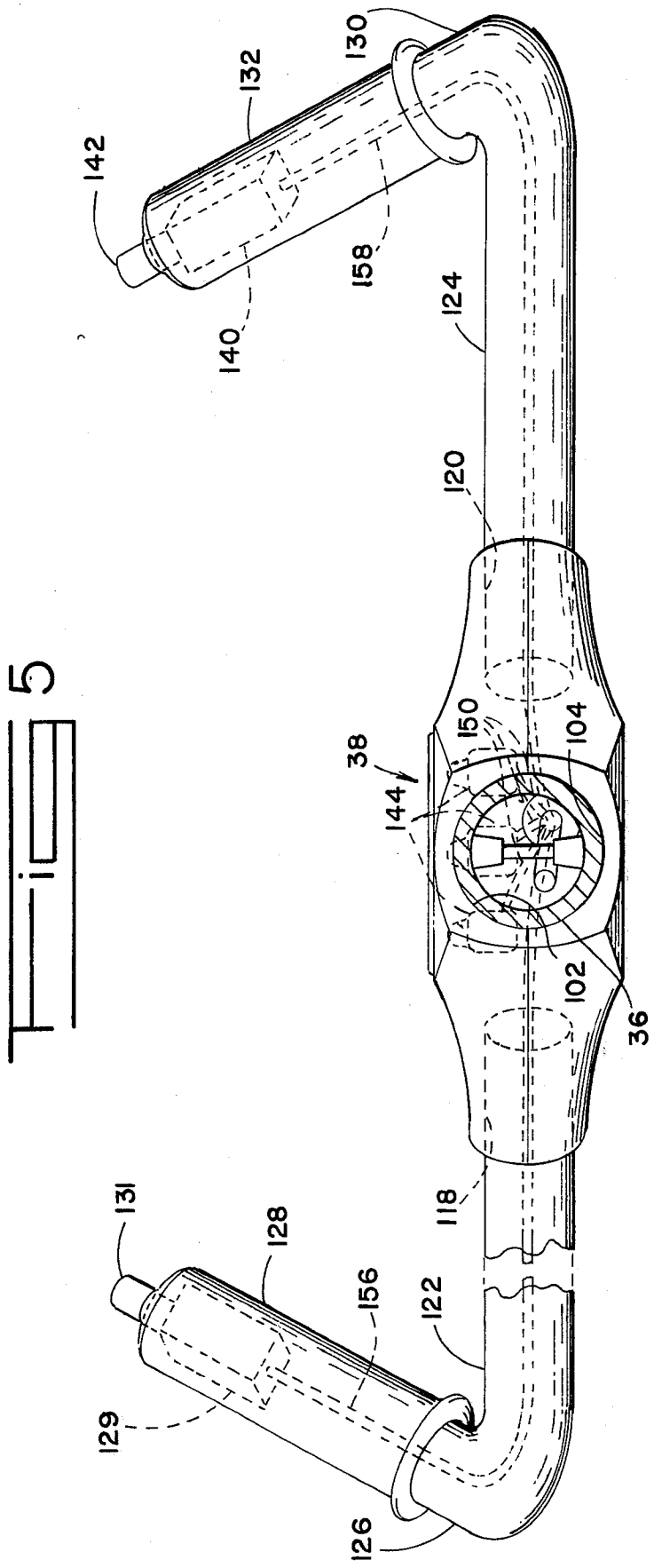
130
132
142
158
140
124
120
150
104
38
144
102
36
118
131
128
156
122
129
126

Fig. 5

Fig 6

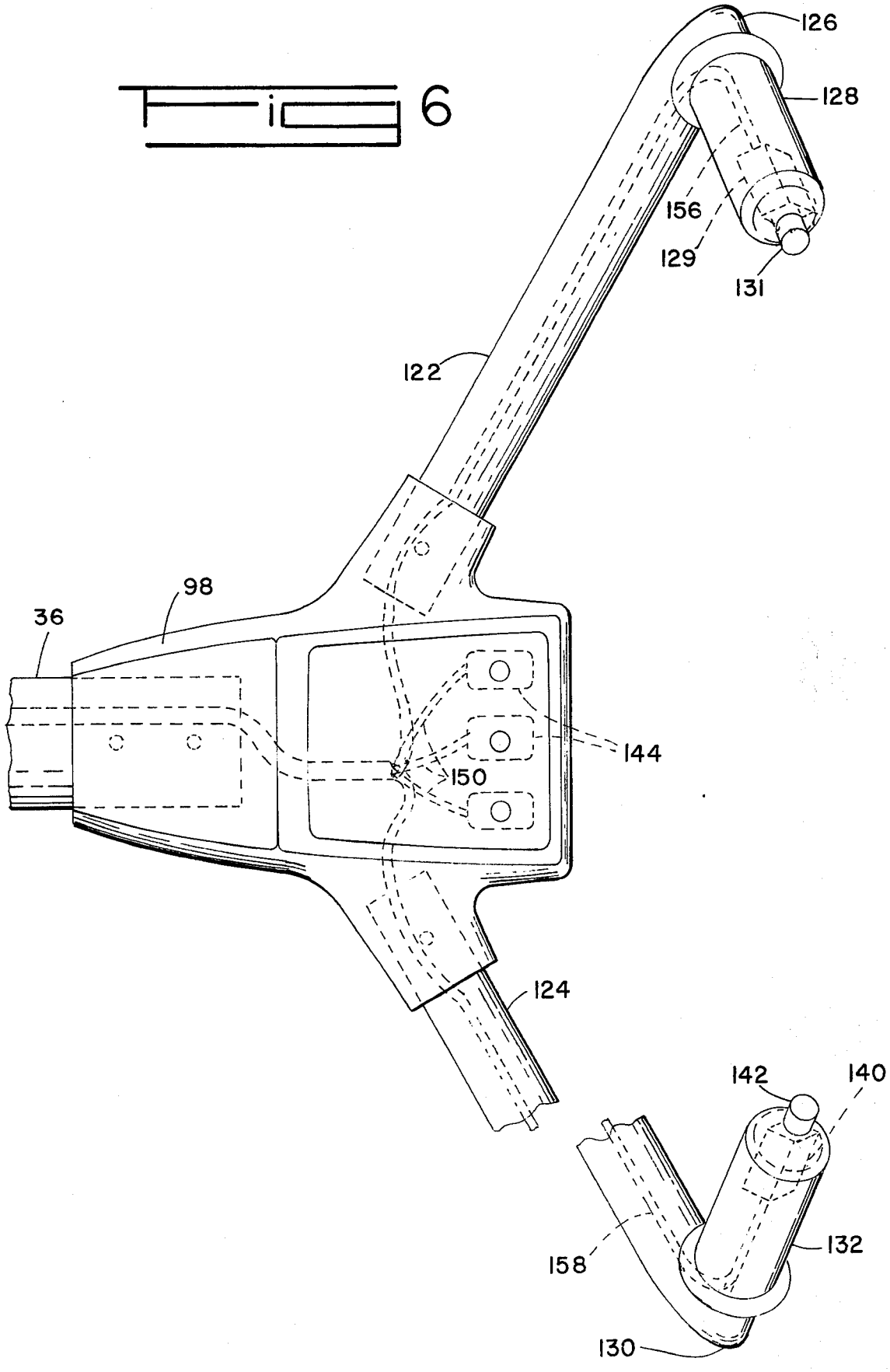

TOW BAR ASSEMBLY FOR WATER-SKI TOWING DEVICE

The present invention relates to water-ski towing devices and more particularly to improvements in tow bars for these types of devices.

In recent years it has been proposed to provide a small bouyant hull with a marine propulsion unit in it and a tow bar extending from the aft end of the hull to a hand grip for towing a water skier. In a number of prior art devices (see U.S. Pat. Nos. 2,914,018 and 3,181,493) it has been proposed to mount the tow bar for free movement in a vertical plane only. This is intended to compensate for the fact that the skier starts out in the water and as the device picks up speed comes out of the water to an elevated planing position. In practice, however, it has proved to be difficult if not impossible to properly operate the water-ski hull, particularly from the standpoint of directional control.

In one instance it has been proposed to permit the handle to swing upward until it reaches a particular elevated position where it is latched in place to function as a fixed element. This greatly enhances the directional control while at the same time permitting the skier to properly ascent to the planing position. One of the problems with this type of device is that the latching mechanism tends to be cumbersome and makes adjustment for individual skier heights relatively difficult.

An additional problem encountered with prior art devices is that the tow bar hand grips are oriented in such a way that they place the skier's hands in uncomfortable positions. Typically, these hand grips are in the form of a T-bar which strains the arm muscles and promotes early fatigue. In addition, the engine controls in these devices are hand grip types that make it extremely difficult to slow the unit down without losing one's grip and falling off. Some of the above problems are solved in accordance with one aspect of the present invention by a water-ski towing device comprising a buoyant hull incorporating a propulsion unit and a tow bar extending in aft direction for operator control. The unit has an adjustable mechanism for mounting the tow bar. The mechanism includes a mounting plate having a base secured to the transom of the hull and a pair of side plates extending aft from the base plate. A shaft extends between the side plates for pivotally mounting the tow bar. An adjustable latching means is positioned substantially between the end plates and releasably latches the tow bar in a predetermined elevated position.

In another aspect of the present invention the above problems are solved by a water-ski towing device comprising a buoyant hull having a propulsion unit and an aft extending tow bar. A handle assembly is secured to the free end of the tow bar and has a pair of hand grips extending substantially vertically upward, as viewed from the side of said device, and angled inward as viewed from a fore and aft direction.

The above and other related features of the present invention will be apparent from a reading of the following description of the disclosure shown in the accompanying drawing and the novelty thereof pointed out in the appended claims.

In the drawings:

FIG. 1 is a simplified external view of a water-ski towing device embodying the tow bar assembly of the present invention; and

FIG. 2 is an enlarged fragmentary sectional view of the water-ski towing device of FIG. 1, particularly illustrating an adjustable latching mechanism for the tow bar assembly;

FIG. 3 is a plan view of the adjustable latching mechanism of FIG. 2;

FIG. 4 is a greatly enlarged view of the handle assembly for the tow bar assembly of FIG. 1; and

FIG. 5 is an end view of the handle assembly as seen from the rear; and

FIG. 6 is a plan view of the handle assembly of FIGS. 4 and 5.

Referring to FIG. 1, there is shown a water-ski towing device comprising a buoyant hull **10** and an upper housing **12** secured at a belt line **14.** An engine **16** is mounted within hull **10.** As illustrated, the engine is of the outboard type in which the engine output shaft (not shown) is positioned vertically and extends downward through the hull inside of an airfoil strut **17** and into a propeller support housing **18.** Housing **18** contains a right angle drive and clutch unit (not shown) that is actuated by a solenoid **19** to connect the engine to a propeller **20.** Propeller **20** may be contained within a shroud assembly **22** embodying the features of copending application Ser. No. 403,440, filed on Oct. 4, 1973, and entitled "Propulsion Unit for Water-Ski Towing Device", M. Uroshevich and P. March co-inventors.

Engine **16** is supplied with fuel from a fuel tank **24** and has a ring **26** that is rotated by an electric motor **28** to vary the throttle opening and spark advance for the engine. A battery **30** supplies electrical power for the engine ignition and other control functions, as described later.

One form of marine engine and propulsion has been shown in connection with the description of the present invention. It should be understood that it is for illustrative purposes only and that many other types of engines and propulsion units may be incorporated in the water-ski towing device. The hull **10** has a stern **32** that mounts an adjustable latching mechanism **34** supporting an aft extending tow bar **36** in the form of a tube. Tow bar **36** has a water-skier manipulated handle assembly **38** at its remote end.

Referring to FIGS. **2** and **3** particularly, the adjustable latching mechanism **34** comprises a U-shaped bracket compressed of a base plate **42** secured through the transom **32** of the boat to an internal mounting plate **44** by bolt assemblies **46.** Base plate **42** has integral side plates **48** and **50** extending aft.

A shaft **52** in the form of a bolt extends through holes **54** in the side plates **48** and **50** and through the lower end of tow bar **36** for pivotally mounting it to the plates **48** and **50.** A nut **56** permits the bolt **52** to be withdrawn from the plates **48** and **50,** thereby enabling removal of the tow bar from the hull for storage or transport.

The shaft **52** also pivotally mounts a housing **58** having a socket **60** for receiving the lower end **78** of tow bar **36.** Housing **34** at its end away from the pivotal mounting of shaft **52** has a first recess **62** which forms a detent. Recess **62** connects through a smooth cam surface **64** to an additional recess **66** forming a stop for the mechanism. A threaded shaft **68** extends through openings **70** in opposite walls of housing **58** and has a hand-manipulated knob **72** nonrotatably secured to it. Threaded shaft **68** is received in internal threads **74** of a plug **76** positioned in the lower end **78** of tow bar **36.**

A latch mechanism **80** comprises a pair of levers **82** and **84** secured to each other through an integral hand plate **85.** Levers **82** and **84** are pivotally mounted to plates **50** and **48,** respectively, by pins **86.** Levers **82** and **84** have arm sections **88.** A bar **90** extends between the free ends of arms **88** and is adapted to be received in recess **62** as a detent or in recess **66** to limit downward pivoting movement. A bar **92** is integral with and extends between levers **82** and **84.** A leaf spring **94** mounted on bar **92** acts on a ledge **96** protruding from end plate **42** to bias latch mechanism in a counterclockwise direction about pins **86** as viewed in FIG. **2.**

FIGS. **4, 5** and **6** show the handle assembly **38** for the tow bar **36.** Handle assembly **38** includes a web comprising upper and lower housings **98** and **100,** respectively, having complimentary recesses for receiving the upper end **106** of the tow bar **36.** The recesses have inward protruding conical bosses **108** and **110,** respectively, received in holes **112** in tow bar **36.** Screws **114** extend through openings **116** in the lower housing **100** and are threaded into the conical bosses **108** in the upper housing **98.** The central web housing **98** and **100** have additional sockets **118** and **120** which receive tubes **122** and **124,** respectively. Pins (not shown) in the sockets **118** and **120** orient the tubes in a particular position. Tube **122** has a hand grip section **126** bent upward in a predetermined relationship, as described later. Hand grip section **126** has a suitable hand grip cover **128.** Tube **124** has a hand grip section **130** which is positioned in symmetry with the angle of hand grip section **126.** Hand grip section **130** has a suitable cover **132.**

Hand grip section **126** has positioned in it a throttle-actuated control device **129** having a thumb-actuated plunger **131.** In one form the element **129** is a linear potentiometer and the pin **132** is depressed into the handle to vary the resistance of the potentiometer. In another form device **140** may be a switch to pulse an engine control system. Hand grip section **130** includes a switch **140** having a thumb-actuated plunger **142.** Additional switches **144** may be mounted in a plate **146** extending across a recess **148** formed in the upper and lower web housings **98** and **100.** Lines **150** extend from switches **144** to a wiring harness cable assembly **152** which extends through a sealed opening **154** in recess **148** to the interior of tow bar **136.** Lines **156** and **158** respectively connect devices **129** and **140** to the wiring harness **152.**

Wiring harness **152** extends to a point adjacent the lower end of tow bar **36** and out through an opening **160.** Harness **152** terminates in a female plug connector **162** interconnecting with a male plug connector **164** molded into the cover **12.** A cable assembly **166** extends from connector **164** to an electronic control system **168** (see FIG. **1**). From here a line **170** extends to d.c. motor **28** and a line **172** extends to solenoid **19.**

As illustrated, element **129** is a linear potentiometer which drives an electronic throttle positioning servo-system to drive the d.c. motor **28** in one direction or another to vary the throttle opening and hence the speed of the engine. Linear potentiometer **129** is biased so that the plunger **131** is fully extended and the throttle ring **26** is in an idle position when there is no pressure on plunger **131.** Switch **140** is actuated by depressing plunger **142** to energize solenoid **19** and connect the motor output shaft to the propeller **20** only when the plunger **142** is depressed. The plunger **142** is suitably biased so that in the absence of a pressure on the hand grip the solenoid will not be energized. The remaining switches **144** may be used to provide additional engine controls, such as start, choke and other functions as needed.

As observed in FIG. **4** in which the handle assembly is viewed from the side of the water-ski towing device, the hand grip sections **126** and **130** extend substantially vertically upward when the tow bar is in its elevated latched position. As viewed in FIG. **5,** i.e., fore and aft direction, the hand grip sections **126** and **130** are angled inward at an acute angle with respect to the vertical. It has been found that an angle of approximately 27° gives particularly acceptable control.

For operation of the water-ski towing device of FIG. **1** the hand plate **85** is depressed to pivot bar **90** out of recess detent **62** and permit the tow bar **36** to swing downward where its position is limited by the stop **66.** In this position the operator can start the water-ski towing using the switches **144** in the web of the handle assembly **38.** When the engine is operating the clutch switch **140** is depressed with the thumb of the left hand to interconnect the engine with the propeller **20** and the plunger **142** depressed to open the throttle on the engine and cause the unit to move forward in the water. As the unit gains speed the operator comes up out of the water and begins to plane on his skis. As this happens the tow bar **36** pivots up from its horizontal position to the elevated position shown in FIGS. **1** and **2.** At this point, bar **90** snaps into detent **62** by leaf spring **94** and is held in place to secure the tow bar **36** at a preselected elevated position. In this position the tow bar **36** acts as an essentially rigid element for precise and manageable control of the unit.

To adjust for the particular height of the skier with a high degree of precision, the knob **72** is rotated to thread shaft **68** relative to plug **76** and thus cause the lower end **78** of tow bar **36** to move up and down as viewed in FIG. **2.** This in turn varied the height of the elevated end of bow bar **36.** The above adjustment is made very simply and enables a wide range and very precise selection of the particular height desired.

The position of the hand grips **128** and **132** enables a high degree of control, while at the same time minimizing operator fatigue. This is because the arm muscles are placed in the most natural position for comfortable and prolonged pulling. By separating the holding function and the controlling function, which is done with the thumbs, the possibility of losing one's grip with the remaining fingers when a skier purposefully slows down is minimized if not eliminated. When a skier falls off of the unit the propeller is automatically declutched and the throttle returned to an idle position for safety. To remount, the water skier simply depressed hand plate **85** to place the tow bar **36** in its lower position. The skier is then able to engage the clutch and depress the plunger **142** to open the throttle and again ski.

When the skier is finished the tow bar **36** assembly and the housing **58** can be removed from the mounting plate by undoing nut **56** and pulling out shaft **52.** The connector **162** provides a quick disconnect of the wire harness **152** from the cover **12.** In this way the overall dimensions of the water-ski towing device are minimized for storage and transport.

The latching mechanism described above is highly compact and fits substantially within the end plates attached to the hull. This minimizes extraneous struts and

elements which can get in the skier's way or be damaged. The hand grip assembly enables very precise control of the units using the thumbs and at the same time offers a comfortable position for prolonged skiing activities.

While the preferred embodiment of the present invention has been described, it should be apparent to those skilled in the art that it may be employed in other forms without departing from its spirit and scope.

Having thus described the invention, what is claimed as novel and desired to be secured by Letters Patent of the United States is:

1. A water-ski towing device comprising:
a buoyant hull having a motor and a propeller assembly driven by said motor to provide a propulsive thrust;
a tow bar extending aft for towing a water skier; and
connecting means for connecting said tow bar to said hull, said connecting means providing a rigid connection in a first position between said tow bar and said hull during normal operation of said device, and being pivotal upwardly in a vertical plane from a second position to said first position during initial operation of said device, said connecting means comprising:
mounting means secured to said hull
the lower end of said tow bar being pivotally mounted on said mounting means for movement in said vertical plane; and
latching means for releasably latching said tow bar in said first position.

2. A water-ski towing device in claim 1 wherein said mounting means secured to said hull comprises a forked plate including a base plate and a pair of spaced side plates projecting from said base plate and a shaft extending between the free ends of said side plates, said tow bar being pivotally mounted on said shaft;
and wherein said latching means is contained substantially between said side plates and comprises:
a latching element adjustably secured to said tow bar and positioned between said side plates, said latching element having a latching detent and a positive stop angularly spaced therefrom;
a lever pivotable in a vertical plane from said base plate; and
a latch including a rod mounted onto said lever and yieldably biased into said detent thereby releasably holding said tow bar in said first position, said rod being releasable from said detent when said lever is pivoted to permit the pivoting of said tow bar to said second position at said positive stop.

3. A water-ski towing device as in claim 2 wherein said shaft is releasably secured between said side plates for permitting removal of said tow bar and said latching element.

4. A water-ski towing device as in claim 2 wherein said lever comprises:
a pair of L-shaped arms pivotally mounted at the apex thereof to said side plates and having an operator pad extending between them at an end spaced from said pivotal mounting, said rod extending between the other end of said arms so that pivotal movement thereof swings said rod into and out of said detent; and
a spring yieldably urging said rod into said detent.

5. A water-ski towing device as in claim 4 wherein said L-shaped arms have a bar extending between them and said spring comprises a leaf spring secured to said bar and acting against said base plate to urge said rod into said detent.

6. A water-ski towing device as in claim 1 further comprising adjusting means for adjusting the location of the first position of said tow bar in said vertical plane.

7. A water-ski towing device as in claim 6 wherein said mounting means includes a shaft, said tow bar being pivotal on said shaft, and wherein said adjusting means for adjusting the location of the first position of said tow bar comprises:
an adjustment element positioned between the side walls of said forked plate and pivotally mounted to said shaft, said adjustment element having a recess into which said tow bar extends so that both said tow bar and said adjustment element pivot about said shaft; and
means connected between said element and the lower end of said tow bar for adjustably displacing said adjustment element and the lower end of said tow bar relative to one another, the latching means being formed on said element whereby the location of said tow bar may be adjustably positioned in said first position.

8. A water-ski towing device as in claim 7 wherein said means connected between said element and the lower end of said tow bar comprises:
a threaded shaft extending through said adjustment element and rotatable relative to said adjustment element; and
an internally threaded plug secured to the lower end of said tow bar and receiving said threaded shaft whereby rotation of said threaded shaft pivots the lower end of said tow bar relative to said adjustment element.

9. A water-ski towing device as in claim 8 wherein said mounting means secured to said hull comprises a forked plate including a base plate and a pair of spaced side plates projecting said base plate, said shaft extending between the free ends of said side plates, and wherein said latching means comprises:
a detent formed in the end of said element away from said shaft;
a pair of levers pivotally secured to said side plates, said levers having arms extending away from said pivotal mounting and a rod positioned between them so that pivoting movement of said levers swings said rod into and out of said detent; and
a spring yieldably biasing said rod into said detent.

10. A water-ski towing device as in claim 9 wherein said element has a stop against which said rod abuts to limit the downward movement of said tow bar.

11. A water-ski towing device as in claim 10 wherein said shaft is releasably secured between said side plates for permitting removal of said tow bar and said adjustable positioning element.

12. A water-ski towing device as in claim 11 further comprising:
a handle assembly positioned in the upper end of the tow bar away from the hull;
electrically energized actuation devices for said engine positioned within said hull;
switches positioned in said handle assembly; and
means for electrically connecting said switches with said actuation devices, said electrical connecting means including a releasable connector at the sur-

face of said hull for permitting complete removal of said tow bar.

13. A water-ski towing device as in claim **1** further comprising a handle assembly positioned at the end of said tow bar away from said hull, said handle assembly including upwardly extending hand grips oriented substantially vertically as viewed from the side of said device and angled inward as viewed in a fore and aft direction when said tow bar is in said first position.

14. A water-ski towing device comprising:

a buoyant hull having a motor and a propeller assembly driven by said motor to provide a propulsive thrust;

an elongated aft extending tubular tow bar secured to said buoyant hull;

a handle assembly secured to the remote end of said tow bar, said handle assembly comprising a central web housing connected to said tow bar and having sockets, said web housing containing a plurality of electric controls for said motor, a pair of upwardly extending tubular hand grips received in said sockets and oriented relative to said tow bar to extend substantially vertically as viewed from the side of the device and extend inward at an acute angle relative to the vertical as viewed in a fore and aft direction when the tow bar is in an operative position, said hand grips having a first portion received in said sockets and extending aft and outward from said web and an integral hand grip portion extending upward when said tow bar is in said operative position, said web housing having a pin extending into said sockets for positioning said hand grips;

remote controls for said motor, said controls including thumb-actuated devices positioned in said hand grips, said thumb-actuated devices being biased to permit operation of said motor and thereby movement of said hull only when they are engaged by an operator, and thereby stopping motion of said hull when an operator releases his grip from the handle;

a wiring harness for connecting said electrical controls and thumb-actuated devices with said motor, said wiring harness extending upward through said tow bar into said central web housing and having electric wires for connecting with said electrical controls and for connecting with said thumb-actuated devices;

means for releasably detaching said tow bar from said hull, said means comprising a base plate secured to said hull and a pair of side plates projecting from said base plate, a releasably secured shaft extending between the free ends of said side plates, said tow bar being pivotally mounted on said shaft for movement in a vertical plane, and means contained substantially between said side plates for releasably latching said tow bar in a predetermined elevated skiing position; and

a releasable electrical connector in said wiring harness positioned in said hull for permitting removal of said tow bar and wiring harness.

15. A water-ski towing device as in claim **14** further comprising means for adjustably positioning said tow bar in a vertical plane in said skiing position.

* * * * *