US00D602001S

(12) United States Design Patent

Bentley

(10) Patent No.: US D602,001 S
(45) Date of Patent: ** Oct. 13, 2009

(54) **COMMUNICATIONS HEADSET**

(75) Inventor: **Matt Bentley**, Scotts Valley, CA (US)

(73) Assignee: **Plantronics, Inc.**, Santa Cruz

(**) Term: **14 Years**

(21) Appl. No.: **29/318,390**

(22) Filed: **May 19, 2008**

(51) **LOC (9) Cl.** **14-01**
(52) **U.S. Cl.** **D14/206**
(58) **Field of Classification Search** D14/205, D14/206, 223, 142, 156, 188, 192; D29/112; 2/209; 181/129, 130; 379/430, 431; 381/370, 381/371, 380, 381, 383; 455/575.1, 575.2
See application file for complete search history.

(56) **References Cited**

U.S. PATENT DOCUMENTS

D473,539 S * 4/2003 O'Leary D14/205
6,594,366 B1 * 7/2003 Adams 381/74
6,695,477 B1 * 2/2004 Nishiguchi et al. 381/74
D494,154 S * 8/2004 Polito D14/206
D530,307 S * 10/2006 Rath D14/206
D534,156 S * 12/2006 Obata D14/205
D535,285 S * 1/2007 Skulley D14/205
D539,267 S * 3/2007 Komiyama D14/205
D540,301 S * 4/2007 Obata D14/205
D540,303 S * 4/2007 Rausch et al. D14/205
D540,777 S * 4/2007 Rausch et al. D14/205
D541,256 S * 4/2007 Rausch et al. D14/205
D542,774 S * 5/2007 Rausch et al. D14/206

* cited by examiner

Primary Examiner—Paula Greene
(74) *Attorney, Agent, or Firm*—Michael D. Rodriguez

(57) **CLAIM**

The ornamental design for a communications headset, as shown and described.

DESCRIPTION

FIG. **1** is front view of a communications headset showing our new design;

FIG. **2** is a top view thereof;

FIG. **3** is a left view thereof; and,

FIG. **4** is a right side view thereof.

The broken lines form no part of the claimed design.

1 Claim, 2 Drawing Sheets

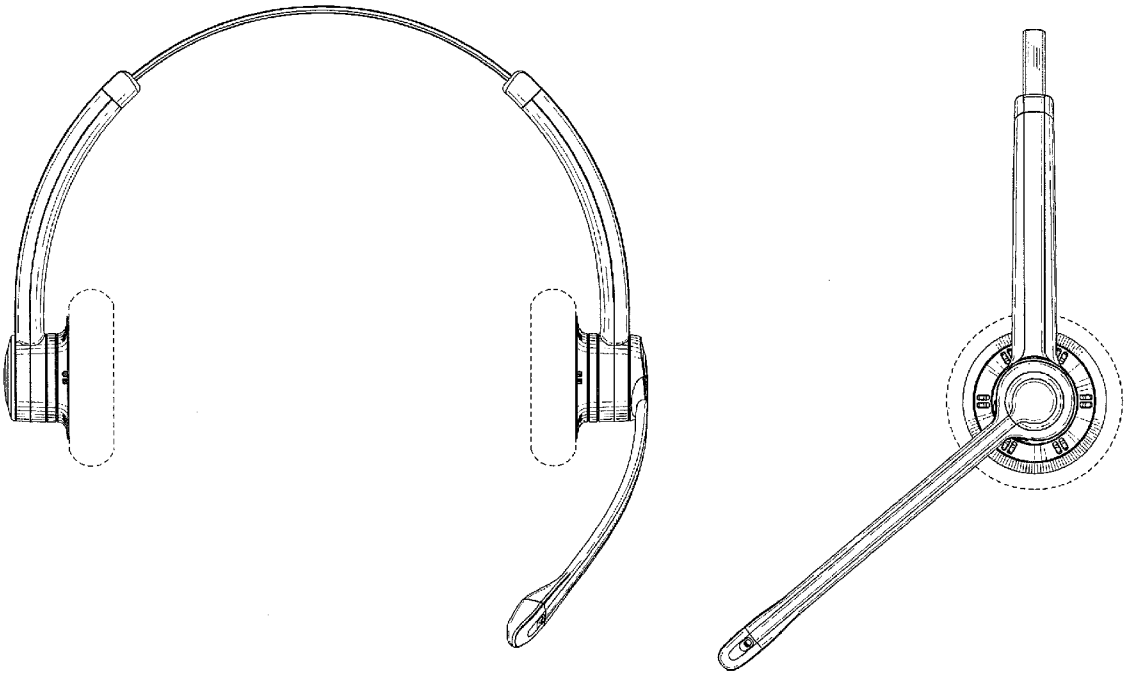

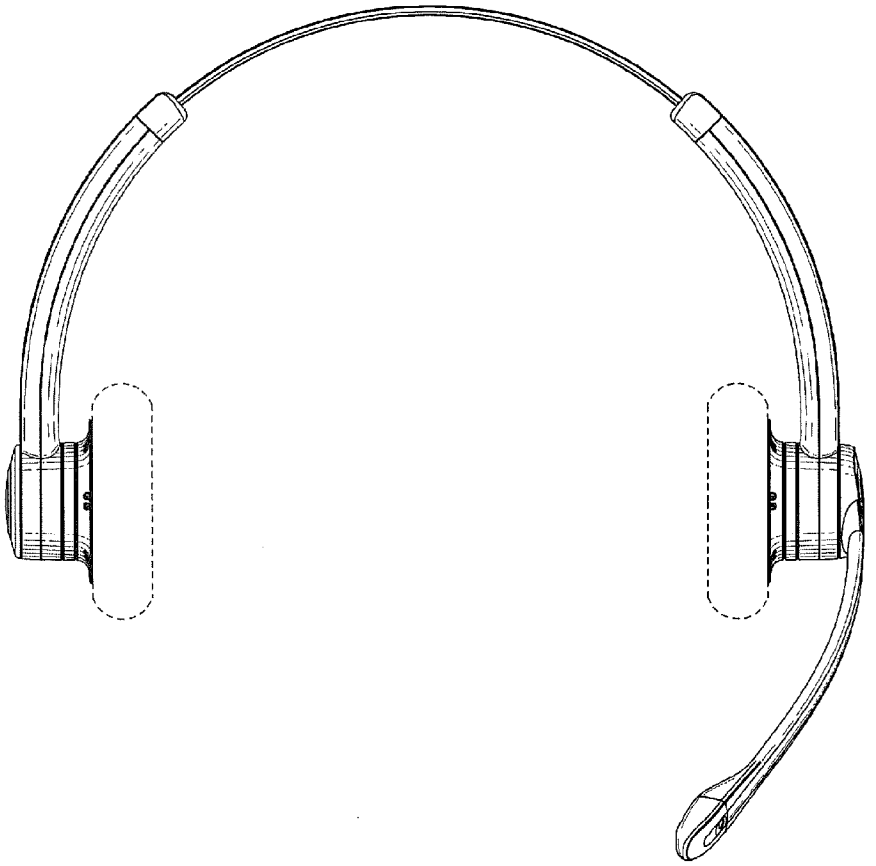

FIG. 1

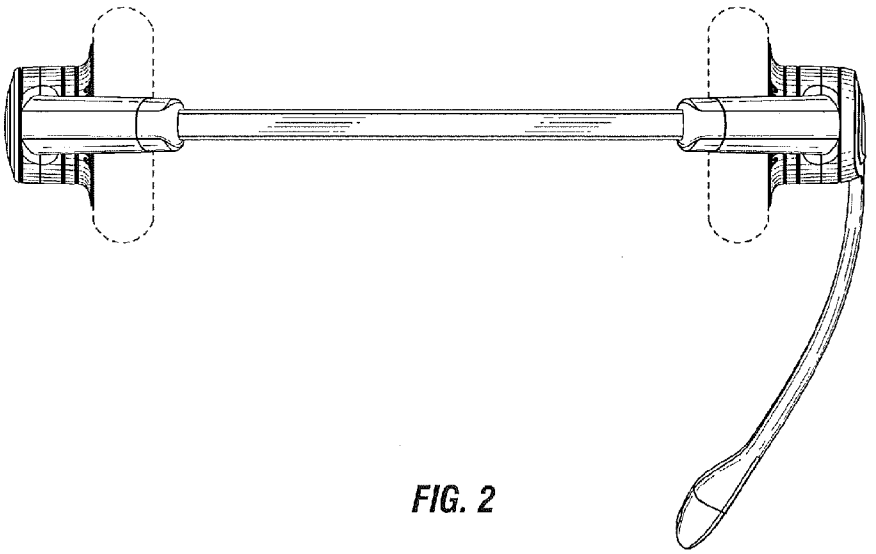

FIG. 2

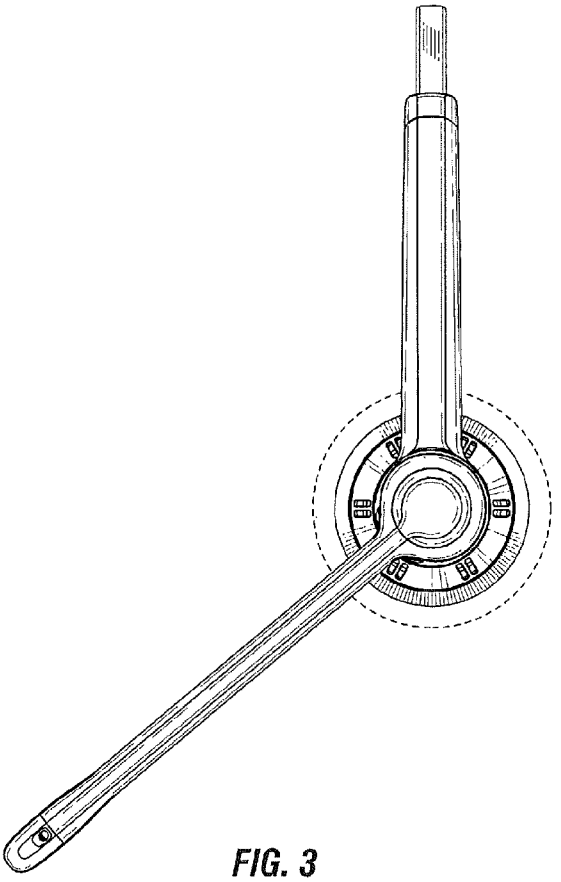

FIG. 3

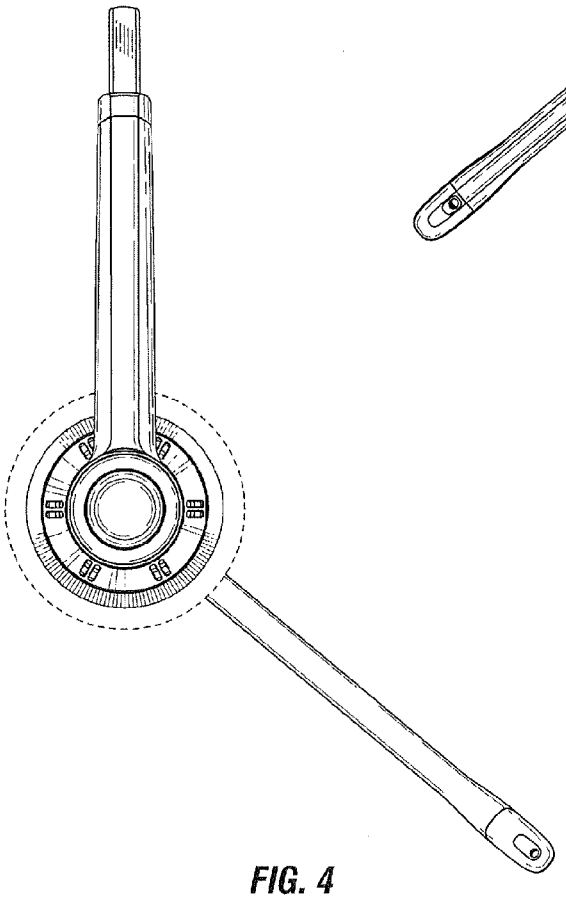

FIG. 4