Dec. 22, 1953 M. E. BUEHLER 2,663,863

MECHANICAL TIME COMPARATOR MECHANISM

Filed Dec. 27, 1951 2 Sheets-Sheet 1

Fig 1

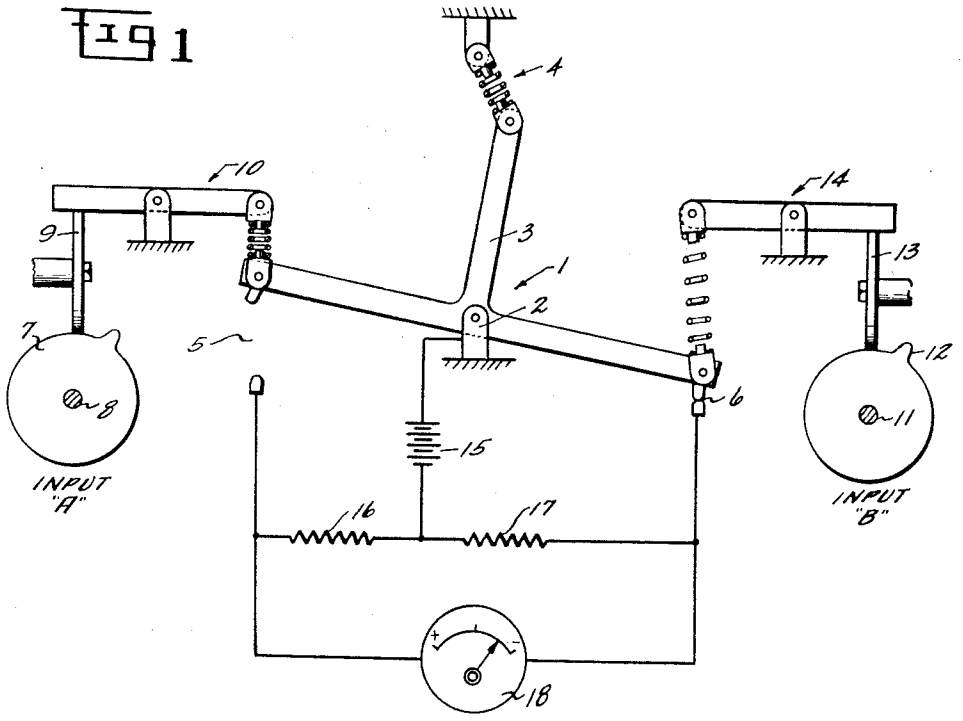


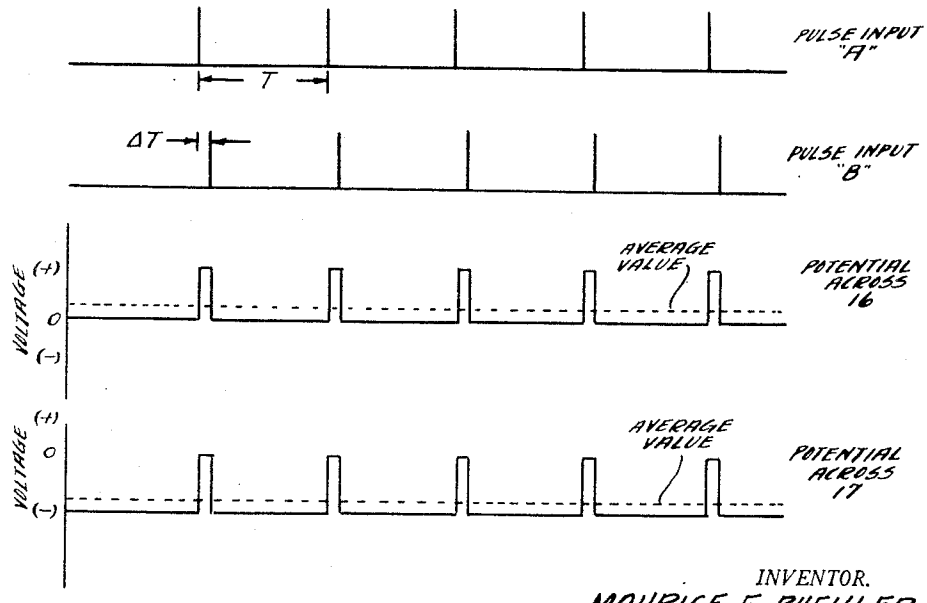


Fig 2

INVENTOR.
MAURICE E. BUEHLER
BY Theodore C. Wood
AGENT
Mark Koontz
ATTORNEY

Dec. 22, 1953 M. E. BUEHLER 2,663,863

MECHANICAL TIME COMPARATOR MECHANISM

Filed Dec. 27, 1951 2 Sheets-Sheet 2

Fig 3

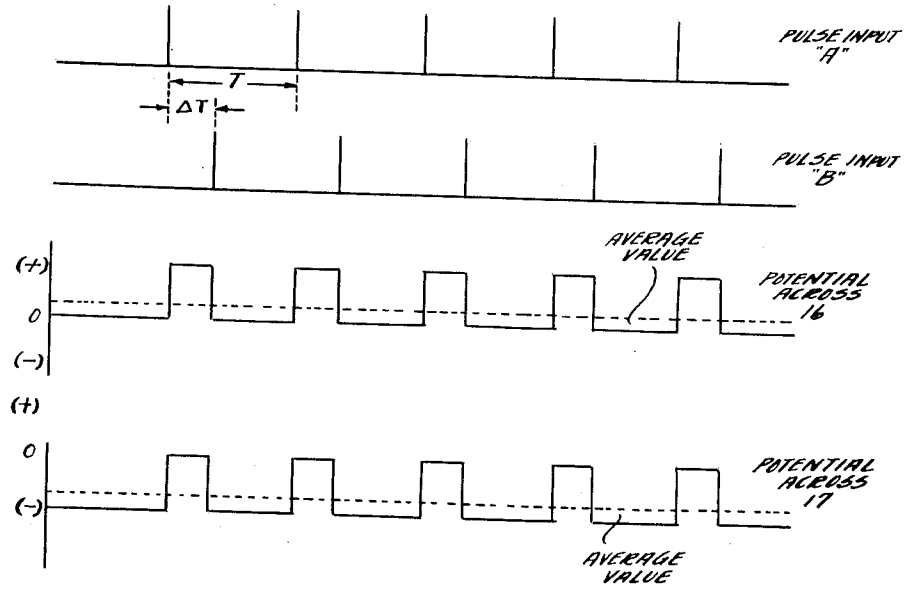


Fig 4

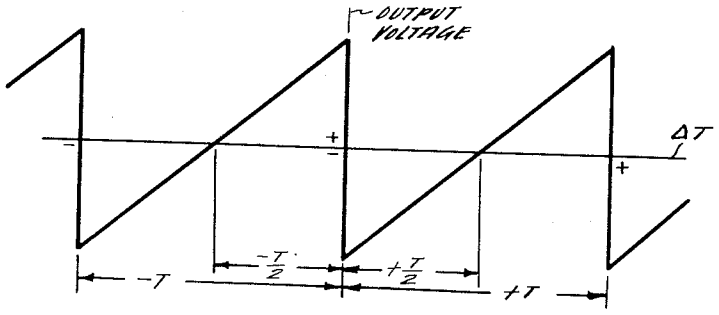


INVENTOR.
MAURICE E. BUEHLER.
BY Theodore C. Wood
AGENT—
Wade Hornett,
ATTORNEY—

Patented Dec. 22, 1953

2,663,863

# UNITED STATES PATENT OFFICE

2,663,863

## MECHANICAL TIME COMPARATOR MECHANISM

Maurice E. Buehler, San Diego, Calif.

Application December 27, 1951, Serial No. 263,679

4 Claims. (Cl. 340—268)

(Granted under Title 35, U. S. Code (1952), sec. 266)

1

The invention described herein may be manufactured and used by or for the Government for governmental purposes without payment to me of any royalty thereon.

This invention relates to a synchronism detector and more particularly to a synchronism detector wherein a voltage is produced whose polarity is a function of the sequence of two periodic phenomena and whose amplitude is a function of the time difference between the two periodic phenomena.

In the operation of many systems it is oftentimes desirable and even essential that periodic phenomena such as two rotating members, two electrical signals, etc., be kept in synchronism.

It is an object of this invention to provide a synchronism detector that will produce a large error signal in response to very small deviations in the timing of two periodic phenomena.

It is another object of this invention to provide a synchronism detector which will produce a signal whose polarity will be a function of the sequence of two periodic phenomena.

The above objects as well as other objects, features and advantages of this invention will be more clearly understood in view of the following description when taken in conjunction with the drawings wherein:

Fig. 1 is a schematic diagram of an embodiment of this invention as applied to detection of synchronism between two rotating members.

Figs. 2 and 3 are diagrams explaining the operation of the apparatus in Fig. 1.

Fig. 4 is the output voltage characteristic of the apparatus of Fig. 1.

Referring now to the drawings and more particularly to Fig. 1 thereof, a control member 1 is pivotally mounted on pivot 2 for movement into either one of two opposite positions. The control member 1 is provided with an arm 3 to which is attached a biasing mechanism 4 which will cause the control member 1 to move into a first stable equilibrium position when the control member is unbalanced in one direction, for example to the left as viewed in the Fig. 1 and will cause the control member to be moved into a second position of the equilibrium when the control member 1 has been unbalanced in a second direction, for example to the right as viewed in Fig. 1. Although the biasing of the control member 1 above described has been illustrated as being of the over center spring type, it will be understood that other types of biasing such as magnetic biasing may be employed.

2

When the control member 1 is unbalanced to the left as viewed in Fig. 1 a first set of contacts 5 are closed and when the control member 1 has been unbalanced to the right as viewed in Fig. 1 a second set of contacts 6 are closed.

In order to cause the control member 1 to be unbalanced to the left in response to a periodic phenomenon, such as the rotation of a shaft, a cam 7 mounted on the shaft 8 actuates the member 9 which through a suitable lever and linkage 10 produces a force on the control member 1 to cause the control member to be unbalanced to the left as viewed in Fig. 1.

The shaft 11 has attached thereto a cam 12 which actuates the member 13 which through a suitable lever linkage system 14 produces a force on the control member 1 to cause that member to be unbalanced to the right as viewed in Fig. 1.

When the contacts 5 are closed current flows from a suitable source of electrical potential 15 through the resistor 16 and when the contacts 6 are closed current flows from the potential source 15 through a resistor 17. The potential developed across the resistors 16 and 17 is used to actuate a suitable indicating device such as the volt meter 18.

The operation of the apparatus shown in Fig. 1 may be understood by referring to Figs. 2, 3 and 4. Referring to Fig. 2 the forces applied to the control member 1 through the lever linkage systems 10 and 14 consists of a series of equally spaced pulses separated by a time interval T with the B pulses lagging the A pulses by a small time interval $\Delta T$. Assuming the control member 1 to be in a position of balance or unstable equilibruim, the first A pulse acts to cause the control member to be unbalanced to the left thus closing contacts 5 and causing a current to flow through the resistor 16. A short interval of time, $\Delta T$, later, a B pulse occurs which causes the control member 1 to be unbalanced to the right causing contacts 6 to close and contacts 5 to open. The voltage across the resistor 16 will then drop to 0 and the voltage across resistor 17 will drop from zero to a predetermined negative value and will remain there until the receipt of the next A pulse.

By referring to the potential graphs of resistors 16 and 17 in Fig. 2, it is seen that the average value of the voltage across the resistor 17 is greater than the average value across the resistor 16. The difference in these two voltages is used to actuate the meter 18 and the greater of these two voltages will determine the polarity

and thus the direction of deflection of the pointer of the meter 17.

The relationship between the voltage developed across the resistors 16 and 17 and $\Delta T$ is shown by Fig. 4. As shown by the discontinuity in the curve at $\Delta T=0$ it is seen that the apparatus is highly sensitive to small values of $\Delta T$.

Fig. 3 illustrates the relationship in time of the input pulses and the potential across the resistors 16 and 17 when the input pulse A leads the input pulse B by an amount $\Delta T$ which is greater than the value of $\Delta T$ shown in Fig. 2.

One of the principal novel features of the apparatus above described is the restoration of an unstable mechanism to a point of equilibrium and causing motion of this unstable system in one direction or the other by infinitesimal orders of time difference between the actuating periodic phenomena. The unstable mechanism in a sense may also be called a regenerative mechanism, since the application of a very small unbalance due to time difference in the phenomena causes a large force to be set up which is in the same direction as the original infinitesimal small force. This mechanical system is a close analogy of the electronic regenerative time comparator disclosed in Patent No. 2,514,369, dated July 11, 1950, issued to M. E. Buehler.

Although this invention has been described and illustrated as applied to phenomena, such as to rotating shafts, it will be understood that the invention may be used to determine the synchronism between other periodic phenomena, such as electric signals, in which case forces which are functions of those signals may be developed by electro magnetics and these electro magnetics so arranged as to cause movement of the control member 1.

What is claimed is:

1. A synchronism detector comprising a pivotably mounted control member, biasing means to cause said control member to tend to remain in a first position when said control member has been unbalanced in one direction and to tend to remain in a second position when said control member has been unbalanced in the other direction, means to apply a first force to said control member to cause said control member to be unbalanced in said one direction in response to a first periodic phenomenon, means to apply a second force to said control member to cause said control member to be unbalanced in said other direction in response to a second periodic phenomenon, a first pair of contacts operated by said control member and so arranged that they are closed when said control member is in said first position and open when said control member is in said second position, a second pair of contacts operated by said control member and so arranged that they are open when said control member is in said first position and closed when said control member is in said second position, electrical indicator means and circuit means including said first and second pair of contacts for energizing said electrical indicator means.

2. A synchronism detector comprising a pivotably mounted control member, biasing means to cause said control member to move into either one of two opposite positions of stable equilibrium, means to apply a first force to said control member to cause said control member to move into one of said two opposite positions in response to a first periodic phenomenon, means to apply a second force to said control member to cause said control member to move into the other of said two opposite positions in response to a second periodic phenomenon, a first pair of contacts operated by said control member and so arranged that they are closed when said control member is in said one position and open when said control member is in said other position, a second pair of contacts operated by said control member and so arranged that they are open when said control member is in said one position and closed when said control member is in said other position, and means for producing a voltage of one polarity when said first pair of contacts are closed and of opposite polarity when said second pair of contacts are closed.

3. A synchronism detector comprising a pivotably mounted control member, over center spring means to cause said control member to tend to remain in a first position when said control member has been unbalanced in one direction and to tend to remain in a second position when said control member has been unbalanced in the other direction, means to apply a first force to said control member to cause said control member to be unbalanced in said one direction in response to a first periodic phenomenon, means to apply a second force to said control member to cause said control member to be unbalanced in said other direction in response to a second periodic phenomenon, a first pair of contacts operated by said control member and so arranged that they are closed when said control member is in said first position and open when said control member is in said second position, a second pair of contacts operated by said control member and so arranged that they are open when said control member is in said first position and closed when said control member is in said second position, a source of D. C. potential, a first resistor, a second resistor, circuit means to connect said first resistor to said source of D. C. potential when said first pair of contacts are closed, circuit means to connect said second resistor to said source of potential when said second set of contacts are closed and an electrical indicator connected across said first resistor and said second resistor.

4. A synchronism detector comprising a pivotally mounted control member, biasing means to cause said control member to tend to remain in a first position when said control member has been unbalanced in one direction and to tend to remain in a second position when said control member has been unbalanced in the other direction, means to apply a first force to said control member to cause said control member to be unbalanced in said one direction in response to a first periodic phenomenon, means to apply a second force to said control member to cause said control member to be unbalanced in said other direction in response to a second periodic phenomenon, a first pair of contacts operated by said control member and so arranged that they are closed when said control member is in said first position and open when said control member is in said second position, a second pair of contacts operated by said control member and so arranged that they are open when said control member is in said first position and closed when said control member is in said second position, means to produce a first potential having a predetermined polarity when said first pair of contacts are closed and to produce a second potential having a polarity opposite to said predetermined polarity when said second pair of contacts

are closed, an electrical indicator and circuit means to energize said electrical indicator with said first potential and said second potential.

MAURICE E. BUEHLER.

References Cited in the file of this patent

UNITED STATES PATENTS

| Number | Name | Date |
|---|---|---|
| 224,964 | Stephenson | Feb. 24, 1880 |
| 1,058,051 | Guett | Apr. 8, 1913 |
| 1,510,440 | Gilman | Sept. 30, 1924 |
| 1,685,113 | Wilms | Sept. 25, 1928 |
| 2,246,516 | Herzog | June 24, 1941 |
| 2,412,605 | Drake | Dec. 17, 1946 |
| 2,555,491 | Hooven | June 5, 1951 |

FOREIGN PATENTS

| Number | Country | Date |
|---|---|---|
| 570,725 | Great Britain | July 19, 1945 |