(19) Europäisches Patentamt
European Patent Office
Office européen des brevets

(11) EP 0 484 618 B1

(12) **EUROPEAN PATENT SPECIFICATION**

(45) Date of publication and mention of the grant of the patent:
17.01.1996 Bulletin 1996/03

(51) Int Cl.[6]: **G01R 23/16**

(21) Application number: **91106628.0**

(22) Date of filing: **24.04.1991**

(54) Automatic scaling for display of modulation domain measurement

Automatische Skalierung der Anzeige einer Modulationsbereichsmessung

Echelle automatique de l'affichage d'une mesure de domaine de modulation

(84) Designated Contracting States:
DE FR GB

(30) Priority: **09.11.1990 US 612036**

(43) Date of publication of application:
13.05.1992 Bulletin 1992/20

(73) Proprietor: **Hewlett-Packard Company**
Palo Alto, California 94304 (US)

(72) Inventor: **Ferguson, Keith M.**
Saratoga, CA 95070 (US)

(74) Representative: **Schoppe, Fritz, Dipl.-Ing.**
D-82049 Pullach (DE)

(56) References cited:
EP-A- 0 349 328

- **HEWLETT-PACKARD JOURNAL. vol. 40, no. 1, February 1989, PALO ALTO US pages 13 - 21; T.K.NIMORI ET AL.: 'Firmware System Design for a Frequency and Time Interval Analyzer'**
- **MICROWAVE JOURNAL. vol. 26, no. 4, April 1983, DEDHAM US pages 125 - 133; T. PECCOLO: 'The Spectrum Analyzer Comes of Age'**
- **MICROWAVE JOURNAL. vol. 34, no. 1, January 1991, NORWOOD US pages 169 - 171; 'A**
- **Modulation-Domain Analyzer'**

Note: Within nine months from the publication of the mention of the grant of the European patent, any person may give notice to the European Patent Office of opposition to the European patent granted. Notice of opposition shall be filed in a written reasoned statement. It shall not be deemed to have been filed until the opposition fee has been paid. (Art. 99(1) European Patent Convention).

EP 0 484 618 B1

Printed by Jouve, 75001 PARIS (FR)

Description

The invention relates generally to measuring and displaying signal attribute measurement data, and in particular to automatically setting measurement parameters and scaling display parameters for frequency measurement data for time varying signals, e.g., frequency modulated signals. One application of the invention is in producing a display of frequency versus time measurements for a signal with dynamic frequency. Another application of the invention is in producing a histogram display showing the frequency distribution of a set of frequency measurements.

To analyze the behavior of a signal over a period of time, a block of time-related measurements is taken. A display of amplitude measurements versus time will produce a waveform of the signal's behavior.

Continuous time interval measurements on a signal provide a way to analyze characteristics of the signal in the modulation domain, i.e., the behavior of the frequency or phase of the signal versus time. This is different than classic ways of measuring and displaying data about signals. An oscilloscope shows amplitude versus time: the time domain. A spectrum analyzer shows amplitude versus frequency: the frequency domain.

Continuous time interval measurements make it simpler to study dynamic frequency behavior of a signal: frequency drift over time of an oscillator, the frequency hopping performance of an agile transmitter, chirp linearity and phase switching in radar systems.

An example of an instrument that generates this type of time stamp and continuous time interval data is described in "Frequency and Time Interval Analyzer Measurement Hardware", Paul S. Stephenson, Hewlett-Packard Journal, Vol. 40, No. 1, February, 1989, pages 35-41.

Instead of a traditional frequency counter's numeric display, the modulation domain analyzer uses a graphic display of frequency versus time to efficiently communicate the far greater information bandwidth to the operator. The change is analogous to the change from a voltmeter to an oscilloscope for voltage versus time measurements.

The measurement setup requirements for making and displaying a measurement in the modulation domain are potentially more confusing and intimidating for the operator, and therefore a method for automatically scaling the instrument parameters and the display for a particular input signal is desirable to make the instrument easier to use.

In measuring frequency modulated signals, there can be a tradeoff between using a measurement setup that gives the best resolution of the signal's frequency and a measurement setup that gives the best data of the dynamic behavior of the frequency. For a slowly modulated signal, measuring the frequency over a large number of cycles gives better resolution of the frequency. However, for a rapidly modulated signal, measuring over too many cycles can average out the modulation.

Hewlett-Packard Journal, Volume 40, No. 1, February 1989, pages 13 to 21, discloses a firmware system design for a frequency and time interval analyzer. In the prior art analyzer, an autotriggering function provides automatic selection of the trigger level of the channel inputs. The minimum and maximum peak signal amplitudes are determined by a binary search algorithm. In the prior art instrument, the frequency is calculated by applying a reciprocal counting technique on the basis of a number of input events divided by a gate time. The gate time is the product of the difference in reference clock edges and the period of the clock.

The invention is based on the object of providing a method for examining an input signal and setting a frequency measuring instrument to a state which will produce a stable, centered and properly scaled display of the signal.

This object is achieved by a method in accordance with claim 1.

The method of the invention examines the input signal and attempts to set the instrument to a state which will produce a stable, centered, properly scaled display of the signal, automatically.

Throughout the process, the system of the invention automatically changes only those parameters necessary to make a valid measurement and to present a meaningful display to the user, and leaves unchanged other parameters the user may have intentionally set.

The method uses a multistep process for determining values for the vertical frequency scale and the horizontal time scale of the display. These values can be used to determine the measurement parameters for either a frequency versus time display of a histogram display.

After finding the 50 percent voltage threshold on whichever input channel is being used, the system performs an interactive process to determine the minimum and maximum input frequency. It then checks the ratio of these two frequencies against instruments limits, and adjusts the display values, if necessary to show only the higher frequencies. It then seeks the best frequency resolution while maintaining the measurement and display of frequency modulation. The system attempts to display the signal in the center half of the display, and tries to use values with no more than two significant digits for the center and span.

Lastly, the horizontal time per division is set to display approximately four cycles of the modulation, if possible.

The automatic scaling method for time-interval measurements follows a similar process.

Description of the Drawings

Figure 1 shows a schematic block diagram of a modulation domain measurement instrument 100 of the kind using the automatic scaling method of the invention.

Figures 2, 3, 4 and 5 show a flow chart illustrating

the operation of the invention to set the measurement parameters of the instrument and to set the vertical (frequency per division) scale of the display of the instrument.

Figure 6 shows a flow chart illustrating the operation of the invention to set the horizontal (time per division) scale of the display of the instrument.

Description of a Preferred Embodiment

Figure 1 shows a schematic block diagram of a modulation domain measurement instrument 100 of the kind using the automatic scaling method of the invention. The front panel 101 of the instrument has a display 103, signal input ports 105 and user input buttons 107. A microprocessor 109 controls the instrument in response to input selections made by the user. Measurement circuits 111 receive the input signal on line 113, and measure the frequency of the signal, sending the frequency data to a memory accessible to microprocessor 109. Certain parameters for the measurement operation, in particular the duration of the "measurement gate", the period during which a frequency measurement is made, can be controlled by microprocessor 109. By controlling the duration of the measurement gate, the instrument can be set to make the best compromise between measuring frequency resolution and measuring modulation on a given input signal.

The measurement circuits 111 capture information from an input signal, and pre-process the data extracted from the input signal. The measurement circuits 111 include counters that produce time and event stamps and processors to perform operations on the data that result in either instantaneous frequency or time-interval. The frequency is the difference between corresponding event stamp values divided by the difference between successive time stamp values, cycles divided by time. The results are stored in memory, available for further processing and graphical display by the processor 109.

The measurement circuits 111 can operate in a mode called constant event mode, in which the duration of the measurement gate is set to a predetermined number of events, i.e., input signal cycles. This mode is used for the automatic scaling method of the invention.

Microprocessor 109 processes the frequency measurement data to produce a display of the frequency versus time behavior of the input signal on the display 103. In order to best display the measurement data on the display, the maximum and minimum values for the two axes, frequency and time should be set based on the measurement data.

The operation of microprocessor 109 to perform the automatic scaling method of the invention, to set the parameters of the measurement circuits 111 and the parameters of the display 103 is described in more detail below, in connection with the flow chart shown in Figures 2, 3, 4, 5, and 6. Figures 2, 3, 4 and 5 show the operation to set the measurement parameters and to set the vertical (frequency per division) scale of display 103. Figure 6 shows the operation to set the horizontal (time per division) scale of display 103.

Referring to Figure 2, the first step, 201 is to find the 50% voltage threshold on the input signal. This operation is performed similarly to the way an oscilloscope finds the center of an input signal.

Next, in steps 203-225, is to find the minimum and maximum input frequency. This is an iterative process. In step 203 the processor sets the measurement circuits in constant event mode to a number of events that provides an initial gate duration large enough to ensure that a valid measurement will be made at any frequency up to the maximum for the instrument. As will be explained below, the measurement gate duration is subsequently changed by varying number of events over which the constant event measurements are made.

In step 205 the circuits perform a constant event, two stamp, continuous, frequency measurement Only the minimum and maximum frequency values are recorded.

In step 207, the result is tested to determine if a valid measurement was made. If step 207 finds the result is not a valid measurement, too small a gate duration was used, so that invalid gate duration is stored and the gate duration is increased in step 211 before making another measurement. If step 207 finds a valid result, control flows to step 213 via decision step 209, and the processor recalculates the gate duration using the maximum frequency detected In step 205. In step 215 this new gate duration is checked against previous gate durations that yielded invalid measurements. If the new gate duration is less than or equal to a gate duration that yielded an invalid measurement the gate duration is increased in step 217. Then the measurement of step 205 is repeated. As long as a valid measurement results, steps 205, 213, 215 and 217 are repeated, calculating a gate duration after each measurement iteration, until the smallest number is found permitting a valid measurement, at the frequency measured, as tested in step 209.

In the terminology of a traditional frequency counter, steps 203 to 217 find the minimum gate duration that the instrument can use to measure the frequency of input signal. Although measuring at the minimum gate duration reduces the resolution of the frequency measurement, it improves the chances of finding the maximum and minimum values for signals modulated at a high rate (a longer gate time would average out more of the modulation).

Next, referring to Figure 3, in step 219, the processor determines the ratio of the maximum frequency to the minimum frequency. In step 221, the ratio is tested against the limit on the ratio of the top to bottom frequencies that can be used on the vertical scale of the display 103. If the ratio is within the scale limit, the process proceeds directly to step 225. If the ratio is not within the scale limit, step 223 calculates a minimum frequency that can be displayed, based on the maximum frequency detected and the scale limit.

In step 225, a new measurement is made in which all measured frequencies below this limit are ignored, and a new maximum and minimum are determined based only on those frequencies above this limit.

Steps 227 to 241, shown on Figure 4, attempt to optimize the resolution of the measurement by adjusting the gate duration and monitoring the frequency range and the maximum and minimum frequencies measured. For signals with low level frequency modulation or noise, the inherent resolution uncertainty of measurements with a short duration gate may be a significant component of the apparent range between the minimum and maximum frequencies measured. Increasing the gate duration (increasing the number of input cycles averaged for each measurement) to improve frequency measuring resolution risks averaging out the desired modulation or noise. Signals with low levels of high frequency modulation or noise may be impossible to measure with sufficient resolution to accurately view the variations.

In step 227, the frequency range, the difference between the maximum and the minimum frequency is determined. In step 229, the range to resolution ratio is determined. The resolution is proportional to the gate duration, with better resolution for longer gate duration. The range to resolution ratio Is stored in step 231. In decision step 233, if the range is large compared to the resolution (ratio is large), resolution is considered sufficient, and control flows directly to step 243.

If step 233 finds the range close to the resolution, control proceeds to steps 235 to 241 to try to improve the measurement by changing the gate duration. As lohg as the gate duration is below the limit, checked in step 235, the gate duration is increased in step 237 and another measurement of minimum and maximum frequencies is made in step 239. Flow then proceeds through steps 227 to 233 to examine the resulting range to resolution ratio.

If step 235 finds the gate duration at the limit, now proceeds to step 241, where the stored range to resolution ratios are examined, and the gate duration set to the value that produced the highest range to resolution ratio, which is the optimum measurement setting for the input signal. From step 241, control flows to step 243, shown on Figure 5, in which a measurement is made based on the final gate duration value.

Steps 245 and 247, shown on Figure 5, set the parameters of the vertical axis of display 103, based on the measured minimum and maximum frequencies. In step 245, the center value and the span of the display are set to display the measured frequencies on the middle half of the display. The procedure for this step is similar to the procedure followed for centering an oscilloscope display. In step 247, the display parameters are adjusted to rounded numbers if the result is a small movement of the position of the measurement values. Rounded numbers have one or two significant figures.

The flow chart of Figure 6 shows the operation of setting the horizontal scale (time per division) for display 103. First, at step 601, the range to resolution ratio is checked. If it is large, control flows to step 603 and a hysteresis band is set to 1/2 of the measured frequency range. If the ratio is not large, in step 605 the hysteresis band is set to 3/4 of the measured range.

From step 603 or 605, control flows to step 607, and a measurement is made for a set time duration (e.g., 250 millisec.) counting the positive crossings through the hysteresis band. From the crossings counted in a known time, the approximate period of the modulation cycles is calculated in step 609.

Then, in step 611, the time scale is set to display approximately four modulation cycle periods. In the preferred embodiment, the time scale per division is adjusted to a number with one significant digit.

While there have been shown and described what are at present considered the preferred embodiments of the present invention, it will be obvious to those skilled in the art that various changes and modifications may be made therein without departing from the scope of the Invention as defined by the appended claim.

Claims

1. A method for examining an input signal and setting a frequency measuring instrument to a state which will produce a measurement and a display of the input signal, comprising:

   finding (201) the 50 percent voltage threshold for the input signal and setting the instrument for that voltage;

   finding (203-225) the minimum and maximum frequencies of the input signal by setting (209,213,215,217) a selected measuring parameter to a value permitting a valid measurement of the minimum and maximum frequencies;

   determining (227-241) the ratio of the frequency range to frequency resolution, wherein the frequency range is the difference between the maximum frequency and the minimum frequency and the frequency resolution is proportional to the selected measuring parameter, while varying said selected measuring parameter;

   setting (233-241) the varied parameter at a value that produces a sufficiently large ratio of the frequency range to the frequency resolution;

   if no parameter values produce a sufficiently large ratio of the frequency range to the frequency resolution, setting (235,241) the varied parameter at the values that produce a maxi-

mum determined ratio of the frequency range to the frequency resolution; and

setting (243-247) the frequency scale of the display (103) of the instrument based on the determined maximum and minimum frequencies of the input signal.

Patentansprüche

1. Ein Verfahren zum Untersuchen eines Eingangssignales und zum Einstellen eines Frequenzmeßgeräts auf einen Zustand, der eine Messung und eine Anzeige des Eingangssignals erzeugt, mit folgenden Schritten:

   Finden (201) der 50%-Spannungsschwelle für das Eingangs-signal und Einstellen des Geräts für diese Spannung;

   Finden (203 bis 225) der minimalen und der maximalen Frequenz des Eingangssignals durch Einstellen (209, 213, 215, 217) eines ausgewählten Meßparameters auf einen Wert, der eine gültige Messung der minimalen und der maximalen Frequenz ermöglicht;

   Bestimmen (227 bis 241) des Verhältnisses von Frequenzbereich zu Frequenzauflösung, wobei der Frequenzbereich die Differenz zwischen der maximalen Frequenz und der minimalen Frequenz und die Frequenzauflösung proportional zu dem ausgewählten Meßparameter ist, während der ausgewählte Meßparameter verändert wird;

   Einstellen (233 bis 241) des geänderten Parameters auf einen Wert, der ein ausreichend großes Verhältnis des Frequenzbereichs zu der Frequenzauflösung erzeugt;

   wenn keine Parameterwerte ein ausreichend großes Verhältnis des Frequenzbereichs zu der Frequenzauflösung erzeugen, Einstellen (235, 241) der geänderten Parameter auf die Werte, die ein maximal bestimmtes Verhältnis des Frequenzbereichs zu der Frequenzauflösung erzeugen; und

   Einstellen (243 bis 247) der Frequenzskala der Anzeige (103) des Geräts basierend auf der bestimmten maximalen und minimalen Frequenz des Eingangssignals.

Revendications

1. Procédé d'analyse d'un signal d'entrée et de réglage d'un instrument de mesure de fréquence à un état destiné à produire une mesure et un affichage du signal d'entrée, consistant à :

   trouver (201) le seuil correspondant à la moitié de la tension pour le signal d'entrée et régler l'instrument pour cette tension ;
   trouver (203-225) les fréquences minimale et maximale du signal d'entrée en réglant (209, 213, 215, 217) un paramètre de mesure choisi à une valeur permettant de mesurer correctement les fréquences minimale et maximale ;
   déterminer (227-241) le rapport de la bande de fréquences sur la définition en fréquence, dans lequel le bande de fréquences est la différence entre la fréquence maximale et la fréquence minimale et la définition en fréquence est proportionnelle au paramètre de mesure choisi, lorsqu'on fait varier ledit paramètre de mesure choisi ;
   régler (233-241) le paramètre modifié à une valeur produisant un rapport suffisamment grand de la bande de fréquences sur la définition en fréquence ;
   si aucune valeur du paramètre ne produit un rapport suffisamment grand de la bande de fréquences sur la définition en fréquence, régler (235-241) le paramètre modifié aux valeurs produisant un rapport maximal déterminé de la bande de fréquences sur la définition en fréquence ;
   régler (243-247) l'échelle de fréquence de l'affichage (103) de l'instrument, basée sur les fréquences maximale et minimale déterminées du signal d'entrée.

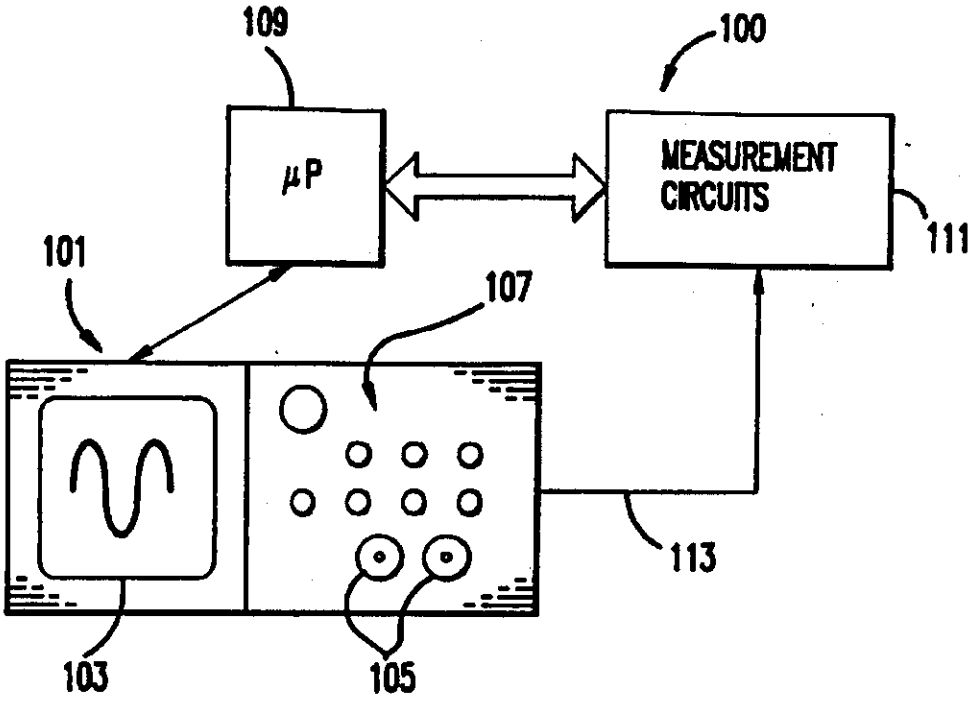
109
100
μP
MEASUREMENT CIRCUITS
111
101
107
113
103
105

FIG.1

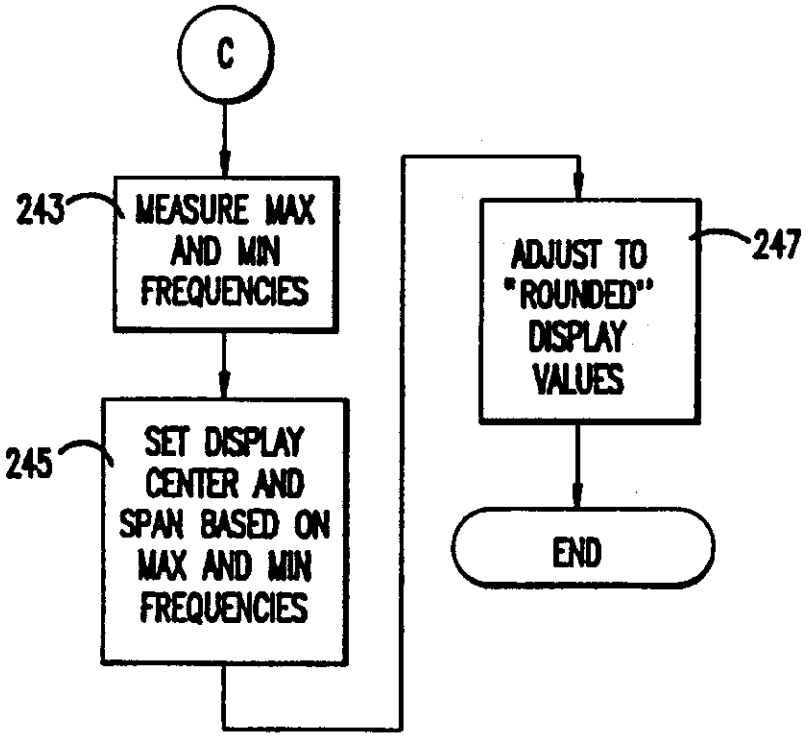
C
243
MEASURE MAX AND MIN FREQUENCIES
245
SET DISPLAY CENTER AND SPAN BASED ON MAX AND MIN FREQUENCIES
247
ADJUST TO "ROUNDED" DISPLAY VALUES
END

FIG.5

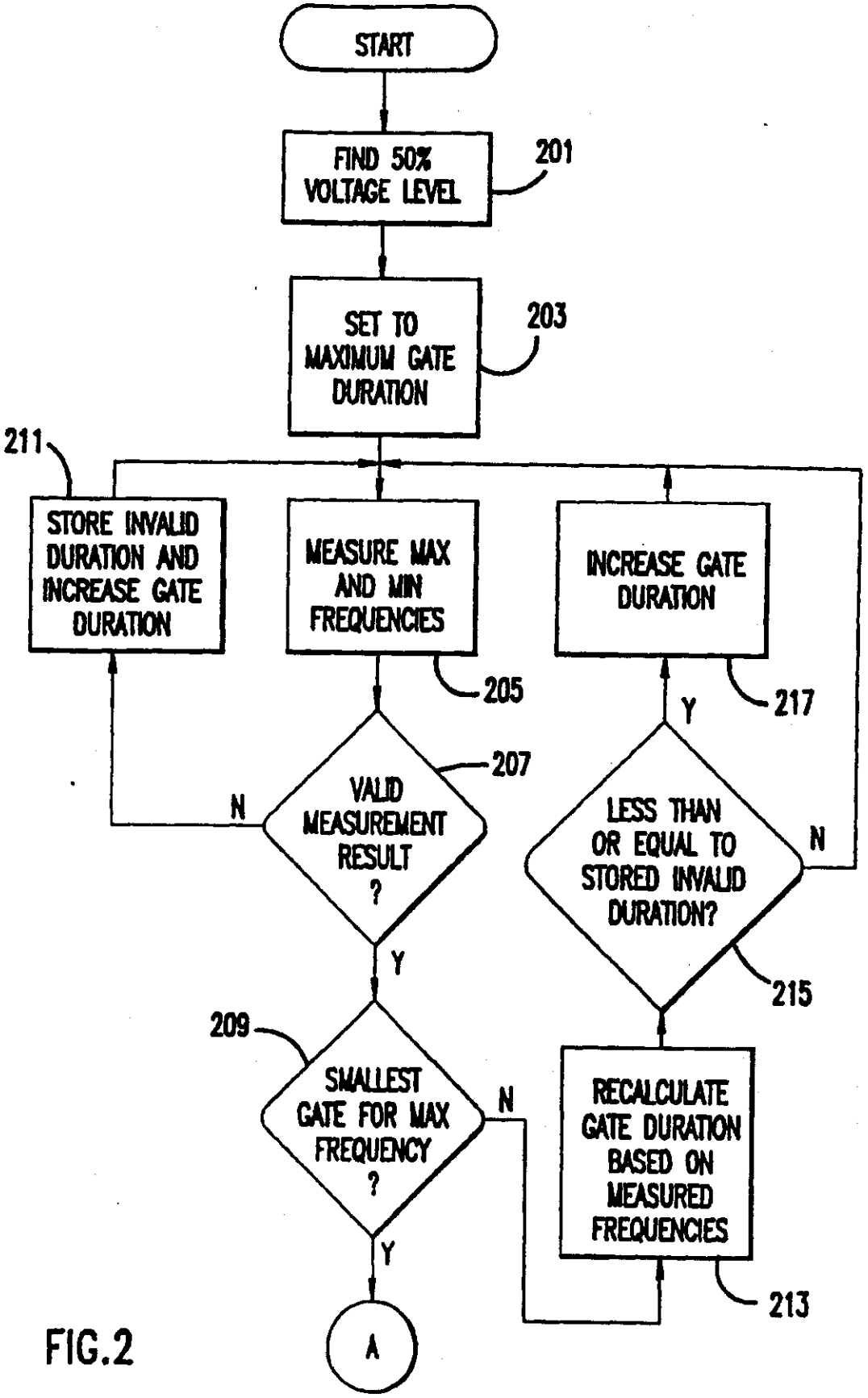
START
FIND 50% VOLTAGE LEVEL
201
SET TO MAXIMUM GATE DURATION
203
211
STORE INVALID DURATION AND INCREASE GATE DURATION
MEASURE MAX AND MIN FREQUENCIES
205
INCREASE GATE DURATION
217
Y
N
VALID MEASUREMENT RESULT ?
207
LESS THAN OR EQUAL TO STORED INVALID DURATION?
N
215
Y
209
SMALLEST GATE FOR MAX FREQUENCY ?
N
RECALCULATE GATE DURATION BASED ON MEASURED FREQUENCIES
213
Y
A

FIG.2

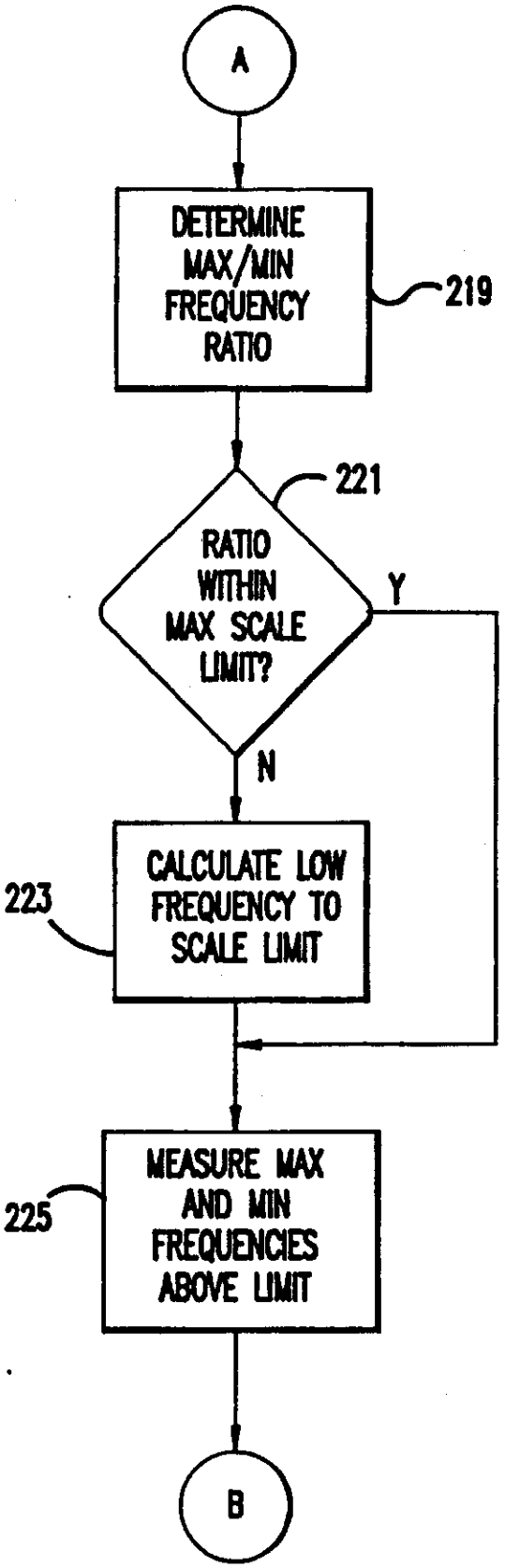
A
DETERMINE MAX/MIN FREQUENCY RATIO
219
221
RATIO WITHIN MAX SCALE LIMIT?
Y
N
223
CALCULATE LOW FREQUENCY TO SCALE LIMIT
225
MEASURE MAX AND MIN FREQUENCIES ABOVE LIMIT
B

FIG.3

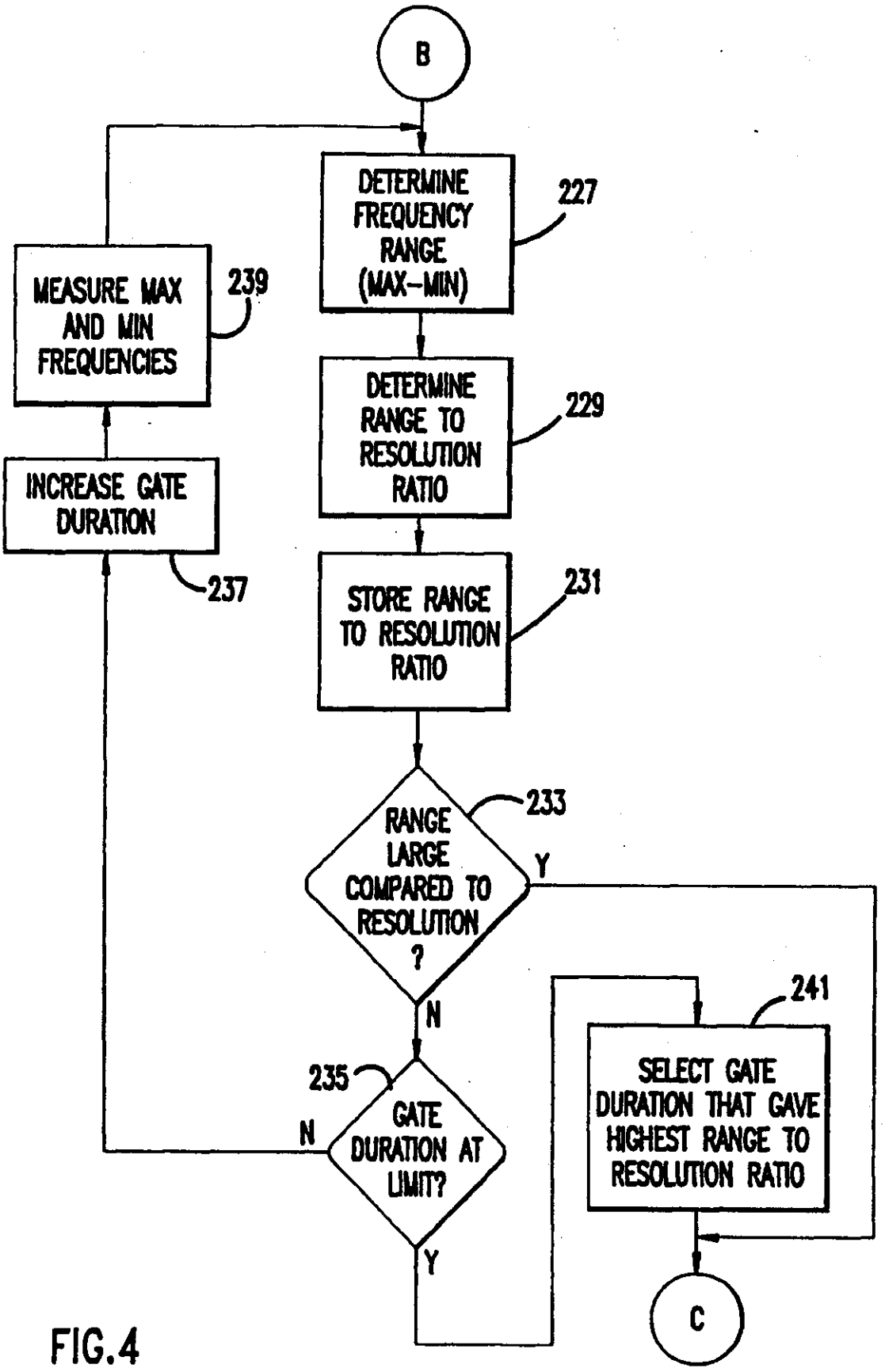
B
DETERMINE FREQUENCY RANGE (MAX-MIN)
227
DETERMINE RANGE TO RESOLUTION RATIO
229
STORE RANGE TO RESOLUTION RATIO
231
RANGE LARGE COMPARED TO RESOLUTION ?
233
Y
N
GATE DURATION AT LIMIT?
235
N
Y
MEASURE MAX AND MIN FREQUENCIES
239
INCREASE GATE DURATION
237
SELECT GATE DURATION THAT GAVE HIGHEST RANGE TO RESOLUTION RATIO
241
C

FIG.4

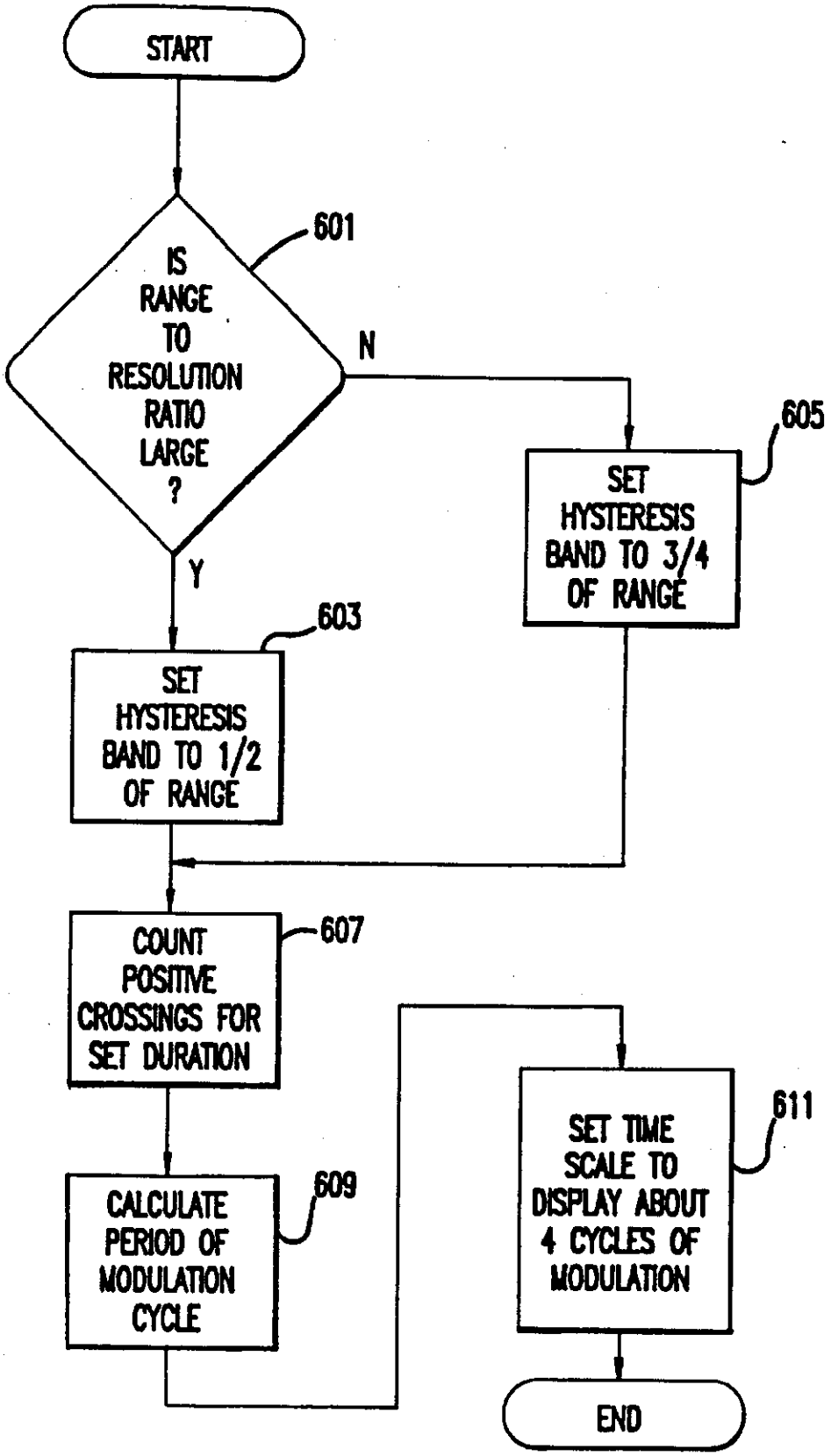
START
IS RANGE TO RESOLUTION RATIO LARGE ?
601
N
Y
SET HYSTERESIS BAND TO 3/4 OF RANGE
605
SET HYSTERESIS BAND TO 1/2 OF RANGE
603
COUNT POSITIVE CROSSINGS FOR SET DURATION
607
CALCULATE PERIOD OF MODULATION CYCLE
609
SET TIME SCALE TO DISPLAY ABOUT 4 CYCLES OF MODULATION
611
END

FIG.6

REGISTER ENTRY FOR EP0484618

European Application No EP91106628.0 filing date 24.04.1991

Priority claimed:
09.11.1990 in United States of America - doc: 612036

Designated States DE FR GB

Title AUTOMATIC SCALING FOR DISPLAY OF MODULATION DOMAIN MEASUREMENT.

Applicant/Proprietor
HEWLETT-PACKARD COMPANY, Mail Stop 20 B-O, 3000 Hanover Street, Palo Alto, California 94304, United States of America see (5) [ADP No. 50014570001]

Inventor
KEITH M. FERGUSON, 18900 Alcott Way, Saratoga, CA 95070, United States of America [ADP No. 59714394001]

Classified to
G01R

Address for Service
HEWLETT-PACKARD LIMITED, Building 2, Filton Road, Stoke Gifford, BRISTOL, BS12 6QZ, United Kingdom [ADP No. 00001933005]

EPO Representative
DIPL.-ING. FRITZ SCHOPPE, Seitnerstrasse 42, W-8023 Pullach bei München, Federal Republic of Germany [ADP No. 57086134001]

Publication No EP0484618 dated 13.05.1992
Publication in English

Examination requested 26.10.1992

Patent Granted with effect from 17.01.1996 (Section 25(1)) with title
AUTOMATIC SCALING FOR DISPLAY OF MODULATION DOMAIN MEASUREMENT

15.12.1995 Notification from EPO of change of EPO Representative details from
DIPL.-ING. FRITZ SCHOPPE, Seitnerstrasse 42, W-8023 Pullach bei München, Federal Republic of Germany [ADP No. 57086134001]
to
FRITZ SCHOPPE DIPL.-ING., Patentanwalt, Georg-Kalb-Strasse 9, D-82049 Pullach, Federal Republic of Germany [ADP No. 57086134001]
Entry Type 25.14 Staff ID. RD06 Auth ID. EPT

**** END OF REGISTER ENTRY ****

RENEWAL DETAILS

PUBLICATION NUMBER EP0484618

PROPRIETOR(S)

Hewlett-Packard Company, Mail Stop 20 B-O, 3000 Hanover Street,
Palo Alto, California 94304, United States of America See (3)

DATE FILED 24.04.1991

DATE GRANTED 17.01.1996

DATE NEXT RENEWAL DUE 24.04.1997

DATE NOT IN FORCE

DATE OF LAST RENEWAL 22.03.1996

YEAR OF LAST RENEWAL 06

STATUS PATENT IN FORCE

**** END OF REPORT ****