(12) INTERNATIONAL APPLICATION PUBLISHED UNDER THE PATENT COOPERATION TREATY (PCT)

(19) World Intellectual Property Organization
International Bureau

(43) International Publication Date
13 January 2022 (13.01.2022)

WIPO | PCT

(10) International Publication Number
WO 2022/010642 A1

(51) International Patent Classification: *E02F 9/28* (2006.01)

(21) International Application Number: PCT/US2021/038436

(22) International Filing Date: 22 June 2021 (22.06.2021)

(25) Filing Language: English

(26) Publication Language: English

(30) Priority Data:
16/921,302 06 July 2020 (06.07.2020) US

(71) Applicant: **CATERPILLAR INC.** [US/US]; 100 NE Adams Street, Peoria, Illinois 61629-9510 (US).

(72) Inventor: **BJERKE, Nathan R.**; 5600 W. Timberedge Drive, Peoria, IL 61615 (US).

(74) Agent: **FISHER, Bart A.** et al.; Caterpillar Inc., 100 NE Adams Street - AH9510, Peoria, IL 61629-9510 (US).

(81) Designated States *(unless otherwise indicated, for every kind of national protection available)*: AE, AG, AL, AM, AO, AT, AU, AZ, BA, BB, BG, BH, BN, BR, BW, BY, BZ, CA, CH, CL, CN, CO, CR, CU, CZ, DE, DJ, DK, DM, DO, DZ, EC, EE, EG, ES, FI, GB, GD, GE, GH, GM, GT, HN, HR, HU, ID, IL, IN, IR, IS, IT, JO, JP, KE, KG, KH, KN, KP, KR, KW, KZ, LA, LC, LK, LR, LS, LU, LY, MA, MD, ME, MG, MK, MN, MW, MX, MY, MZ, NA, NG, NI, NO, NZ, OM, PA, PE, PG, PH, PL, PT, QA, RO, RS, RU, RW, SA, SC, SD, SE, SG, SK, SL, ST, SV, SY, TH, TJ, TM, TN, TR, TT, TZ, UA, UG, US, UZ, VC, VN, WS, ZA, ZM, ZW.

(84) Designated States *(unless otherwise indicated, for every kind of regional protection available)*: ARIPO (BW, GH, GM, KE, LR, LS, MW, MZ, NA, RW, SD, SL, ST, SZ, TZ, UG, ZM, ZW), Eurasian (AM, AZ, BY, KG, KZ, RU, TJ, TM), European (AL, AT, BE, BG, CH, CY, CZ, DE, DK, EE, ES, FI, FR, GB, GR, HR, HU, IE, IS, IT, LT, LU, LV, MC, MK, MT, NL, NO, PL, PT, RO, RS, SE, SI, SK, SM, TR), OAPI (BF, BJ, CF, CG, CI, CM, GA, GN, GQ, GW, KM, ML, MR, NE, SN, TD, TG).

(54) Title: RETENTION SYSTEM FOR RIPPER TIPS

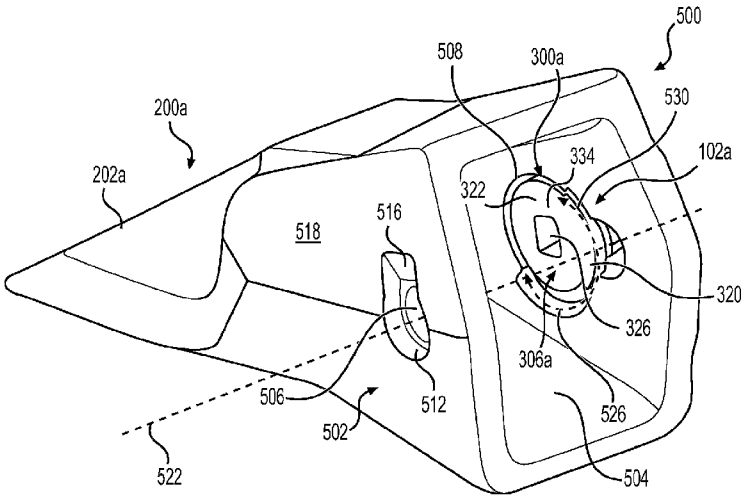

FIG. 26

(57) Abstract: A work tool or a wear member (200a) includes a working portion or a wear portion (202a), a hollow portion (502) that further defines a lock receiving aperture (508) defining an axis of rotation (210a), a radial direction (134a), and a circumferential direction (316a). The axis of rotation (210a) is transverse to the direction of assembly (520) of work tool or wear member (200a) as the member is slid over a nose portion (152) of a tool adaptor or the like, and the axis of rotation (210a) is spaced away from the direction (522) the pin receiving thru-hole (506) extends a predetermined distance (524) measured along the direction of assembly (520).

WO 2022/010642 A1

[Continued on next page]

Published:
— *with international search report (Art. 21(3))*

Description

RETENTION SYSTEM FOR RIPPER TIPS

Technical Field

The present disclosure relates to retention assemblies for attaching work tools or wear members such as ripper tips to the ripper shank on motor graders or other similar equipment. More specifically, the present disclosure relates to a retention system that may be easily used for attaching such work tools or wear members to the ripper shank by rotating a retainer ninety degrees using a square driver or the like.

Background

Machines such as motor graders employ work tools or wear members such as ripper tips to rip up soil, rocks, or other ground material. Various systems have been employed to attach these work tools or wear members to a tool adaptor such as a ripper shank so that they may be replaced.

For example, U.S. Pat. No. 10,047,503 B2 discloses a retainer system for a ground engaging tool. In one exemplary embodiment, the retainer system may include a lock having a lock rotation axis, including an outer surface extending about the lock rotation axis. The retainer system may also include a retainer bushing including an inner surface that is configured to rotatably receive the outer surface of the lock. The lock may have a slot for receiving a boss disposed on the nose of the tool adaptor so once the lock is rotated, the ground engaging tool is attached to the tool adaptor.

As can be seen by looking at FIG. 2, the bosses add material to the tool adaptor, increasing cost. Also, if the boss becomes damaged, then the tool adaptor will need to be repaired.

Accordingly, there exists a need for a retention system that allows a wear member or a work tool to be attached to a ripper shank that requires less material and that may be more readily repaired.

Summary of the Disclosure

A ripper shank and ripper tip subassembly for attaching ripper tips to a machine according to an embodiment of the present disclosure is provided. The subassembly may comprise a ripper shank including a top ripper assembly attachment portion, and a bottom ripper tip retention portion. The assembly may further comprise a lock, a retainer, and a pin. The bottom ripper tip retention portion includes a nose portion defining an axis of extension, and a pin receiving aperture extending completely through nose portion.

A retaining system according to an embodiment of the present disclosure may comprise a lock including a drive portion, which defines an axis of rotation, a radial direction, and a circumferential direction. The lock may further include a locking portion including an outer peripheral surface, and a wing that extends radially outwardly from the outer peripheral surface. The locking portion is connected to the drive portion by a wall, and may further comprise a rib extending axially from the wall toward the drive portion forming an annular cavity, defining at least one detent receiving aperture that is disposed in the annular cavity. A retainer that is configured to fit within the annular cavity may also be provided.

A work tool or a wear member according to an embodiment of the present disclosure may comprise a working portion or a wear portion, and a hollow portion defining an exterior, and a nose portion receiving cavity with a direction of assembly, and a pin receiving thru-hole that is disposed along the direction of assembly and that extends completely through the hollow portion along a direction that is transverse to the direction of assembly, and that is in communication with the nose portion receiving cavity. The hollow portion further defines a lock receiving aperture defining an axis of rotation, a radial direction, and a circumferential direction, and the axis of rotation is transverse to the direction of assembly. Also, the axis of rotation is spaced away from the direction the pin receiving thru-hole extends a predetermined distance measured along the direction of assembly.

Brief Description of the Drawings

FIG. 1 is a side view of a motor grader that may employ a retaining system according to an embodiment of the present disclosure for attaching a work tool or a wear member such as a ripper tip to a ripper shank or a grading bit to an adaptor board, forming a ripper assembly or an adaptor board assembly that is attached to the machine.

FIG. 2 is an enlarged side view of the adaptor board assembly of FIG. 1.

FIG. 3 is a front oriented perspective view of the adaptor board assembly of FIGS. 1 and 2 removed from the machine showing a plurality of bits attached to the adaptor board using a retaining system (or retaining assembly) according to an embodiment of the present disclosure.

FIG. 4 is a front oriented perspective view of the adaptor board of FIG. 3 with the retaining assemblies and the plurality of bits removed.

FIG. 5 is a front oriented perspective view of a section of the adaptor board of FIG. 3 showing a single instance of a bit attached to the adaptor board using a single retaining assembly according to an embodiment of the present disclosure.

FIG. 6 is a rear oriented perspective view of the components of FIG. 5 illustrating how the bit may be inserted or removed from the shank receiving aperture of the adaptor board when the lock of the retaining assembly is in the unlocked configuration.

FIG. 7 is a rear oriented perspective view of the section of the adaptor board and the retaining assembly of FIG. 6 with the lock in an unlocked configuration ready to receive the shank of a bit. The bit including its shank is not present to more clearly show the lock.

FIG. 8 shows the lock of FIG. 7 in a locked configuration by rotating the lock ninety degrees.

FIG. 9 shows the lock of the retaining assembly of FIG. 8 mating with the shank of a bit, holding the bit into place.

FIG. 10 is side sectional view of FIG. 5 depicting the retainer and the lock engaging the apertures of the adaptor board and the shank of the bit. The apertures of the skirt of the lock that allow the shank of the bit to be inserted or removed may also be seen as the lock is shown in the unlocked configuration.

FIG. 11 is a front oriented perspective view of the lock employed in FIGS. 5 thru 10 shown in isolation.

FIG. 12 is a front view of the lock of FIG. 11. The square shaped drive aperture and the detent apertures are clearly shown.

FIG. 13 is a rear view of the lock of FIG. 11. The skirt and the shank receiving apertures of the lock are illustrated.

FIG. 14 is a top view of the lock of FIG. 11. The driver portion, the skirt, and the shank receiving apertures are shown.

FIG. 15 is a side view of the lock of FIG. 11. The driver portion, the skirt, and the shank receiving apertures are shown.

FIG. 16 is a perspective view of the bit employed in FIGS. 5 thru 10 shown in isolation. The skirt receiving slots are clearly shown in the shank portion of the bit.

FIG. 17 is a perspective view of the retainer employed in FIGS. 5 thru 10 shown in isolation. The detents, the undulating ring portion, and the tabs are clearly shown.

FIG. 18 is a front view of the retainer of FIG. 17.

FIG. 19 is a side view of the retainer of FIG. 17.

FIG. 20 is an enlarged side view of the ripper assembly of FIG. 1.

FIG. 21 is a front oriented perspective view of a ripper shank and a ripper tip subassembly that forms a part of the ripper assembly of FIGS. 1 and 20 removed from the machine showing a retaining system (or retaining assembly) according to an embodiment of the present disclosure securing the ripper tip to the ripper shank. The head of a customized pin as well as a pry slot are shown on the right side of the ripper tip.

FIG. 22 is an enlarged detail view of the retaining system of FIG. 21, showing the pry slot, and customized pin with anti-rotation/orientation features shown more clearly.

FIG. 23 is an alternate front oriented perspective view of the ripper shank and ripper tip subassembly of FIG. 21 showing the left side of the ripper tip, as well as the free end of the customized pin, the retainer, and the lock of the retaining system.

FIG. 24 is an enlarged detail view of the retaining system of FIG. 23, showing, the free end of the customized pin, the retainer, and the lock more clearly.

FIG. 25 is a sectional view of the ripper tip and shank of FIG. 24 showing the lock, and the retainer installed in the apertures of the ripper tip as well as the mating of the lock with the pin that is installed in the apertures of the shank.

FIG. 26 is a rear oriented perspective view of the ripper tip of FIGS. 21 thru 25 removed from the ripper shank, revealing the interior apertures that hold the lock and well as the apertures that contain the customized pin (which is not shown for enhanced clarity).

FIG. 27 shows the retaining system and ripper shank of FIG. 23 with the ripper tip removed, revealing the lock of the retaining system in a locked configuration.

FIG. 28 is a side oriented perspective view of the retaining system of FIG. 27 with the lock shown in an unlocked configuration.

FIG. 29 is an alternate perspective view of the ripper shank of FIG. 21 shown in isolation, revealing the left side of the ripper shank and the counterbore hole through which the customized pin extends in use.

FIG. 30 is a perspective view of the ripper tip of FIG. 23 shown in isolation with the retaining system removed, depicting the various apertures that receive the components of the retaining system.

FIG. 31 is a perspective view of the lock of FIGS. 23 thru 28 shown in isolation.

FIG. 32 is a perspective view of the retainer of FIGS. 23 thru 28 shown in isolation. This embodiment of a retainer may be similarly or identically configured as the embodiment shown in FIG. 17 but not necessarily so.

FIG. 33 is a perspective view of the pin of FIGS. 23 thru 28 shown in isolation.

FIG. 34 is a side view of a bulldozer that may employ a retaining system according to an embodiment of the present disclosure for attaching a work tool or a wear member such as a ripper tip to a ripper shank or a cutting edge to a blade, forming a ripper assembly or a blade assembly that is attached to the machine.

FIG. 35 is a front perspective view of a blade that may be used on the machine of FIG. 34 shown in isolation. The blade may have cutting edges or other work tools or wear members attached to the blade using various embodiments of a retaining system of the present disclosure.

FIG. 36 is a front oriented perspective view of a cutting edge that is configured with a pin receiving thru-hole, a pin head receiving recess, and a ramped pry slot similar or identical to the features that are shown in FIGS. 21 thru 26.

FIG. 37 is a perspective view of a pin with an orientation feature such as a flat or an indentation, and a wing receiving slot on the peripheral surface of the shank similar to that shown in FIG. 33.

FIG. 38 shows the cutting edge of FIG. 36 inserted onto a portion of a blade before the pin has been inserted.

FIG. 39 shows the cutting edge of FIG. 38 being retained onto a portion of a blade by the pin after the pin has been inserted.

FIG. 40 is a rear oriented perspective view of the assembly of FIG. 39 with the lock, and retainer installed. The lock has been rotated into the locked configuration.

FIG. 41 shows the assembly of FIG. 40 with the cutting edge removed, revealing the lock rotated into an unlocked configuration.

FIG. 42 is an alternate embodiment of the cutting edge of FIG. 36 with the retainer, and the lock disposed on the front surface instead of the rear surface.

FIG. 43 is a front oriented perspective view of a cutting edge configured according to another embodiment of the present disclosure with a pin receiving hole.

FIG. 44 is a perspective view of yet another embodiment of a customized pin where the head includes orientation flats, and the shaft includes a notch disposed on the peripheral surface of the shaft near the head.

FIG. 45 illustrates the cutting edge of FIG. 43 with assembled into the bottom forked section of a blade portion with the lock in the unlocked configuration.

FIG. 46 depicts the pin of FIG. 44 being inserted to hold the cutting edge to the bottom forked section of the blade portion of FIG. 45.

FIG. 47 shows the lock of FIG. 46 being rotated into the locked configuration.

FIG. 48 shows the assembly of FIG. 47 with the blade portion removed, revealing the wing of the lock positioned in the notch of the pin.

FIG. 49 shows the assembly of FIG. 48 with the lock rotated into an unlocked configuration such that the wing of the lock is no longer in the notch of the pin.

Detailed Description

Reference will now be made in detail to embodiments of the disclosure, examples of which are illustrated in the accompanying drawings. Wherever possible, the same reference numbers will be used throughout the drawings to refer to the same or like parts. In some cases, a reference number will be indicated in this specification and the drawings will show the reference number followed by a letter for example, 100a, 100b or a prime indicator such as 100’, 100’’etc. It is to be understood that the use of letters or primes immediately after a reference number indicates that these features are similarly shaped and

have similar function as is often the case when geometry is mirrored about a plane of symmetry. For ease of explanation in this specification, letters or primes will often not be included herein but may be shown in the drawings to indicate duplications of features discussed within this written specification.

An adaptor board assembly that may employ a retaining system (may be referred to as a retaining assembly) using a lock, a retainer, and a bit configured according to various embodiments of the present disclosure will be discussed. Then, the retaining system itself will be described. Various replacement parts will also be discussed such as the wear member or work tool that has features to mate with the retaining system according to various embodiments of the present disclosure. Later, a ripper shank and ripper tip subassembly using a lock, a retainer, and a pin configured according to further various embodiments of the present disclosure will be discussed. The replacement parts for these embodiments may be similarly or identically configured as those for the retaining system of the adaptor board assembly in some embodiments, and vice versa.

First, a machine will now be described to give the reader the proper context for understanding how various embodiments of the present disclosure are used. It is to be understood that this description is given as exemplary and not in any limiting sense. Any embodiment of an apparatus or method described herein may be used in conjunction with any suitable machine.

Referring to FIG. 1, a machine 10 such as a motor grader is depicted. The machine 10 has a frame 12 and a ground engaging propulsion system including two sets of rear wheels 13 and a set of front wheels 14. A blade assembly 15' or board assembly 15 is mounted on a blade tilt adjustment mechanism 16 that is supported by a rotatable circle assembly 17 positioned beneath frame 12. A variety of hydraulic cylinders may be provided for controlling the position of the board assembly 15 or blade assembly 15'. A prime mover such as engine 18 provides the power necessary to propel the machine 10 as well as operate the various actuators and systems of the machine. In a hydrostatically operated machine, the engine 18 powers a hydro static pump (not

shown) which in turn drives a hydrostatic motor (not shown) to propel the machine 10. The hydro static pump may also drive other hydraulic systems of the machine. A ripper assembly 20 may be mounted at a rear section of the frame 12 of the machine 10. Although ripper assembly 20 is mounted on a motor grader, the ripper assembly may be mounted on other types of machines such as a dozer, a tractor and the like. Accordingly, this machine is provided as a non-limiting example and the applications for the retaining systems discussed herein are also provided as non-limiting examples.

As alluded to previously, an adaptor board assembly 100 may be provided that allows a work tool/wear member 200 to be attached or detached from the machine 10. The adaptor board assembly 100 may described as follows focusing on FIGS. 2 thru 10.

Starting with FIGS. 2, 3 and 5, an adaptor board assembly 100 for attaching grading bits (e.g. see reference numerals 200) to a grading machine 10 using a retaining system 102 according to an embodiment of the present disclosure can be seen. The adaptor board assembly 100 may comprise an adaptor board 104 including a top moldboard attachment portion 106, and a bottom grading bit retention portion 108. The grading bits (e.g. see 200) include a working portion/wear portion 202, and a shank 204 (see FIG. 6) extending from the wear portion/working portion. The retaining system 102 may include a lock 300 for holding the bit into place, and a retainer 400 for holding the lock 300 into the bottom grading bit retention portion 108 of the adaptor board 104. The top moldboard attachment portion 106 may define a fastener receiving aperture 120 for attaching the adaptor board 104 to the mold board. However, other forms of attachment are possible including welding, etc.

As best seen in FIGS. 6 thru 8, and 10, the bottom grading bit retention portion 108 may define a shank receiving aperture 110 defining a longitudinal axis 112, and a lock receiving aperture 114 (as best seen in FIG. 10) that is in communication with the shank receiving aperture 110, and that is disposed toward the interior of the bottom grading bit retention portion 108 of the adaptor board 104. The lock receiving aperture 114 may define an axis of

rotation 116 (see FIG. 10) that forms an angle 118 with the longitudinal axis 112 of the shank receiving aperture 110 in a plane (i.e. the sectioned plane of FIG. 10) containing the longitudinal axis 112, and the axis of rotation 116 ranging from 80 degrees to 100 degrees (e.g. approximately 90 degrees, +/- 5 degree). That is to say, the aperture may be formed with one or more surfaces of revolution (e.g. cylindrical, conical) that allow a lock to rotate therein.

With continued reference to FIG. 10, the bottom grading bit retention portion 108 may include a front face 122, and a rear face 124. A lock insertion aperture 126 may extend from the rear face 124 to the lock receiving aperture 114, allowing the lock 300 and the retainer 400 to be installed into the adaptor board 104 and held into place in a manner that will be discussed later herein before attaching the bit.

To that end, the bottom grading bit retention portion 108 may further define a retainer receiving aperture 128 that is in communication with the lock receiving aperture 114, and a lock drive portion access aperture 130 (see also FIG. 3) that extends from the front face 122 to the lock receiving aperture 114.

More particularly as seen in FIG. 10, the lock drive portion access aperture 130 defines a central axis 132 that is coincident with the axis of rotation 116, a radial direction 134, and at least one surface of revolution 136 (e.g. a conical surface, a cylindrical surface, etc.) centered about the axis of rotation 116. The retainer receiving aperture 128 may include at least one slot 138 that is radially offset from the lock drive portion access aperture 130 and is in communication therewith.

Looking now at FIGS. 7 thru 15, the lock 300 may include a drive portion 302 defining a drive recess 304, a shank locking portion 306 comprising a skirt 308, and a web 310 that connects the drive portion 302 to the skirt 308. Other configurations of these features is possible in other embodiments of the present disclosure.

As best seen in FIG. 10, the skirt 308 (may also be referred to as a rim) may extend axially from the web 310 toward the drive portion 302 (i.e. axially on the same side of the web as the drive portion), defining an annular

cavity 312 between the drive portion 302 and the skirt 308 that is configured to receive the retainer 400. In FIGS. 11 thru 15, it can be understood that at least one detent receiving aperture 314 may be disposed in the annular cavity 312. Once assembled as best seen in FIG. 10, the retainer 400 is disposed in the annular cavity 312 (see also FIGS. 27 and 28 that show the same concept with another embodiment of the retaining system).

Looking at FIG. 17, the retainer 400 may include an undulating ring portion 402 comprising at least one detent 404 that is configured to engage the at least one detent receiving aperture 314 of the lock 300. The detents have a bulge or protrusion 408 radially on one side and a flex groove 410 radially on the opposite side to allow the detents to deflect radially inwardly as the lock 300 is rotated.

A tab 406 may extend axially from the undulating ring portion 402. As seen in FIGS. 5 and 10, one or more tabs 406, 406a may be disposed in the slot(s) 138 that is radially offset from the lock drive portion access aperture 130.

The tabs may serve two functions. First, the tabs may abut the ends 142 of the slot 138 (since the slots extend less than 180 degrees about the axis of rotation), helping to prevent rotation of the retainer so that only the lock rotates to achieve the locked and unlocked configuration. Second, there may be dimensional interference between the tab, the drive portion of the lock, and the surface of revolution of the adaptor board so that the retainer and the lock are held in the adaptor board during assembly.

As best seen in FIGS. 7 thru 10, the skirt 308 of the lock 300 may extend axially from the web 310 away from the drive portion 302, forming the shank locking portion 306. Furthermore, the skirt 308 may also define at least one shank receiving aperture 311, and the shank 204 may define at least one skirt receiving notch 206 (see also FIG. 16). For the embodiment shown in these figures, there are two notches 206 and two apertures 311.

As a result as shown in FIG. 10, the shank 204 and its associated aperture 110 pass longitudinally completely through lock 300. Consequently, the

shank 204 abuts or nearly abuts a blind bottom surface 140 and is trapped along a direction parallel to the axis of rotation 116 by a ledge 142, while at the same time the working portion/wear portion 202 of the work tool/wear member 200 abuts (or nearly abuts) the bottom grading bit retention portion 108 of the adaptor board 104. Once the lock 300 is rotated into a locking configuration as depicted in FIG. 9, the skirt 308 enters both notches 206, providing a robust retention of the bit. This various features may be differently configured in other embodiments of the present disclosure. For example, only one notch may be used in a scenario where the shank does not pass longitudinally completely through the lock, etc.

Next, a retaining system 102 that may be provided as replacement kit or a repair kit will be discussed with reference to FIGS. 10 thru 15, and 17 thru 19. The retaining system may comprise a lock 300 including a drive portion 302 defining a drive recess 304, an axis of rotation 116, a radial direction 134, and a circumferential direction 316 (see FIGS 12 and 13). That is to say, the lock includes a body and/or a surface of revolution (e.g. cylindrical, conical) that allows the lock to rotate in a lock receiving aperture as previously described herein. The shank locking portion 306 may comprise a skirt 308 that is connected to the drive portion 302 by a web 310. The skirt 308 may extend axially from the web 310 toward the drive portion 302 (i.e. in the same axial direction as the drive portion) forming an annular cavity 312, defining at least one detent receiving aperture 314 that is disposed in the annular cavity 312. A retainer 400 may also be provided that is configured to fit within the annular cavity 312.

On the other hand, the skirt 308 of the lock 302 may also extend axially from the web 310 away from the drive portion 302 in the opposite direction, forming the shank locking portion 306. As alluded to earlier herein, the skirt 308 may also define at least one shank receiving aperture 311.

More specifically, FIG. 12 illustrates that the skirt 308 may include an interior wall 318 (e.g. a surface) facing radially toward the drive portion 302 of the lock 300, and the at least one detent receiving aperture 314

may be disposed on the interior wall 318. This may not be the case for other embodiments of the present disclosure. For example, the aperture 314 may be on the drive portion 302 in other embodiments. In such a case, the retainer 400 and its detents 404 would be reversed, etc.

In some embodiments of the present disclosure, the drive recess 304 may include a rectangular configuration. Other configurations are possible including other polygonal shapes, asymmetrical shapes, etc. Also, instead of a drive recess, the drive portion 302 may have other external configurations with flats to allow a socket to rotate the lock 300, etc.

As mentioned earlier herein, the retainer 400 may be disposed in the annular cavity 312. Looking at FIGS. 17 thru 19, the retainer 400 may include a wavy annular body 402a having at least one detent 404 that is configured to mate with the at least one detent receiving aperture 314. One or more tab(s) 406 may extend axially away from the wavy annular body 402a that is disposed radially adjacent to the drive portion 302 of the lock 300 as seen in FIG. 10. As shown, two such tabs that are radially aligned may be provided. Similarly, the least one detent of the retainer includes four detent protrusions 408 that project outwardly radially from the wavy annular body 402a of the retainer 400. Also, FIG. 18 shows that the retainer 400 may have two planes of symmetry 412. This may not the case in other embodiments of the present disclosure.

In FIGS. 17 thru 19, the second tab 406a may be identically configured as the first tab 406, being disposed at a 180 degree interval about the axis of rotation 116 of the lock, and the first and the second tab 406, 406a may be radially aligned with one of the four detent protrusions 408. Moreover, the wavy annular body 402a may include an interior peripheral wall 414 (e.g. a surface) defining a plurality of flex grooves 410, with one of the plurality of grooves 410 being radially aligned with one of the four detent protrusions 408, each of the flex grooves 410 extending axially completely through retainer 400. Other configurations are possible in other embodiments of the present disclosure.

In addition, the wavy annular body defines an enclosed perimeter (i.e. completely closed along a 360 degree interval about the axis of rotation), and

the first and second tab(s) define angular extents 416 measured in the circumferential direction that range from 80 degrees to 100 degrees (see FIG. 18).

Looking at FIGS. 12 thru 14, that the at least one shank receiving aperture 311 of the skirt 308 of the lock 300 may include two radially aligned shank receiving apertures 311. These apertures 311 may have a semi-circular shape or similar shape. This may not be the case for other embodiments of the present disclosure. Moreover, the detent receiving apertures 314 of the skirt 308 of the lock 300 may include four detent receiving grooves 315 that are disposed on the interior wall 318 of the skirt 308 that are spaced circumferentially about the axis of rotation 116 at ninety degree intervals. Consequently, the lock 300 may have two planes of symmetry 320 as best seen in FIG. 12.

Now, a replacement part in the form of a work tool or a wear member 200 (e.g. a grading bit) that may be provided will be described with reference to FIG. 16.

The work tool/wear member 200 may comprise a working portion/wear portion 202, and a shank 204 extending from the working portion/wear portion 202, defining a longitudinal axis 208. Also, a first lock receiving groove 207 may be provided that defines an axis of rotation 210 that is perpendicular to the longitudinal axis 208 of the shank 204.

As shown, a generic configuration is illustrated for the working portion/wear portion in the form of a rectangular cubic shape with rounded corners, but it is to be understood that this configuration may be altered to include more intricate shapes or any shape that is suitable for any purpose. Likewise, the shank includes a cylindrical configuration but other shapes are possible including those that have a polygonal cross-section, an elliptical cross-section, etc. As shown, the longitudinal axis 208 takes the form of a cylindrical axis for the embodiment shown in FIG. 16. Also, the shank 204 may further define a second lock receiving groove 212 that shares the same axis of rotation 210 as the first lock receiving groove 207. That is to say, both grooves are formed by rotating a cross-sectional shape about the axis of rotation and removing that material. The cross-sectional shape may be essentially equivalent to that of the skirt of the lock.

In such a case, the first lock receiving groove 207 and the second lock receiving groove 212 extend completely through the shank 204 about the axis of rotation 210. This may not the case for other embodiments of the present disclosure.

In some embodiments, the lock may be made for any suitably rigid material including steel, cast iron, white-iron, etc. The lock may be manufactured by casting, forging, and/or machining. Also, the retainer may be made from any suitably resilient material including spring steel, rubber, elastomer, plastic (e.g. polyurethane), etc. When plastic is employed, the retainer may be injection molded, etc.

Any of the aforementioned configurations, and materials may be altered to be different in other embodiments of the present disclosure.

Turning now to FIGS. 20 thru 33, various embodiments of a ripper assembly 20, a ripper shank and ripper tip subassembly 144, as well as the retaining system 102a used to attach the ripper tip 500 to the ripper shank 146 will now be discussed.

Starting with FIGS. 21 thru 28, a ripper shank and ripper tip subassembly 144 for attaching ripper tips 500 to a machine 10 will now be described in detail. The subassembly 144 may comprise a ripper shank 146 including a top ripper assembly attachment portion 148, and a bottom ripper tip retention portion 150. The subassembly 144 may further comprise a lock 300a, a retainer 400, and a pin 600 (that may form the retaining system 102a).

As best seen in FIGS. 25 and 27, the bottom ripper tip retention portion 150 may include a nose portion 152 defining an axis of extension 154, and a pin receiving aperture 154 extending completely through nose portion 152. The vertical direction 156 along which top ripper assembly attachment portion 148 generally extends, forms an oblique angle 158 with the bottom ripper tip retention portion. Also, a curved portion 160 may be interposed between portions 148 and 150 (see FIG. 29). As a result, the ripper shank 146 may be characterized as having an “L” or “J” shaped configuration. Other configurations are possible in other embodiments of the present disclosure. Looking at FIGS. 21 and 29, the top ripper assembly attachment portion 148 may define a shaft

receiving aperture 162 for attaching the ripper shank and ripper tip subassembly to the ripper assembly 20. Other methods of attachment are possible in other embodiments of the present disclosure.

In FIGS. 25 and 26, the ripper tip 500 may including a hollow portion 502 defining a nose portion receiving cavity 504, a pin receiving thru-hole 506 that extends completely through the hollow portion 502, and that is in communication with the nose portion receiving cavity 504. In FIG. 25, the ripper tip 500 is disposed on the nose portion 152 of the bottom ripper tip retention portion 150 of the ripper shank 146, and the pin 600 is disposed in the pin receiving thru-hole 506 of the hollow portion 502 of the ripper tip 500, as well as the pin receiving aperture 154 of the bottom ripper tip retention portion 150 of the ripper shank 146.

In FIG. 27, the pin 600 defines a free end 602, and includes a peripheral surface 604 that defines a notch 606 that is disposed adjacent to the free end 602. The peripheral surface 604 may have any suitable shape including a surface of revolution (e.g. a cylindrical surface, a conical surface), or a faceted surface (such as a when the pin includes a shaft with a polygonal cross-section). In addition, the lock 300a may include a drive portion 302, and a locking portion 306a that includes a wing 320 that is configured to fit within the notch 606, locking the pin 600 and the ripper tip 500 onto the ripper shank 146.

With continued reference to FIG. 27, the drive portion 302 defines a drive recess 304, whereas the locking portion 306a comprises an annular wall 322 including an outer peripheral surface 324. As best seen in FIG. 26, the locking portion 306a is cored out by core-out aperture 326 having a rectangular shape, forming the annular wall 322. This aperture 326 may be differently configured in other embodiments of the present disclosure or may be omitted altogether in other embodiments of the present disclosure, forming a plain wall. For the embodiments shown, the core-out aperture and the drive recess are one in the same feature. This may not be the case in other embodiments of the present disclosure. In FIGS. 26 and 27, it can be understood that the wing 320 projects from the outer peripheral surface 324.

Looking at FIG. 31, the lock 300a further comprises a rib 328 that extends along the axis of rotation from the annular wall 322 toward the drive portion 302, defining an annular cavity 312 between the drive portion 302 and the rib 328 that is configured to receive the retainer 400, and at least one detent receiving aperture 314 may be disposed in the annular cavity 312.

Focusing on FIGS. 28 and 32, the retainer 400 may be disposed in the annular cavity 312, and the retainer 400 may include an undulating ring portion 402 comprising at least one detent 404 that is configured to engage the at least one detent receiving aperture 314 of the lock 300a. Referring to FIGS. 24 and 32, one or more tabs 406, 406a (e.g. two tabs may be radially aligned) that extend axially from the undulating ring portion 402, and that is disposed in the slot 510 that is radially offset from the lock receiving aperture 508 of the tip.

Looking now at FIGS. 22 and 33, the pin 600 may have a head 608 defining an indentation 610. The ripper tip 500 may include a head receiving recess 512 (e.g. a counterbore) that is in communication with the pin receiving thru-hole 406. The head 608 of the pin 600 may disposed in the head receiving recess 512, and the ripper tip 500 further includes a protrusion 514 that is disposed in the indentation 610, helping to ensure the proper alignment of the notch 606 of the pin 600 with the wing 320 of the lock 300a so the wing may enter or exit the notch. The ripper tip 500 may further include a ramped pry slot 516 that is in communication with the head receiving recess 512 to aid in the removal of the pin. This feature may be omitted. In such a case, the pin could be hammered out the other side on the free end of the pin.

Next, a retaining system 102a that may be provided as replacement kit or a repair kit will be discussed with reference to FIGS. 26 thru 28, and 31 thru 33. The retaining system 102a may comprise a lock 300a including a drive portion 302, and defining an axis of rotation 210a, a radial direction 134a, and a circumferential direction 316a (see FIG. 28). The lock 300a may also include a locking portion 306a including an outer peripheral surface 324, and a wing 320 that extends radially outwardly from the outer peripheral surface 324 (see FIG. 31). The locking portion 306a may be connected to the

drive portion 302 by an annular wall 322. The lock 300a may further comprise a rib 328 extending axially from the annular wall 322 toward the drive portion forming an annular cavity 312, defining at least one detent receiving aperture 314 that is disposed in the annular cavity 312. A retainer 400 may be provided that is configured to fit within the annular cavity 312 (see FIG. 28).

In FIG. 31, the rib 328 may include an interior wall 318 facing radially inwardly toward the drive portion 302 of the lock 300a, and the at least one detent receiving aperture 314 may be disposed on the interior wall 318 of the rib 328. An opposite arrangement may be provided in other embodiments of the present disclosure.

The wing 320 may extend circumferentially an angular extent 330 ranging from 70 degrees to less than 90 degrees. Other configurations and angular dimensions may be used in other embodiments of the present disclosure.

The drive portion 302 may define a drive recess 304 having a rectangular configuration. Other configurations of the drive portion 302 are possible for other embodiments of the present disclosure as discussed earlier herein.

The retainer 400 may be disposed in the annular cavity 312, and may have a wavy annular body 402a having at least one detent 404 that is configured to mate with the at least one detent receiving aperture 314 of the lock 300a (see FIG. 32). One or more tabs 406, 406a may extend axially away from the wavy annular body 402a, and may be disposed radially adjacent to the drive portion 302 of the lock 300a (see FIG. 28).

Looking at FIGS. 26 and 31, the drive portion 302 may define a first axial end 332 of the lock 300a, while the locking portion 306a may define a second axial end 334. The wing 320 may be disposed at the second axial end 334 in some embodiments of the present disclosure.

As best understood with reference to FIGS. 28 and 31, the at least one detent receiving aperture 314 of the rib 328 of the lock 300a may include four detent receiving grooves 315 that are disposed on the interior wall 318 of the rib 328 that are spaced circumferentially about the axis of rotation 310a at ninety

degree intervals, and the at least one detent 404 of the retainer 400 may include four detent protrusions 408 that project outwardly radially from the wavy annular body 402a of the retainer 400. Other arrangements are possible in other embodiments of the present disclosure.

Now a replacement part such as a work tool or a wear member (e.g. a ripper tip 500) will be described with reference to FIGS. 26 and 30.

The work tool/wear member 200a may comprise a working portion/wear portion 202a, and a hollow portion 502 defining an exterior 518, and a nose portion receiving cavity 504 with a direction of assembly 520, a pin receiving thru-hole 506 that is disposed along the direction of assembly 520, and that extends completely through the hollow portion 502 along a direction 522 that is transverse (i.e. non-parallel such as perpendicular or nearly perpendicular) to the direction of assembly 520, and that is in communication with the nose portion receiving cavity 504.

The hollow portion 502 may further define a lock receiving aperture 508, defining an axis of rotation, a radial direction, and a circumferential direction (as previously described and may be the same as those of the lock 300a), and the axis of rotation 210a is transverse to the direction of assembly 520. The axis of rotation 210a may be spaced away from the direction 522 the pin receiving thru-hole 506 extends a predetermined distance 524 measured along the direction of assembly 520 (i.e. 210a and 522 are not collinear, see also FIG. 25).

The hollow portion 502 may further define a wing receiving slot 526 that is disposed in the nose portion receiving cavity 504, and that extends circumferentially and radially from the lock receiving aperture 508. A retainer receiving cavity 528 including a tab receiving slot 510 may be disposed on the exterior 518, and may extend radially and circumferentially from the lock receiving aperture 508.

The wing receiving slot 526 may define an angular extent 530 that is 180 degrees or greater, and the exterior 518 may further define a head receiving recess 512 that is in communication with the pin receiving thru-hole

506, and a ramped pry slot 516 that is in communication with the head receiving recess 512.

In some embodiments, the lock or any work member/wear member may be made for any suitably rigid material including steel, cast iron, white-iron, etc. The lock may be manufactured by casting, forging, and/or machining. Also, the retainer may be made from any suitably resilient material including spring steel, rubber, elastomer, plastic (e.g. polyurethane), etc. When plastic is employed, the retainer may be injection molded, etc.

Any of the aforementioned configurations, dimensions, and materials may be altered to be different in other embodiments of the present disclosure.

As mentioned earlier herein, various machines in addition to a motor grader may use retaining systems according to various embodiments of the present disclosure. For example, FIG. 34 discloses such a machine in the form of a bulldozer.

As can be seen in FIG. 34, the machine 10a may be powered by a power source 18a (e.g. an engine), moved by a tracked undercarriage 13a, and include a work implement such as blade assembly 15a that may have working edges attached to it in a manner similar to what has been described in FIGS. 3 thru 19, and/or a ripper assembly 20a that may have ripper tips attached to it in a manner similar to what has been described herein with reference to FIGS. 20 thru 33. Other industrial applications are further contemplated herein.

Now, a blade assembly having a retention system for attaching cutting edges to a machine such as shown in FIG. 34 will be described with reference to FIGS. 35 thru 42.

In FIG. 40, the blade assembly 700 may comprise a blade portion 702, a lock 300a, a retainer 400, and a pin 600a. The lock, the retainer, and the pin may be constructed as previously described herein or may have some modifications.

The blade portion 702 may include a lip 704 defining a direction of assembly 706, and a pin receiving aperture 708 extending completely through

lip along a direction that is transverse (i.e. not parallel, e.g. perpendicular or nearly perpendicular) to the direction of assembly 706. The blade portion 702 may further include a support rib 710 that is configured to support the cutting edge along the direction of assembly 706, providing a space 712 in the lip receiving slot 714 of the cutting edge 716.

The cutting edge 716 may include a working portion 718 and an attachment portion 720 that has a front leg 722, and a rear leg 724 that are spaced away from each other, forming the lip receiving slot 714 therebetween. A pin receiving thru-hole 726 may extend completely through the attachment portion 720, and that is in communication with the lip receiving slot 714. The cutting edge 716 may be disposed on the lip 704 of the blade portion 702, while the pin 600a may be disposed in the pin receiving thru-hole 726 of the attachment portion 720 of the cutting edge 716, and the pin receiving aperture 708 of the lip 704 of the blade portion 702 (see FIG. 41).

Turning to FIGS. 36, 37, and 40, it can be understood that the pin 600a defines a free end 602a, and includes a peripheral surface 604a that defines a notch 606. Also, the cutting edge 716 includes a lock receiving aperture 728 (may be similarly or identically configured as the lock receiving aperture of FIGS. 25 and 26) in the attachment portion 720 that defines an axis of rotation 730, a radial direction 732, and a circumferential direction 734.

As best understood with reference to FIG. 31, the lock 300a includes a drive portion 302, and a locking portion 306a that includes a wing 320 that is configured to fit within the notch 606. To that end, the notch and the wing may have matching concave and convex arcuate surfaces to allow the wing to move within the notch as the lock is rotated.

Referring back to FIG. 40, it can be seen that the cutting edge 716 further includes a slot 736 that is radially offset from the lock receiving aperture 728, and the retainer 400 is disposed in the annular cavity 312 (see FIG. 41).

In FIG. 32, the retainer 400 includes an undulating ring portion 402 comprising at least one detent 404 that is configured to engage the at least one detent receiving aperture 314 of the lock 300a (se FIG. 41), and a tab 406

that extends axially from the undulating ring portion 402, and that is disposed in the slot 736 (see FIG. 40) that is radially offset from the lock receiving aperture 728.

Looking at FIGS. 37 and 39 together, the pin 600a may include a head 608a defining an indentation 610a. The cutting edge 716 may include a head receiving recess 738 that is in communication with the pin receiving thru-hole 726 (see also FIG. 38). As seen in FIG. 39, the head 608a may be disposed in the head receiving recess 738, and the cutting edge 716 may further include a protrusion 740 that engages the indentation 610a. The cutting edge 716 may further include a ramped pry slot 742 that is in communication with the head receiving recess 738 (but not necessarily so).

A retaining system 102b that is similarly or identically configured as that of FIGS. 26 thru 28, and 31 thru 34 may also be provided for and used with the blade assembly 700 as a replace part or kit, etc. This retaining system 102b may further comprising a pin 600a including a shaft 612a defining a notch 606 that is configured to receive the wing 320 of the lock 300a (see FIGS. 37 and 41). To that end, the notch 606 may have a concave arcuate surface 614 on its circumference that is able to match (with some slight clearance) and receive a convex arcuate surface 321 on the circumference of the wing 320, allowing the lock 300a to rotate until the wing 320 fully extends through the notch 606 (similar to what is shown in FIG. 27).

Next, a work tool or a wear member (such as a cutting edge 716, a shroud, etc.) that may be provided or used as a replacement part will now be discussed with reference to FIGS. 36, 38 thru 40, and 42. The cutting edge 716 may include a working portion/wear portion 202b, and an attachment portion 720 including a front leg 722, a rear leg 724, and defining a lip receiving slot 714 therebetween, and a direction of assembly 706.

Either the front leg 722 or the rear leg 724 may define a pin receiving thru-hole 726, a retainer receiving cavity 744, and a lock receiving aperture 728. The pin receiving thru-hole 726 may define a longitudinal axis 746, and the lock receiving aperture 728 may define an axis of rotation 748, a

radial direction 750, and a circumferential direction 752 (see FIG. 41). The axis of rotation 748 is spaced away from the longitudinal axis 746 a predetermined dimension 754 measured along a direction that is perpendicular to the longitudinal axis 746 (i.e. there is no overlap between the pin receiving thru hole and the lock receiving aperture).

As shown by the dotted lines in FIG. 41 and understood by looking at FIG. 26 due to the similar or identical construction, the attachment portion 720 may further define a wing receiving slot 756 that is in communication with the lock receiving aperture 728, and that extends circumferentially and radially from the lock receiving aperture 728. In FIG. 42, the retainer receiving cavity 744 may include a tab receiving slot 736 that extends radially and circumferentially from the lock receiving aperture 728. The tab receiving slot 736 may define an angular extent 760 circumferentially that ranges from 80 degrees to 100 degrees (e.g. about 90 degrees). Other configurations and dimensions are possible in other embodiments of the present disclosure.

Similarly, the wing receiving slot 756 may also define an angular extent (similar or identical to angular extent 526 shown in FIG. 26) circumferentially that is 180 degrees or greater (e.g. must at least be greater than the angular extent of the wing). FIG. 42, shows a head receiving recess 764 that is in communication with the pin receiving thru-hole 726 (see also FIG. 38) and an exterior of the cutting edge 716, as well as a ramped pry slot 742 that is in communication with the head receiving recess 764 on the exterior may also be provided.

As shown in FIG. 42, the head receiving recess 764, the ramped pry slot 742, and the tab receiving slot 736 may be disposed on the front leg 722 of the attachment portion 720 of the cutting edge 716, but not necessarily so.

An alternate embodiment of a blade assembly 700a that may use a retention system for attaching cutting edges to a machine will now be discussed looking at FIGS.43 thru 49.

Starting with FIGS. 46 and 47, the blade assembly 700a may comprise a blade portion 702a, a lock 300a, a retainer 400, and a pin 600b.

The blade portion 702a may include a bottom forked section 766 including a front prong 768, a rear prong 770, and defining a cutting edge receiving slot 772 therebetween. This slot defines a direction of assembly 774. A pin receiving thru-hole 726a, and a lock receiving aperture 728b are also provided. The pin receiving thru-hole 726a extends completely through the bottom forked section 726 in a direction that is transverse (i.e. not parallel, e.g. perpendicular or nearly perpendicular) to the direction of assembly 774. The blade portion 702a may further include an upper straight section 780 that extends upwardly from the bottom forked section 766. The body of the cutting edge 716a may jog to form a "Z" shape or a "S" shape (see also FIG. 43), but not necessarily so (e.g. may be straight).

Moreover as best seen in FIG. 43, a cutting edge 716a including a working portion 202c, and an attachment portion 776 defining a pin receiving aperture 778 that is configured to be aligned with the pin receiving thru-hole 726a of the blade portion 702a. The pin 600b may be disposed in the pin receiving thru-hole 726a, and the pin receiving aperture 778 as represented by FIGS. 46 and 47.

Focusing on FIG. 44, the pin 600b defines a free end 602b, and includes a peripheral surface 604 that defines a notch 606 as previously described herein. The pin 600b includes a head 608b defining a flat 616, and the bottom forked section 766 includes a head receiving recess 738 (see FIG. 45) that is in communication with the pin receiving thru-hole 726a. In FIG. 47, the head 608b is disposed in the head receiving recess 738a, and the bottom forked section 766 further includes a matching flat 740a that engages the flat 616. The bottom forked section 766 further includes a ramped pry slot 742a that is in communication with the head receiving recess 738a.

Looking back at FIGS. 17 thru 19, a retainer that may be provided separately as a replacement part, etc. will now be discussed in the detail.

The retainer 400 may include a wavy annular body 402a defining a central axis 417 (e.g. a conical axis, a cylindrical axis, etc.), and including at

least one detent 404, and a tab 406 that extends axially away from the wavy annular body 402a.

In addition, the wavy annular body 402a may define an enclosed perimeter (i.e. a 360 degree perimeter about the central axis 417), a radial direction 418, and a circumferential direction 420. The body 402a may also have a consistent radial thickness 422 (i.e. +/- 10% variance from a nominal thickness), and the tab 406 may define an angular extent 416 circumferentially that is less than 180 degrees. In particular embodiments, this angular extend 416 may range from 80 degrees to 100 degrees. Other dimensional values are possible in other embodiments of the present disclosure.

The at least one detent 404 may include four detent protrusions 408 that project radially outwardly at ninety degree intervals about the central axis 417, and one of the four detent protrusions 408 may be radially aligned with the tab 406. This may not be the case for other embodiments of the present disclosure.

The retainer 400 may define two radially extending planes of symmetry 412 that are perpendicular to each other, but not necessarily so.

Next, various embodiments of a pin that may be provided as a replacement part, etc. will now be described with reference to FIGS. 33, 37, and 44.

Such a pin 600, 600a, and 600b includes a head 608, 608a, 608b defining a head dimension 618 (e.g. a head diameter), 618a (e.g. a head diameter), 618b (e.g. a head width measured along a direction perpendicular to the shaft axis), and a shaft 612, extending from the head 608, 608a, 608b. The shaft may define a peripheral surface 604, and a shaft diameter 620 that is less than head dimension 618, 618a, 618b. The peripheral surface 604 (e.g. a surface of revolution such as a cylindrical surface, a conical surface, etc.) may define a notch 606, and the head 608, 608a, 608b may include a perimetric surface 622, 622a, 622b including an orientation feature 624.

The orientation feature 624 includes at least one of the following: a flat 616, an indentation 610, 610a, and a protrusion (e.g. such as shown on the

various wear members/working members). The notch 606 may include a concave arcuate surface 614 has previously described herein.

The shaft 612, 612a, 612b may define a shaft axis 626 (e.g. a cylindrical axis, a longitudinal axis, etc.), and a free end 602, 602a, 602b disposed along the shaft axis 626. The notch 606 may be disposed along the shaft axis 626 near the free end 602, 602a, 602b or near the head 608, 608a, 608b depending on the application.

A blade member that may be provided as a replacement part, etc. will now be discussed with reference to FIG. 45.

The blade member 702b may comprise an upper straight section 780, and a bottom forked section 766 including a front prong 768, a rear prong 770 that are spaced apart from each other, defining a cutting edge receiving slot 772 therebetween, and a direction of assembly 774.

Either the front prong 768 or the rear prong 770, or both defines a pin receiving thru-hole 726b, a retainer receiving cavity 744, and a lock receiving aperture 728b. The pin receiving thru-hole 726b may define a longitudinal axis 746, and the lock receiving aperture 728b may define an axis of rotation 748, a radial direction 750, and a circumferential direction 752 (see also FIG. 47). The axis of rotation 748 may be parallel to the longitudinal axis 746, and may be spaced away from the longitudinal axis 746 a predetermined minimum distance 782.

As previously described with reference to other embodiments herein, the bottom forked section may further define a wing receiving slot that is in communication with the lock receiving aperture, and that extends circumferentially and radially from the lock receiving aperture, and the retainer receiving cavity includes a tab receiving slot that extends radially and circumferentially from the lock receiving aperture, the tab receiving slot defining an angular extent circumferentially that ranges from 80 degrees to 100 degrees.

Any of the aforementioned configurations, dimensions, and materials may be altered to be different in other embodiments of the present disclosure.

Industrial Applicability

In practice, an adaptor board assembly, a ripper shank and ripper tip subassembly, a blade assembly, a retaining system, a lock, a retainer, a work tool/wear member, an adaptor board, a ripper shank, a pin, etc. may be manufactured, bought, assembled, or sold to retrofit an existing machine or adaptor board assembly, ripper shank and ripper tip subassembly, blade assembly, etc. in the field or be supplied as a replacement part. In other situations, these items may be supplied or obtained when a machine or an assembly is originally bought from the OEM (original equipment manufacturer), etc.

The adaptor board assembly may be assembled by first inserting the retainer into the annular cavity of the lock to form a subassembly. Then, both the lock and retainer are inserted into the appropriate apertures of the adaptor board assembly to hold them in adaptor board assembly so that these components do not unintentionally fall out. Undercuts or dimensional interferences may be provided between the retainer, the lock, and the adaptor board to achieve this result.

Once installed, a square driver or the like may be used to rotate the lock into an unlocked configuration. Then, the work tool/wear member may inserted into the adapter board with this shank passing at least partially through the lock. This step may continue until the shank is seated within the adaptor board. The angular orientation of the shank must be such that the notches are facing toward the lock. The assembly may be fool proofed (poka-yoke) by using a key/key way interface or providing cross-sectional shape of the shank that is not capable of being inserted in different angular orientations (e.g. a trapezoidal cross-section) may be employed, etc.

Next, the lock may be rotated until the lock engages the shank (e.g. by the skirt passing through the notches disposed on the shank). Now, the work tool/wear member is securely attached to the adaptor board.

The work tool/wear member as well as the lock and retainer may be disassembled by reversing one or more of these steps.

The disclosed embodiments of the retaining system allow a square drive to be used that is frequently available in the field, while also allowing the thickness of the bottom portion of the adaptor board along the axis of rotation as seen in FIG. 10 to minimized, reducing the necessary material and the associated cost.

The ripper shank and ripper tip subassembly may be assembled by first assembling the retainer and the lock into the ripper tip. Then, the lock is placed into an unlocked configuration if it is not already. Next, the ripper tip, lock and retainer are inserted over the nose of the ripper shank. After that, the pin is installed with the proper angular orientation so that its notch is able to receive the wing of the lock as previously described herein. Then, the lock is rotated using a square driver into the locked configuration with the wing placed in the notch of the pin. The ripper tip is now secured to the ripper shank.

Disassembly may be effectuated by reversing these steps. To remove the pin, either the free end of the pin may be hammer out or the head of the pin may be pried out as previously alluded to herein.

The blade assembly of FIGS. 35 thru 42 may be assembled by first assembling the retainer and the lock into the cutting edge. Then, the lock is placed into an unlocked configuration if it is not already. Next, the cutting edge, lock and retainer are inserted over the lip of the blade. After that, the pin is installed with the proper angular orientation so that its notch is able to receive the wing of the lock as previously described herein. Then, the lock is rotated using a square driver into the locked configuration with the wing placed in the notch of the pin. The cutting edge is now secured to the blade.

Disassembly may be effectuated by reversing these steps. To remove the pin, either the free end of the pin may be hammer out or the head of the pin may be pried out as previously alluded to herein.

The blade assembly of FIGS. 43 thru 49 may be assembled by first assembling the retainer and the lock into the blade member. Then, the lock is placed into an unlocked configuration if it is not already. Next, the cutting edge is inserted into the bottom forked section of the blade member. After that, the pin

is installed with the proper angular orientation so that its notch is able to receive the wing of the lock as previously described herein. Then, the lock is rotated using a square driver into the locked configuration with the wing placed in the notch of the pin. The cutting edge is now secured to the blade member.

Disassembly may be effectuated by reversing these steps. To remove the pin, either the free end of the pin may be hammer out or the head of the pin may be pried out as previously alluded to herein.

It will be appreciated that the foregoing description provides examples of the disclosed assembly and technique. However, it is contemplated that other implementations of the disclosure may differ in detail from the foregoing examples. All references to the disclosure or examples thereof are intended to reference the particular example being discussed at that point and are not intended to imply any limitation as to the scope of the disclosure more generally. All language of distinction and disparagement with respect to certain features is intended to indicate a lack of preference for those features, but not to exclude such from the scope of the disclosure entirely unless otherwise indicated.

Recitation of ranges of values herein are merely intended to serve as a shorthand method of referring individually to each separate value falling within the range, unless otherwise indicated herein, and each separate value is incorporated into the specification as if it were individually recited herein.

It will be apparent to those skilled in the art that various modifications and variations can be made to the embodiments of the apparatus and methods of assembly as discussed herein without departing from the scope or spirit of the invention(s). Other embodiments of this disclosure will be apparent to those skilled in the art from consideration of the specification and practice of the various embodiments disclosed herein. For example, some of the equipment may be constructed and function differently than what has been described herein and certain steps of any method may be omitted, performed in an order that is different than what has been specifically mentioned or in some cases performed simultaneously or in sub-steps. Furthermore, variations or modifications to certain aspects or features of various embodiments may be made to create further

embodiments and features and aspects of various embodiments may be added to or substituted for other features or aspects of other embodiments in order to provide still further embodiments.

Accordingly, this disclosure includes all modifications and equivalents of the subject matter recited in the claims appended hereto as permitted by applicable law. Moreover, any combination of the above-described elements in all possible variations thereof is encompassed by the disclosure unless otherwise indicated herein or otherwise clearly contradicted by context.

Claims

1. A retaining system (102a) comprising:

a lock (300a) including a drive portion (302), that defines an axis of rotation (210a), a radial direction (134a), and a circumferential direction (316a), and further including a locking portion (306a) including an outer peripheral surface, and a wing (320) that extends radially outwardly from the outer peripheral surface, the locking portion (306a) is connected to the drive portion (302) by a wall (322), and further comprising a rib (328) extending axially from the wall (322) toward the drive portion (302) forming an annular cavity (312), defining at least one detent receiving aperture (314) that is disposed in the annular cavity (312).

2. The retaining system (102a) of claim 1 wherein the rib (318) includes an interior wall (318) facing radially inwardly toward the drive portion (302) of the lock (300a), and the at least one detent receiving aperture (314) is disposed on the interior wall (318) of the rib (318).

3. The retaining system (102a) of claim 2 wherein the wing (320) extends circumferentially an angular extent (330) ranging from 70 degrees to less than 90 degrees.

4. The retaining system (102a) of claim 1 wherein the drive portion (302) defines a drive recess (304) having a rectangular configuration.

5. The retaining system (102a) of claim 3 further comprising a retainer (400) that is disposed in the annular cavity (312), and includes a wavy annular body (402a) having at least one detent (404) that is configured to mate with the at least one detent receiving aperture (314), and a first tab (406) that extends axially away from the wavy annular body (402a), that is disposed radially adjacent to the drive portion (302) of the lock (300a).

6. The retaining system (102a) of claim 5 wherein the drive portion (302) defines a first axial end (332) of the lock (300a), the locking portion (306a) defines a second axial end (334), and the wing (320) is disposed at the second axial end (334).

7. The retaining system (102a) of claim 6 wherein the at least one detent receiving apertures (314) of the rib (328) of the lock (300a) includes four detent receiving grooves (315) that are disposed on the interior wall (318) of the rib (328) spaced circumferentially about the axis of rotation (210a) at ninety degree intervals, and that at least one detent (404) of the retainer (400) includes four detent protrusions (408) that project outwardly radially from the wavy annular body (402a) of the retainer (400); and

further comprising a second tab (406) that is identically configured as the first tab (406), being disposed at a 180 degree interval about the axis of rotation (210a), and the first and the second tabs (406) are radially aligned with one of the four detent protrusions (408);

the wavy annular body (402a) includes an interior peripheral wall (414), defining a plurality of flex grooves (410), with one of the plurality of flex grooves (410) radially aligned with one of the four detent protrusions (408), each of the flex grooves (410) extending axially completely through retainer (400); and

the wavy annular body (402a) defines an enclosed perimeter, and the first and the second tabs (406, 406a) define angular extents (416) measured in the circumferential direction (316a) that range from 80 degrees to 100 degrees.

8. A work tool or a wear member (200a) comprising:

a working portion or a wear portion (202a); and

a hollow portion (502) defining an exterior (518), and a nose portion receiving cavity (504) with a direction of assembly (520), a pin receiving thru-hole (506) that is disposed along the direction of assembly (520) and that extends completely through the hollow portion (502) along a direction (522) that

is transverse to the direction of assembly (520), and that is in communication with the nose portion receiving cavity (504);

wherein the hollow portion (502) further defines a lock receiving aperture (508) defining an axis of rotation (210a), a radial direction (134a), and a circumferential direction (316a), and the axis of rotation (210a) is transverse to the direction of assembly (520), and the axis of rotation (210a) is spaced away from the direction (522) the pin receiving thru-hole (506) extends a predetermined distance (524) measured along the direction of assembly (520).

9. The work tool or the wear member (200a) of claim 8 wherein the hollow portion (502) further defines a wing receiving slot (526) that is disposed in the nose portion receiving cavity (504), and that extends circumferentially and radially from the lock receiving aperture (508), and a retainer receiving cavity (528) including a tab receiving slot (510) that is disposed on the exterior (518), and that extends radially and circumferentially from the lock receiving aperture (508).

10. The work tool or wear member (200a) of claim 9 wherein the wing receiving slot (526) defines an angular extent (530) that is 180 degrees or greater, and the exterior (518) further defines a head receiving recess (512) that is in communication with the pin receiving thru-hole (506), and a ramped pry slot (516) that is in communication with the head receiving recess (512).

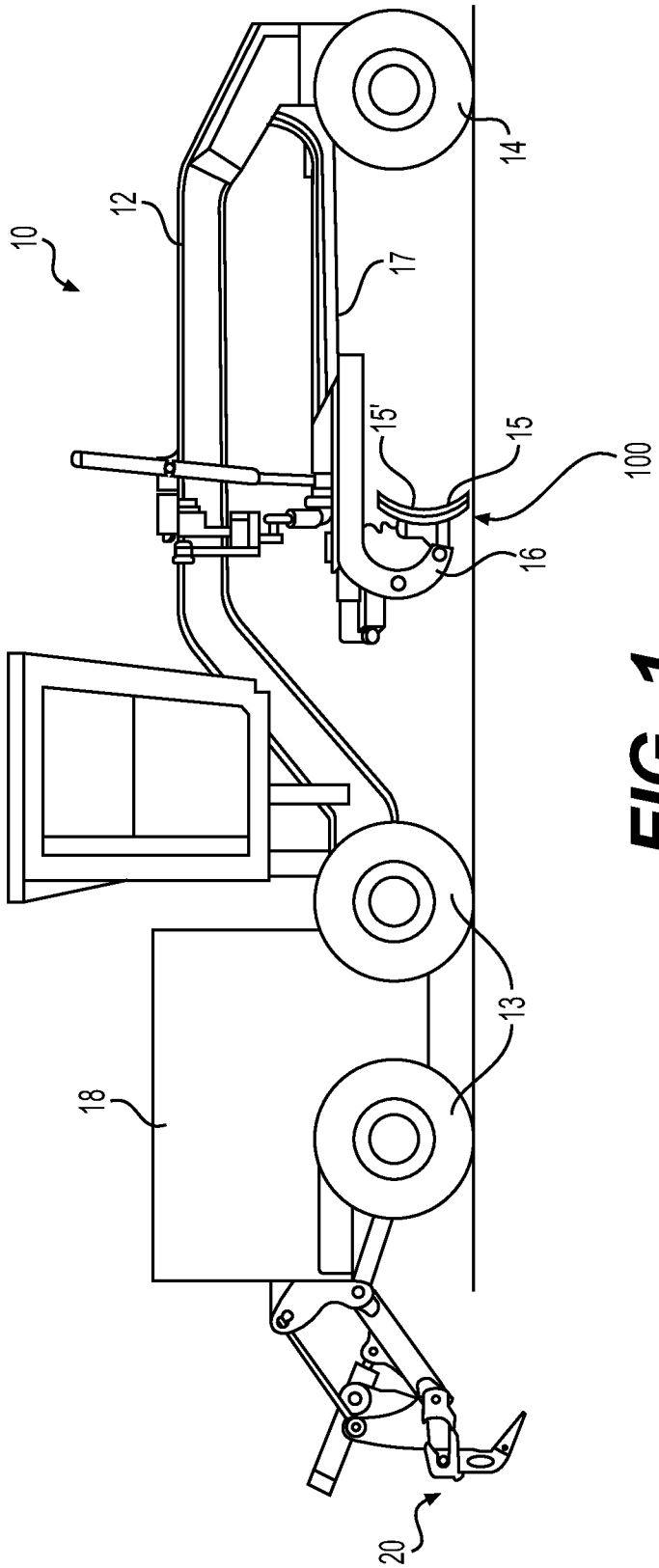

FIG. 1

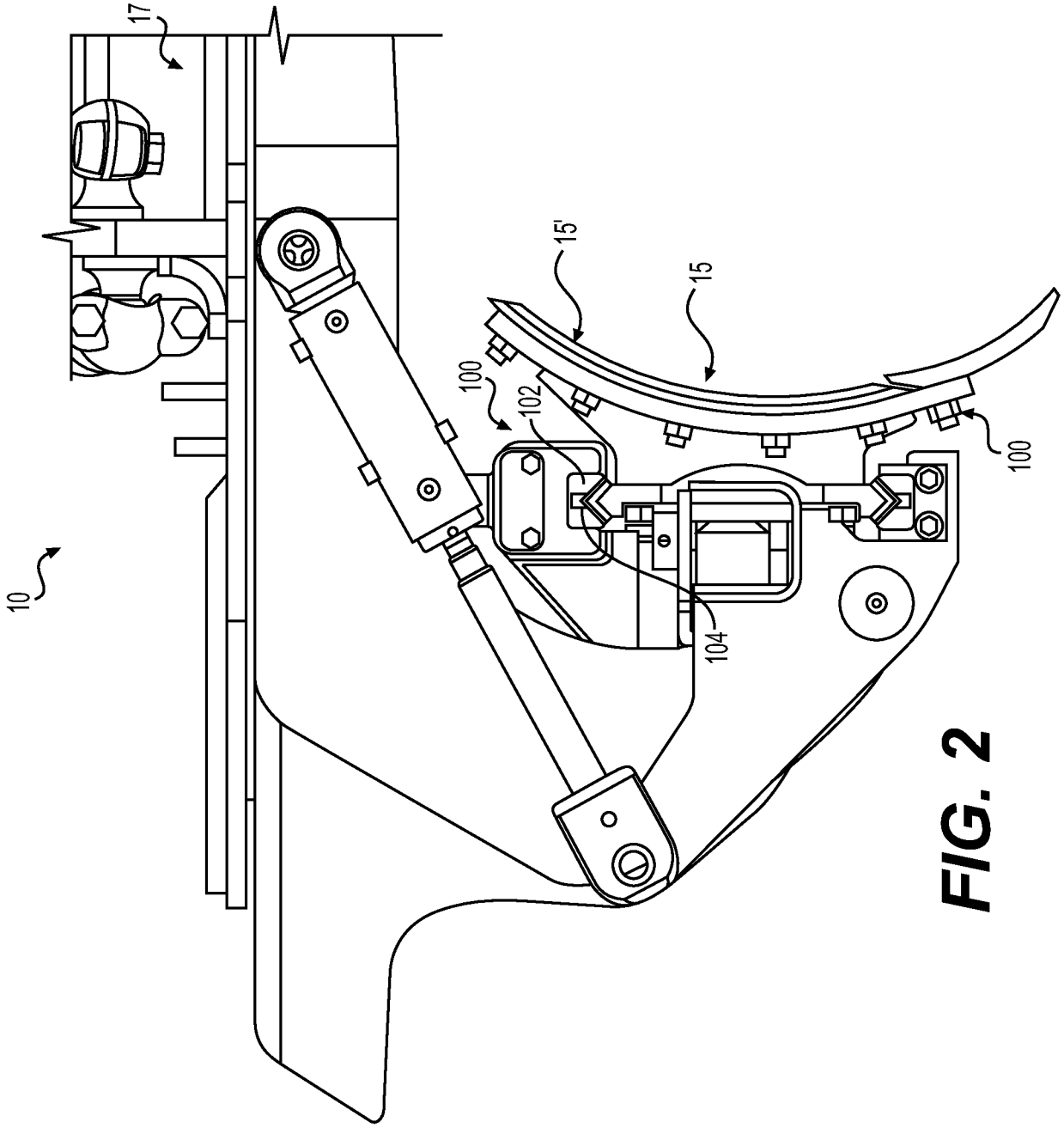

FIG. 2

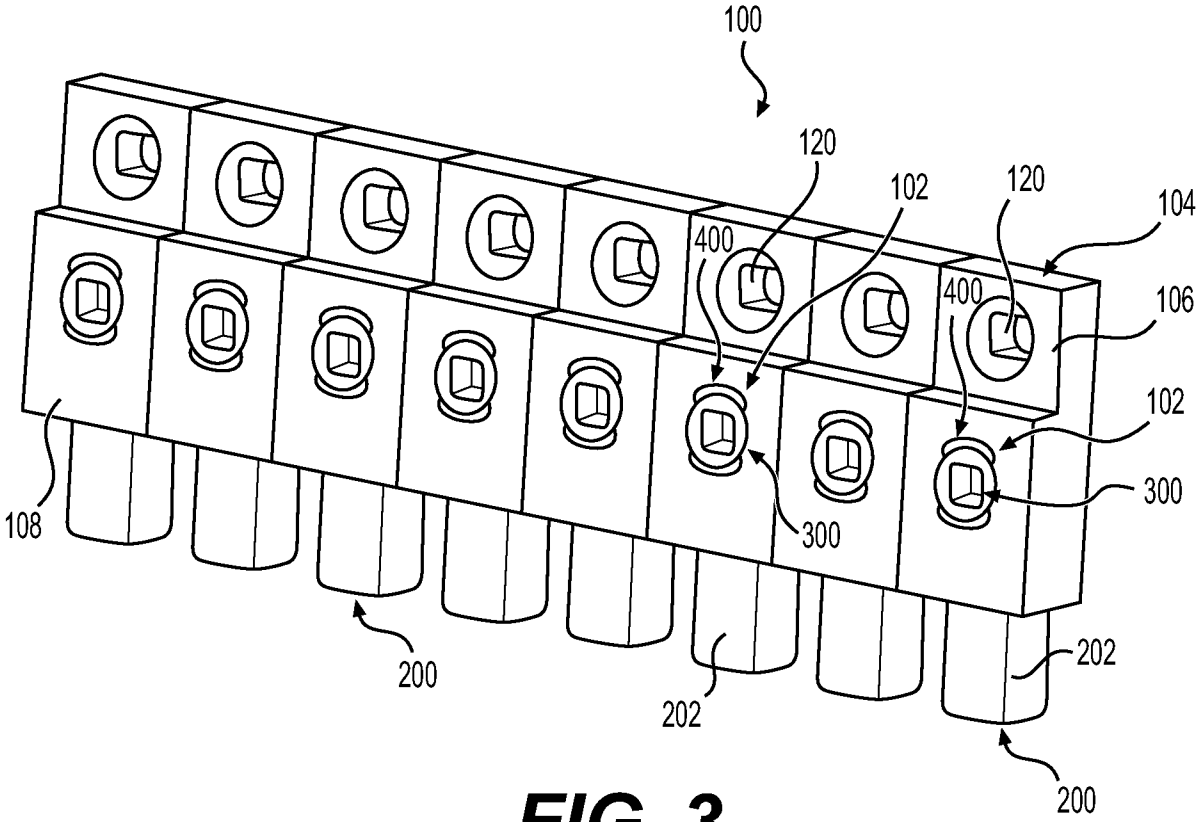
100
120
102
120
104
400
400
106
102
300
300
108
200
202
202
200

FIG. 3

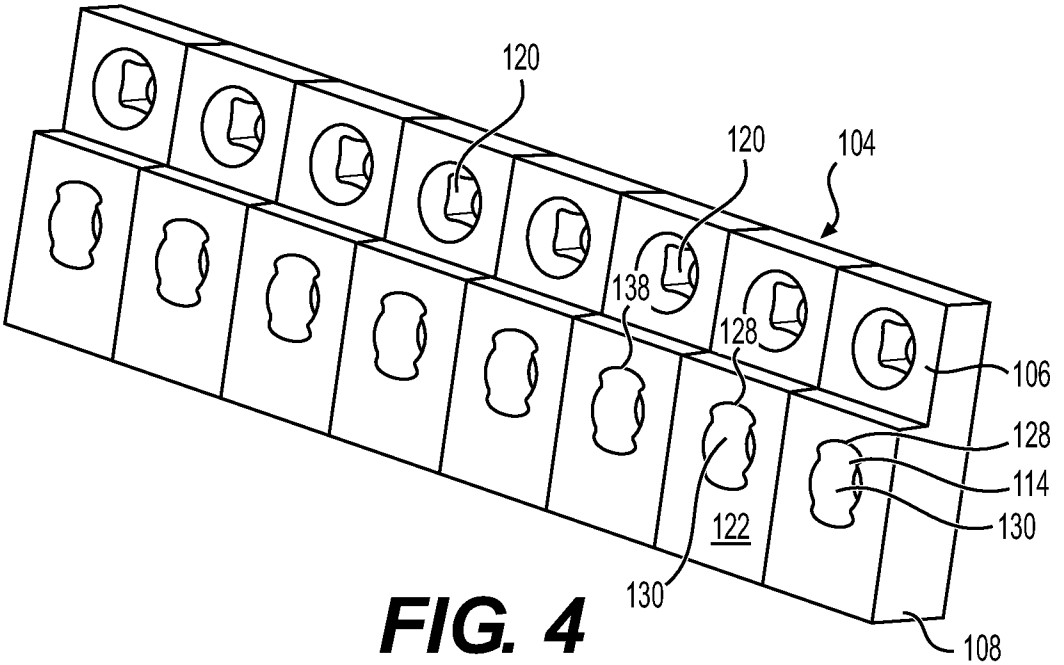
120
120
104
138
128
106
128
114
130
122
130
108

FIG. 4

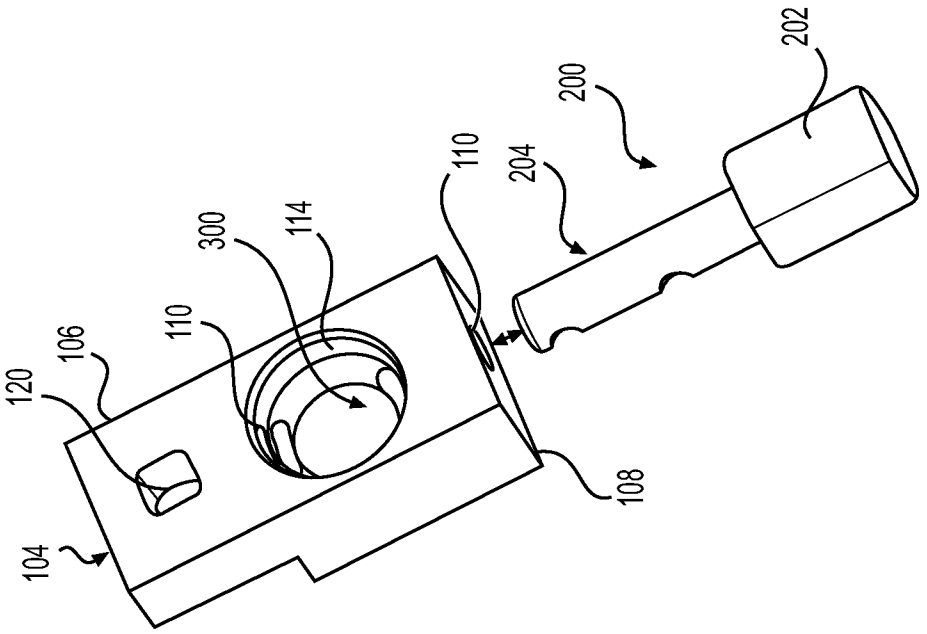
104
120
106
110
300
114
110
204
200
202
108

FIG. 6

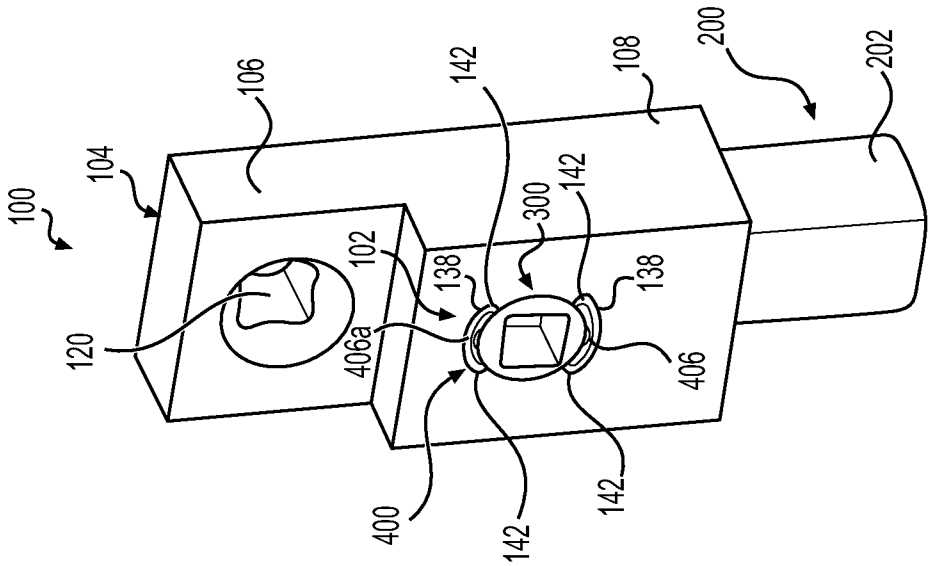
100
104
106
142
108
200
202
300
142
102
138
138
120
406a
406
400
142
142

FIG. 5

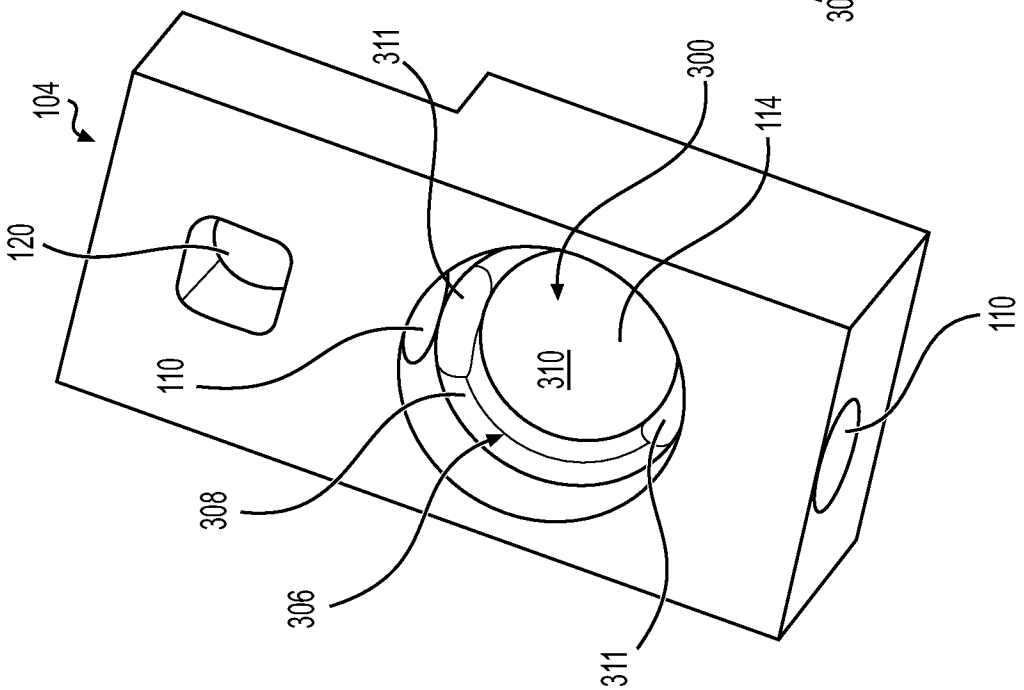
104
120
110
114
300
310
306
311
308
110

FIG. 8

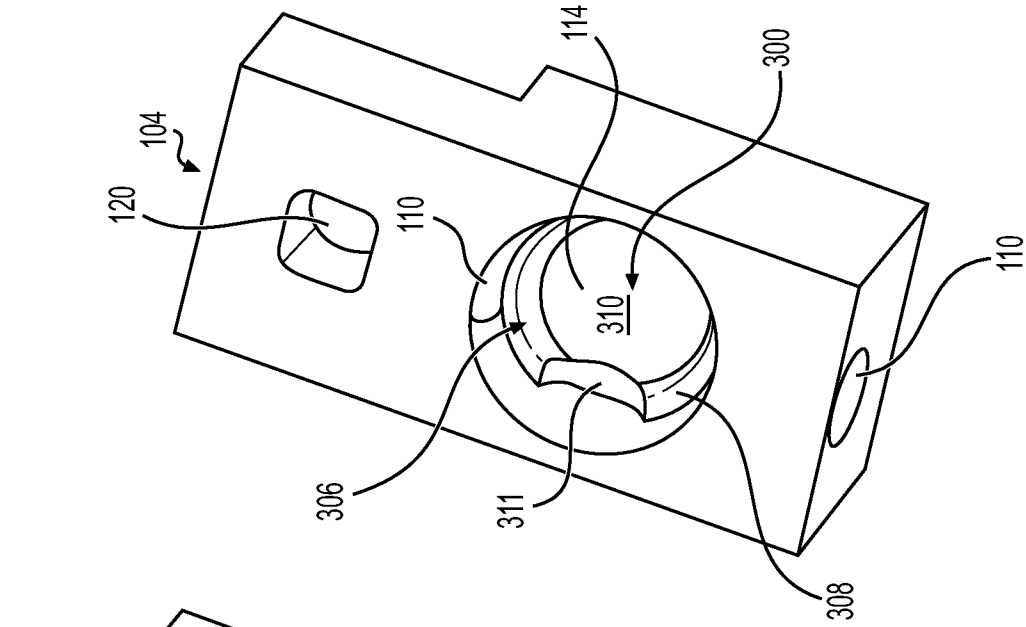
104
120
110
311
300
114
310
308
306
311
110

FIG. 7

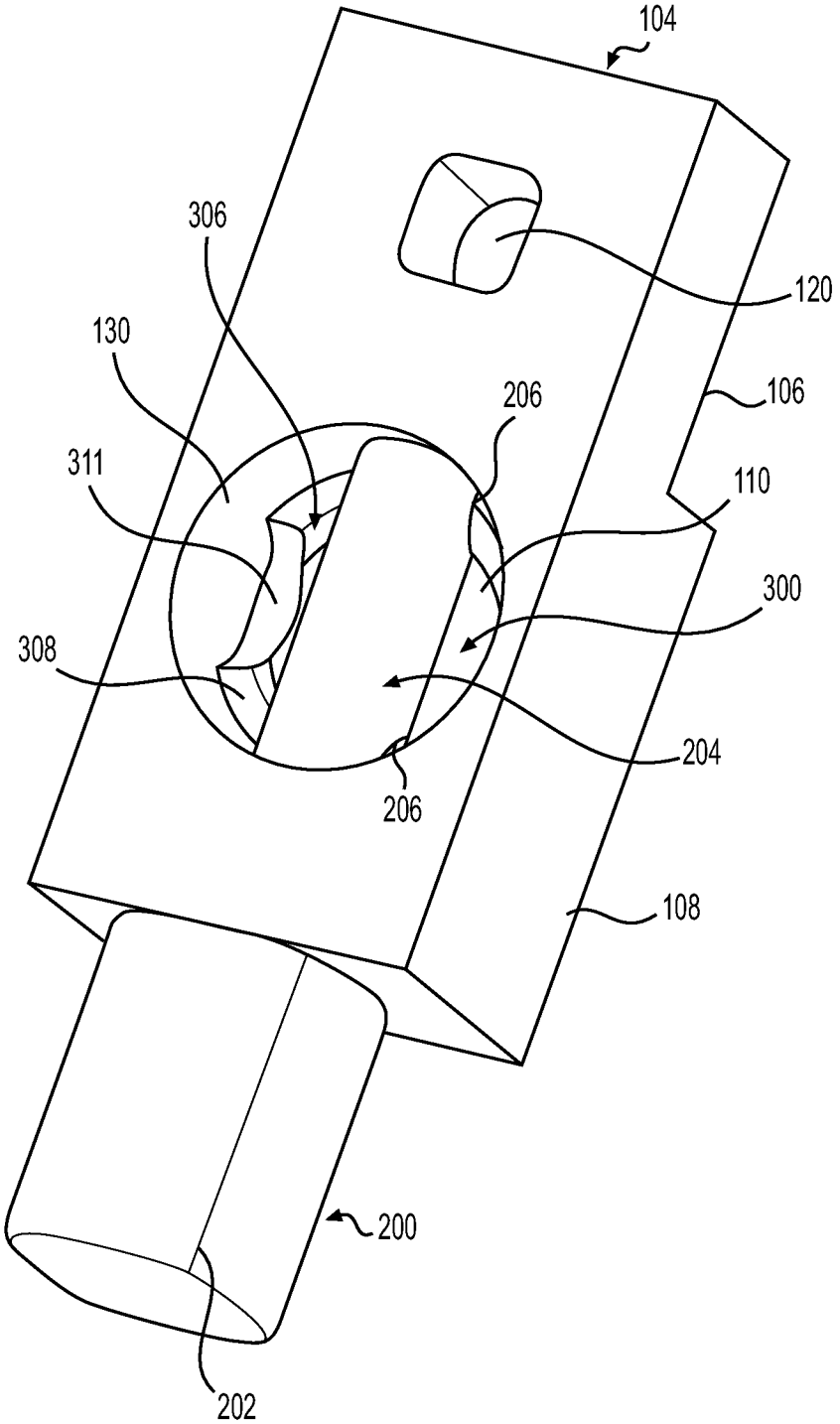

FIG. 9

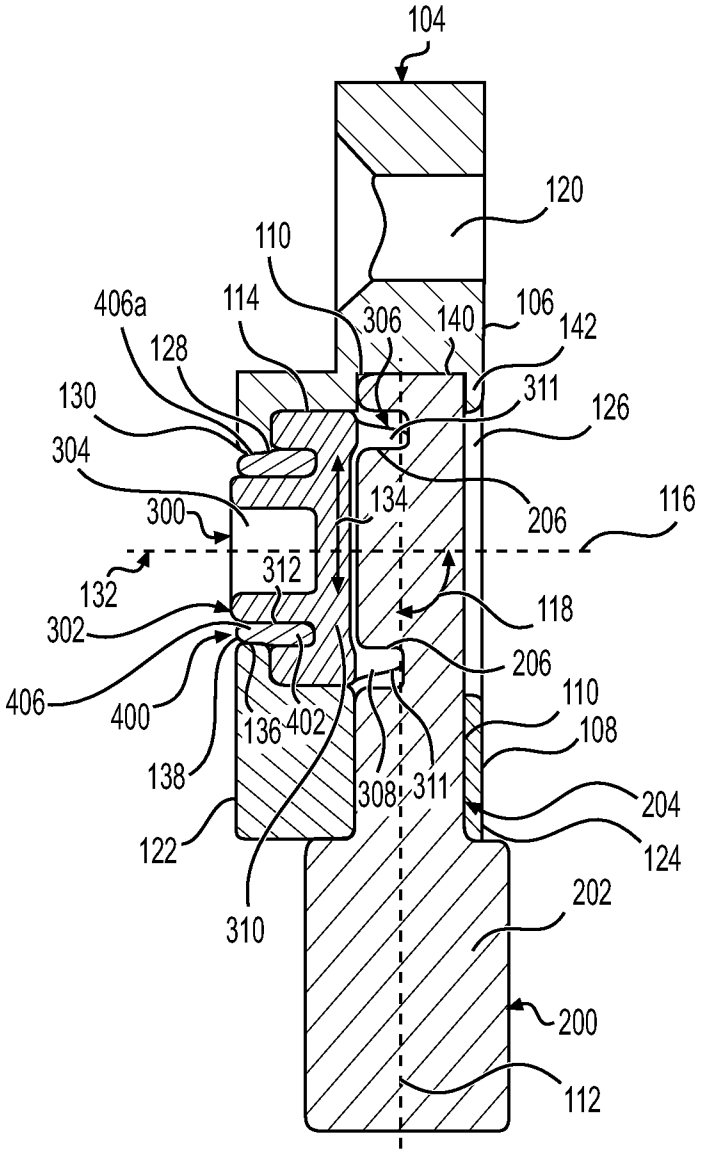
104
120
110
406a
114
306
140
106
142
128
311
130
126
304
134
206
116
300
312
132
118
302
206
406
400
136
402
110
108
138
308
311
204
122
124
310
202
200
112

FIG. 10

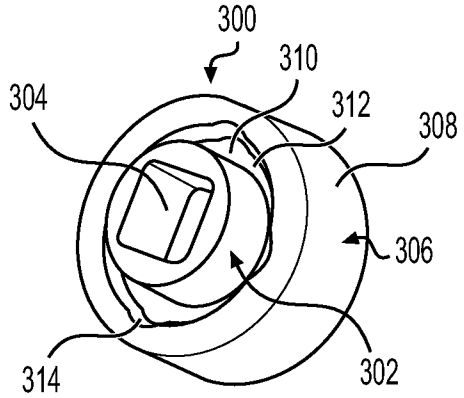
300
310
304
312
308
306
314
302

FIG. 11

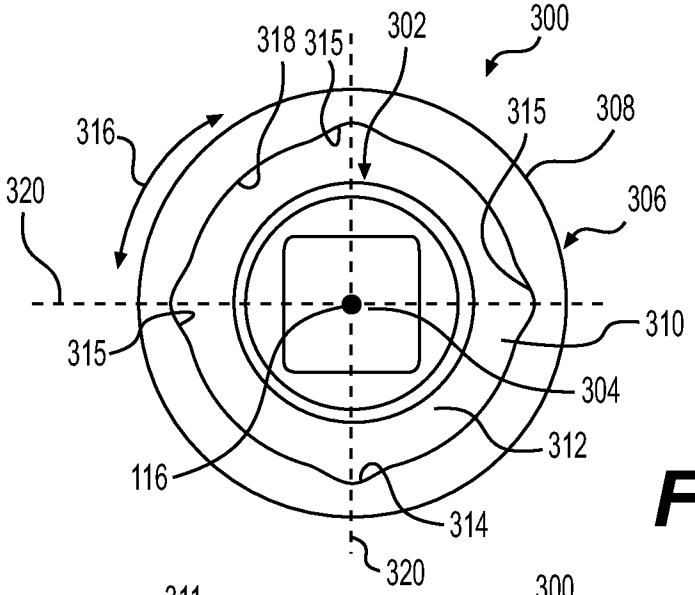

FIG. 12

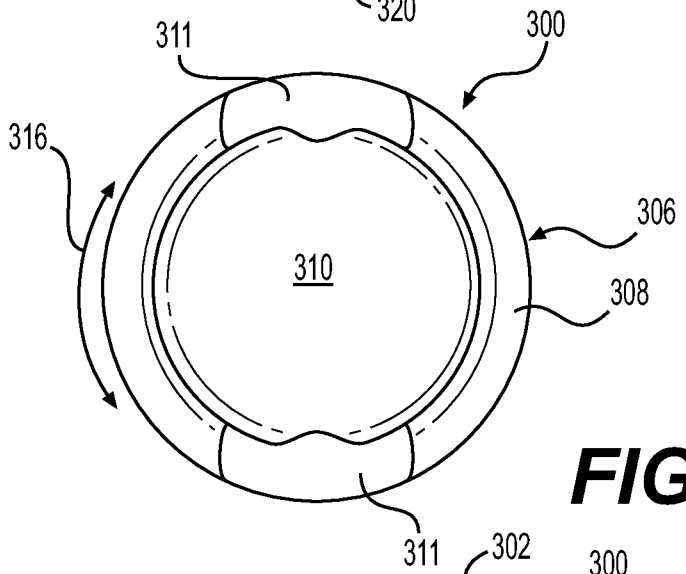

FIG. 13

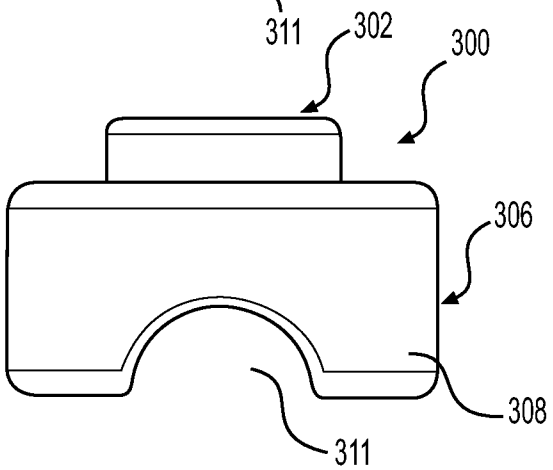

FIG. 14

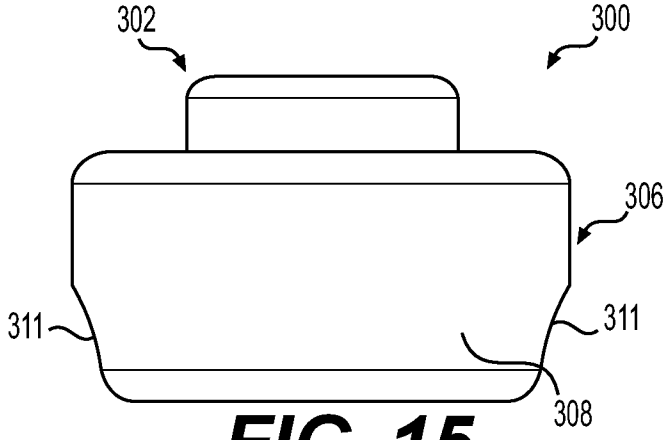

FIG. 15

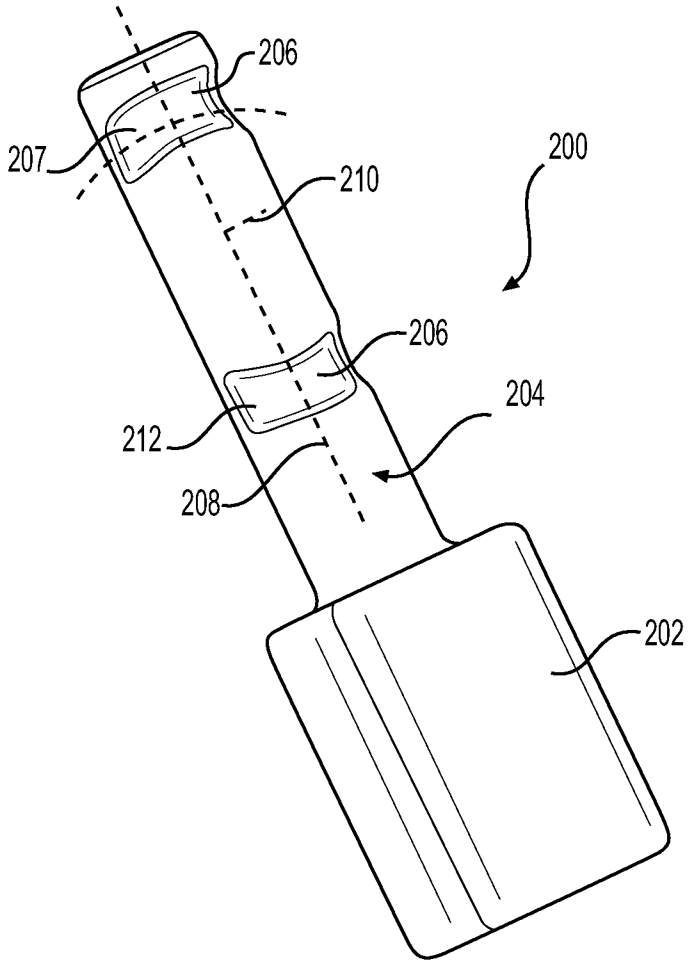

FIG. 16

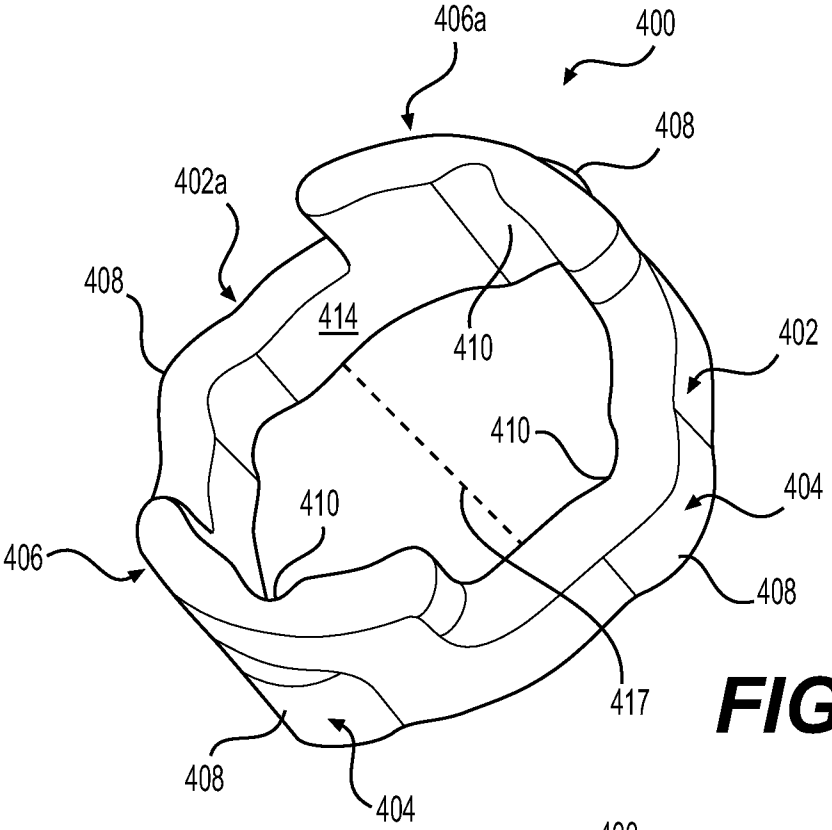
406a
400
408
402a
408
414
410
402
410
404
410
406
408
417
408
404

FIG. 17

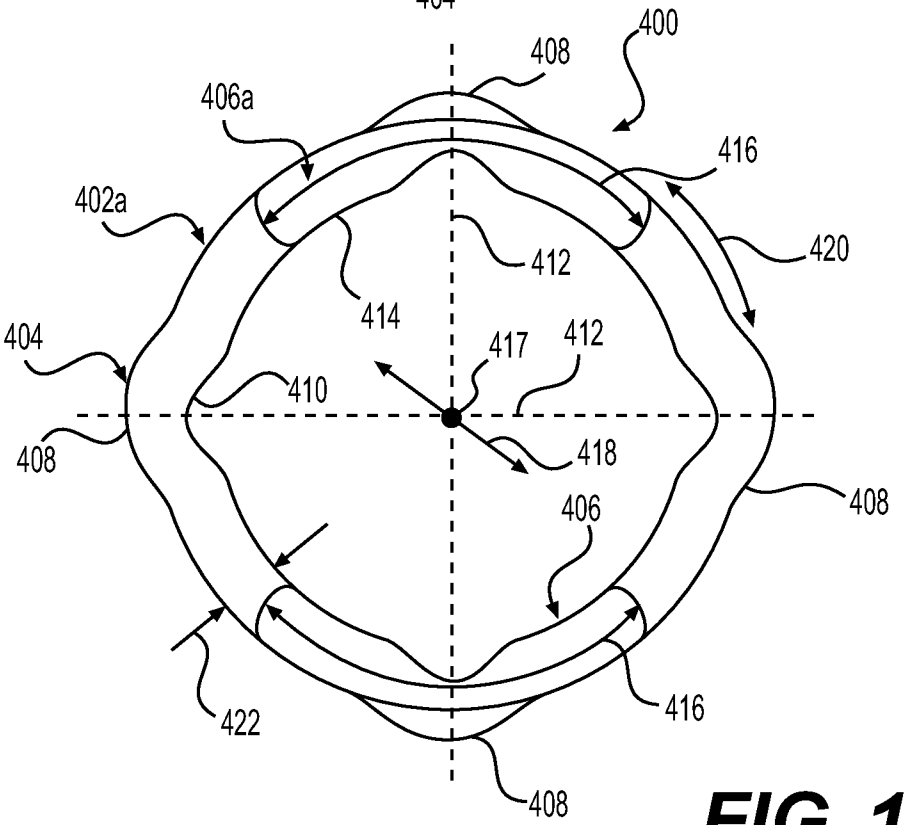
400
408
406a
416
402a
420
412
414
404
417
412
410
408
418
408
406
422
416
408

FIG. 18

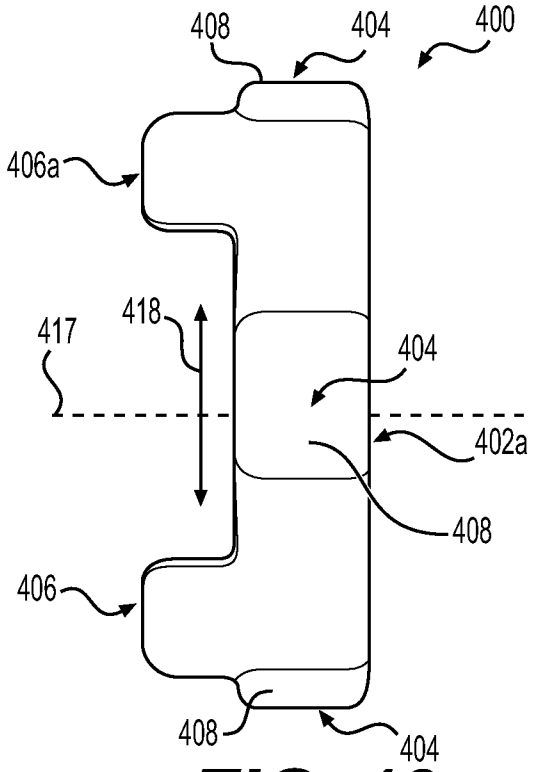
408
404
400
406a
418
417
404
402a
408
406
408
404

FIG. 19

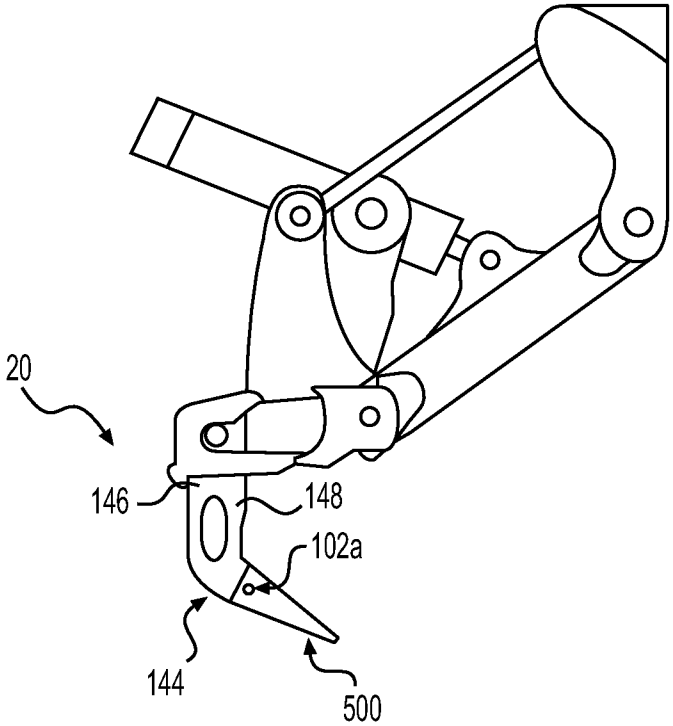
20
146
148
102a
144
500

FIG. 20

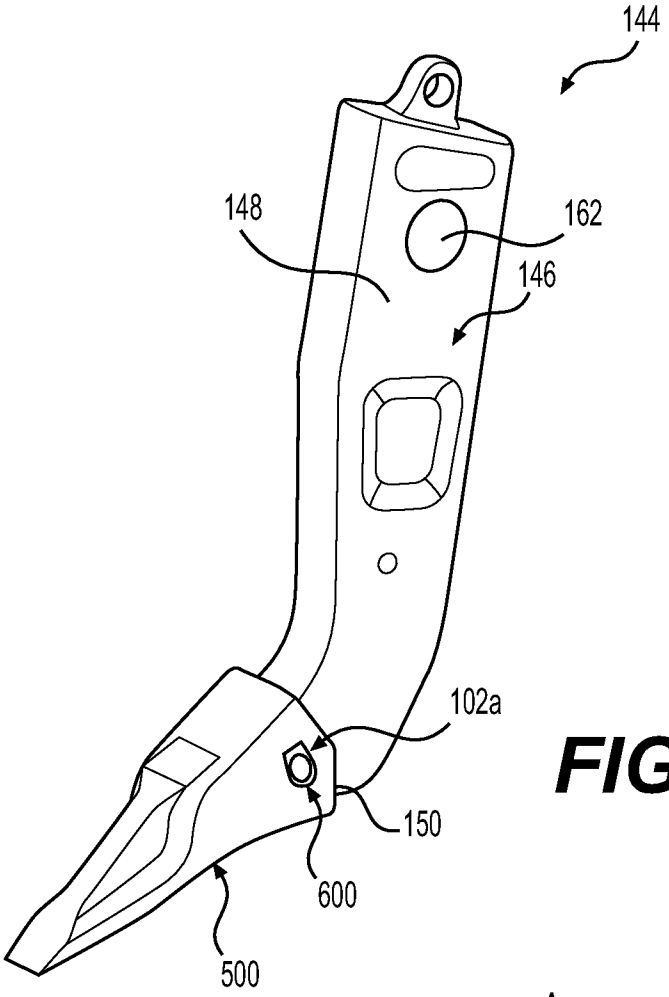
144
148
162
146
102a
150
600
500

FIG. 21

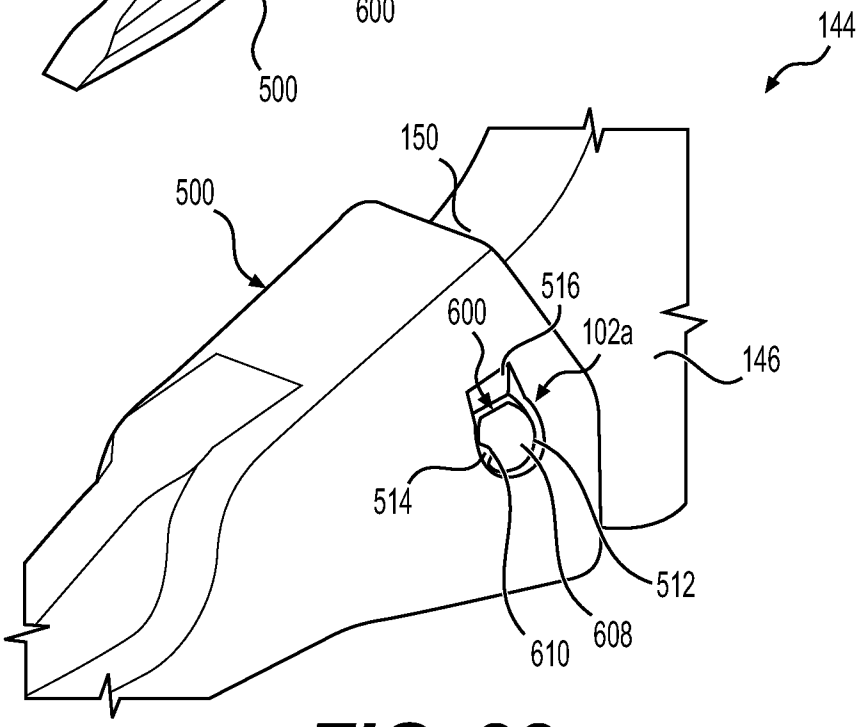
144
150
500
516
600
102a
146
514
512
610
608

FIG. 22

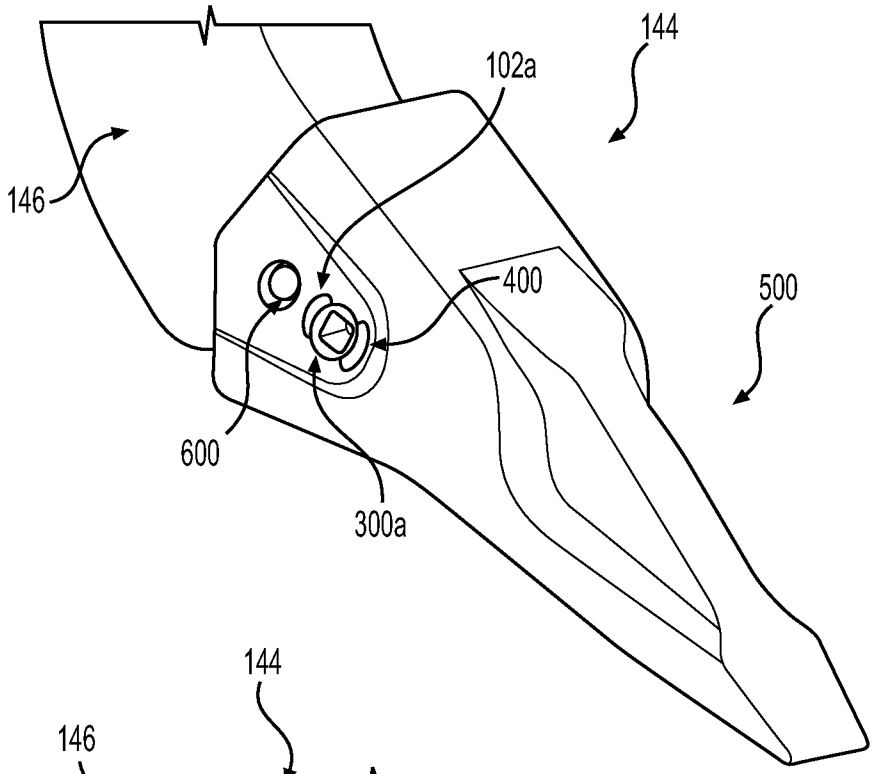
144
102a
146
400
500
600
300a

FIG. 23

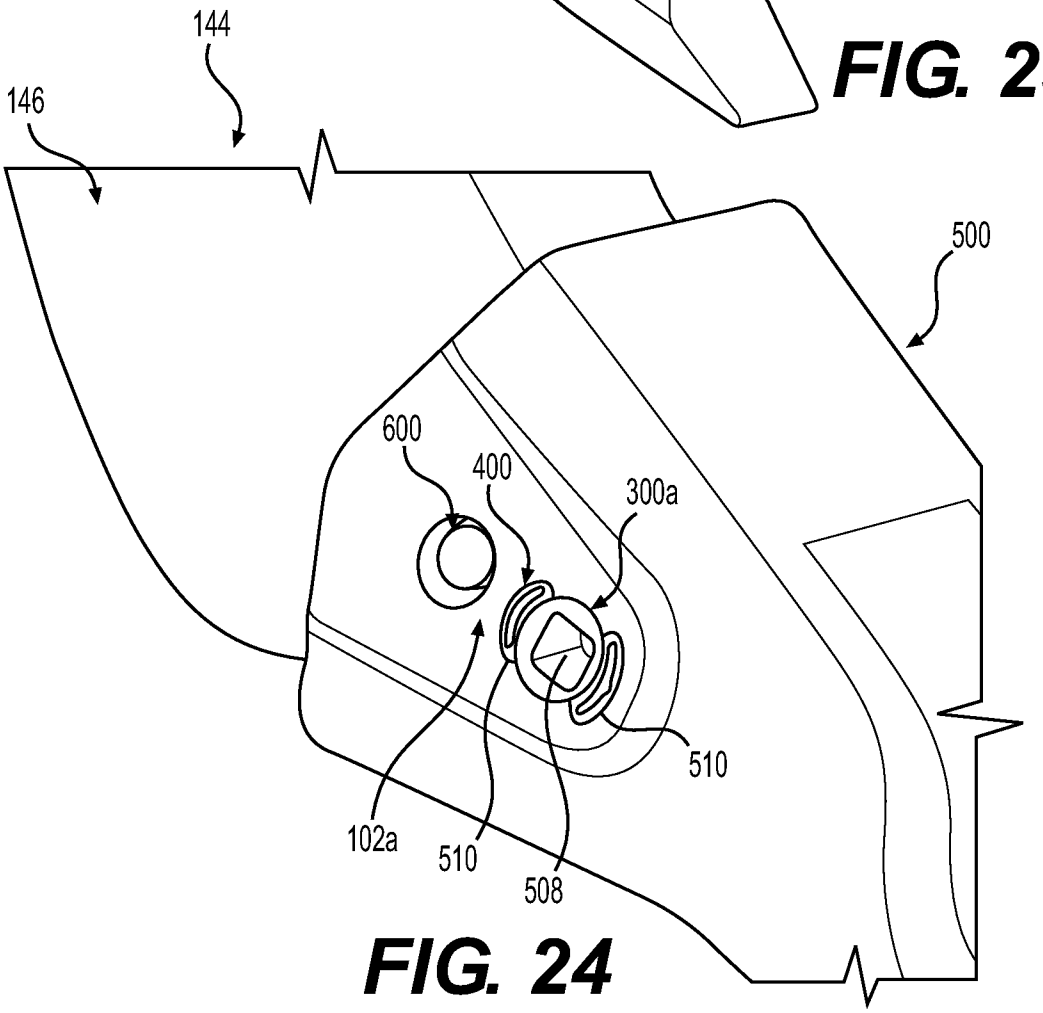
144
146
500
600
400
300a
510
102a
510
508

FIG. 24

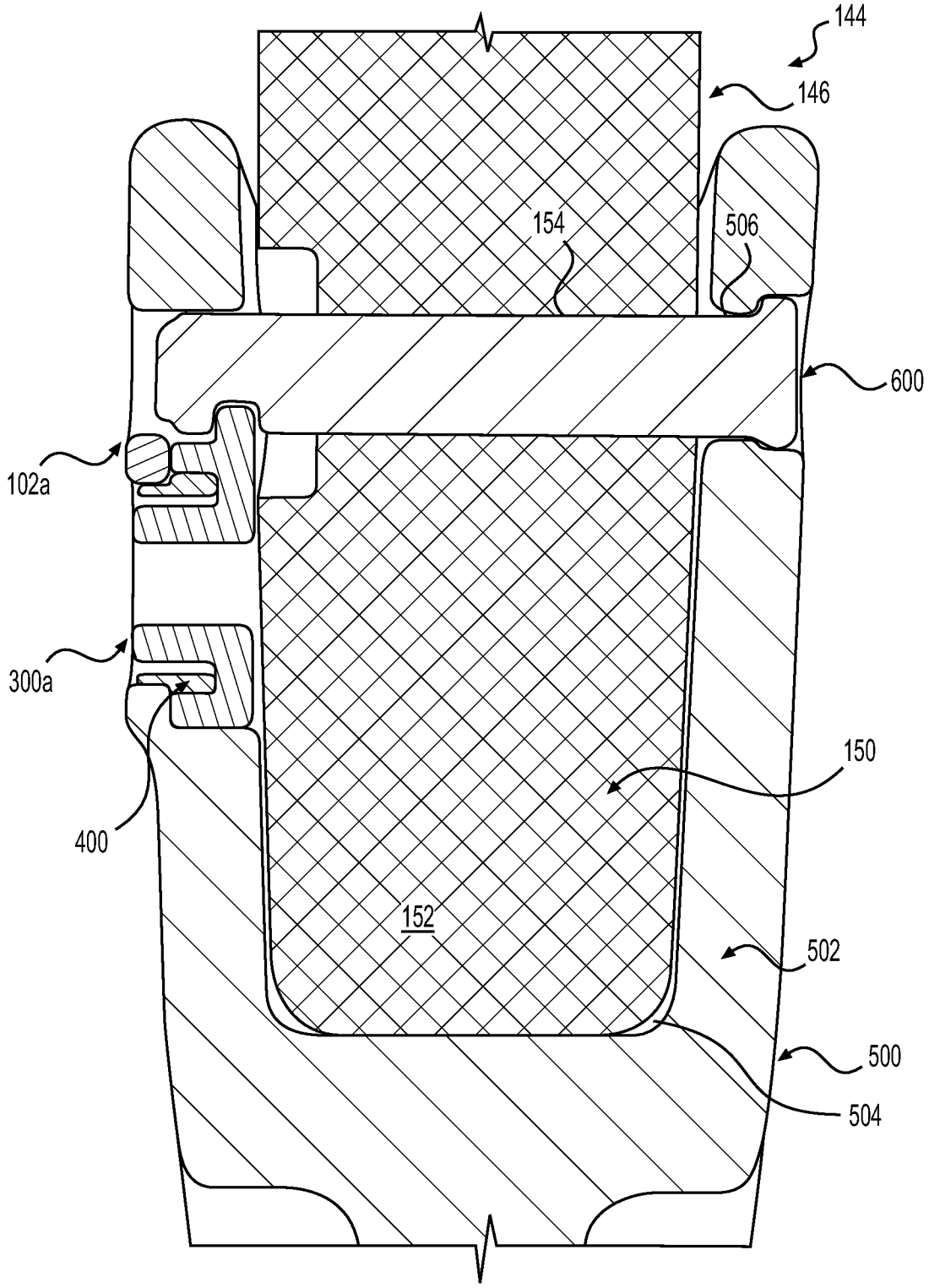

FIG. 25

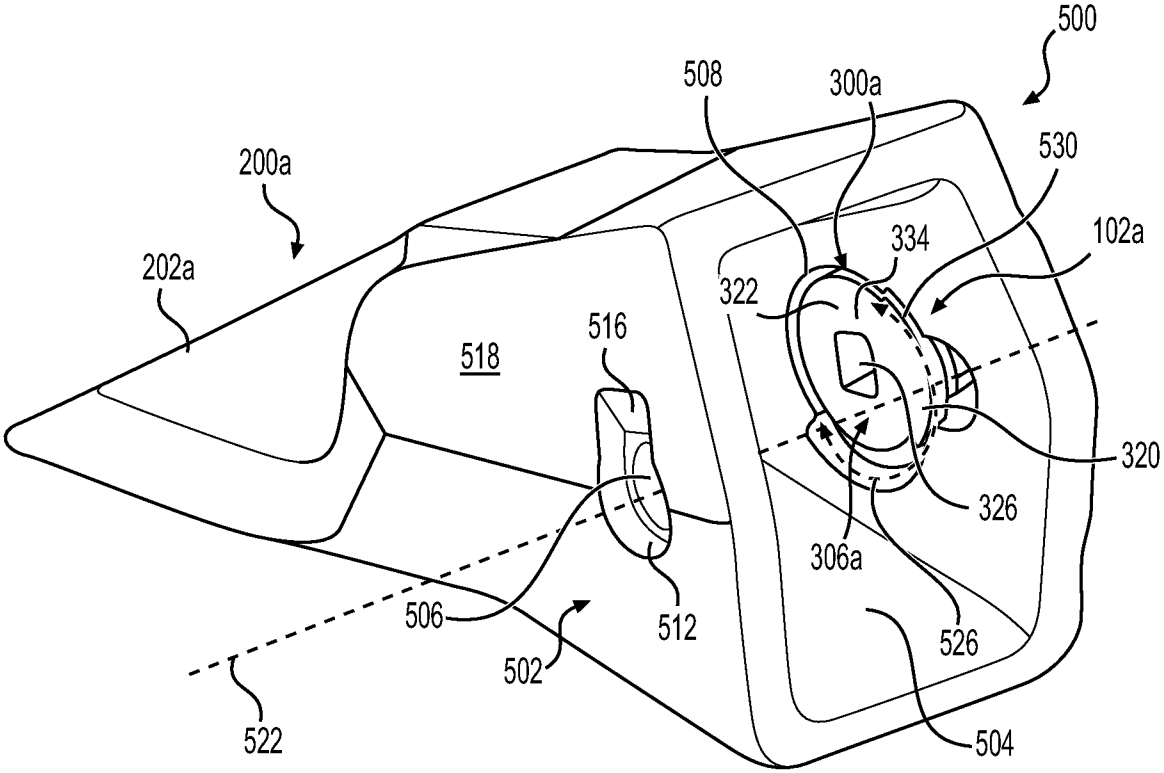
500
508
300a
530
200a
334
102a
202a
322
518
516
320
326
306a
506
512
526
502
522
504

FIG. 26

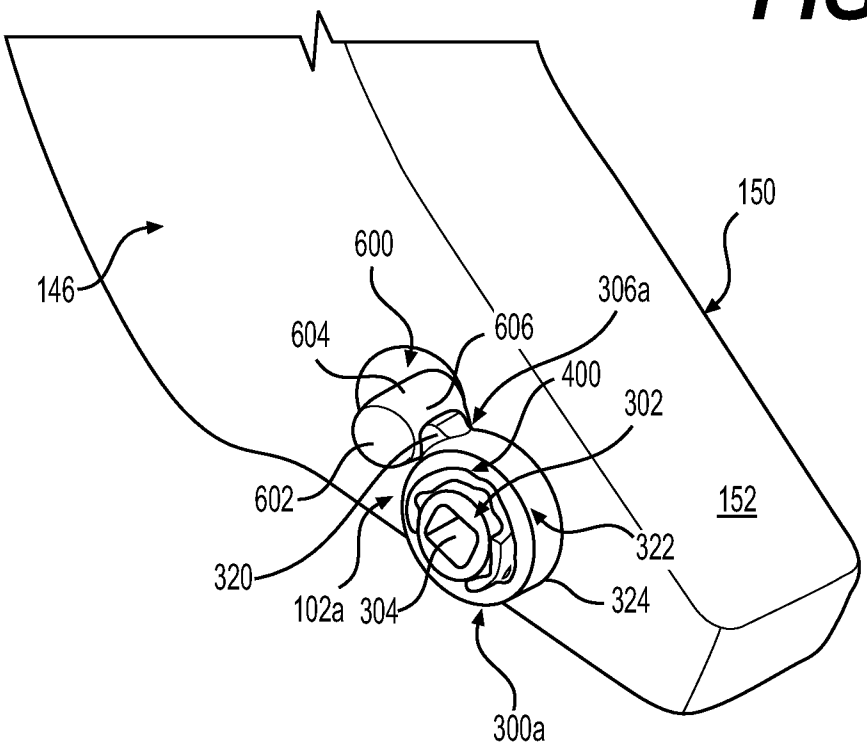
150
146
600
306a
604
606
400
302
602
152
322
320
102a
304
324
300a

FIG. 27

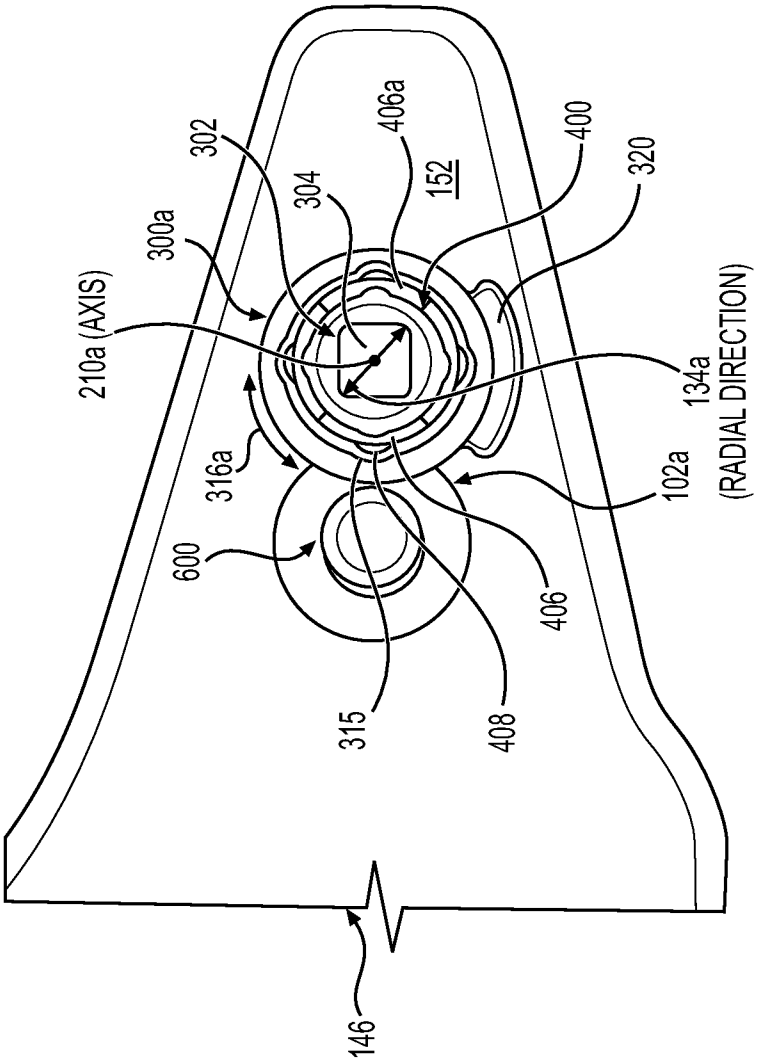
302
300a
210a (AXIS)
304
406a
152
400
320
134a
(RADIAL DIRECTION)
316a
102a
600
406
315
408
146

FIG. 28

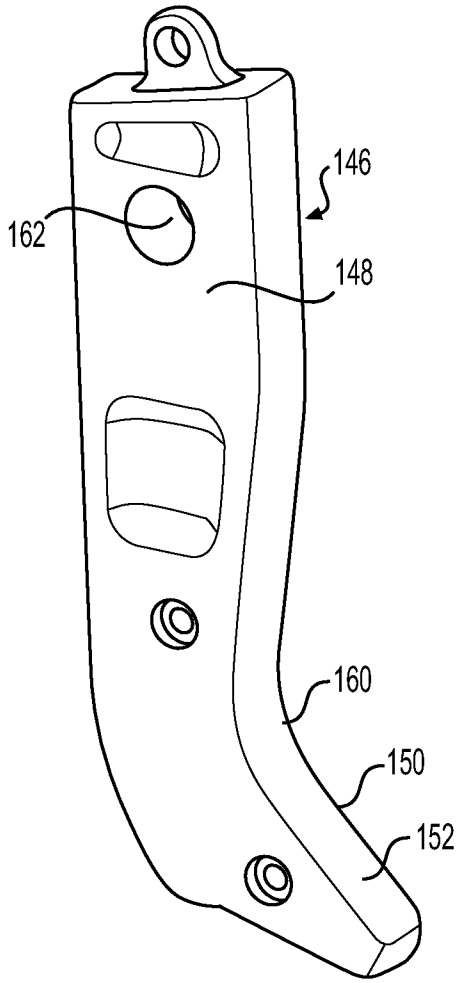

FIG. 29

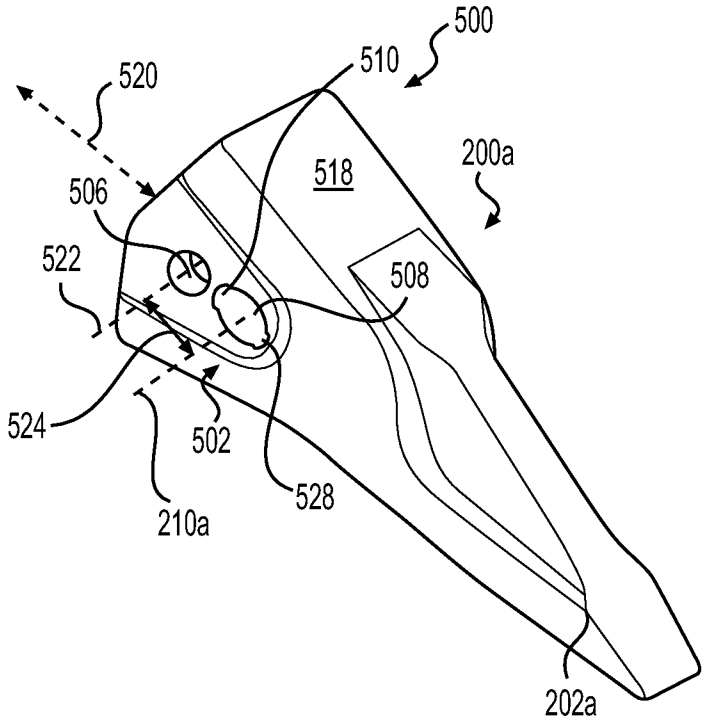

FIG. 30

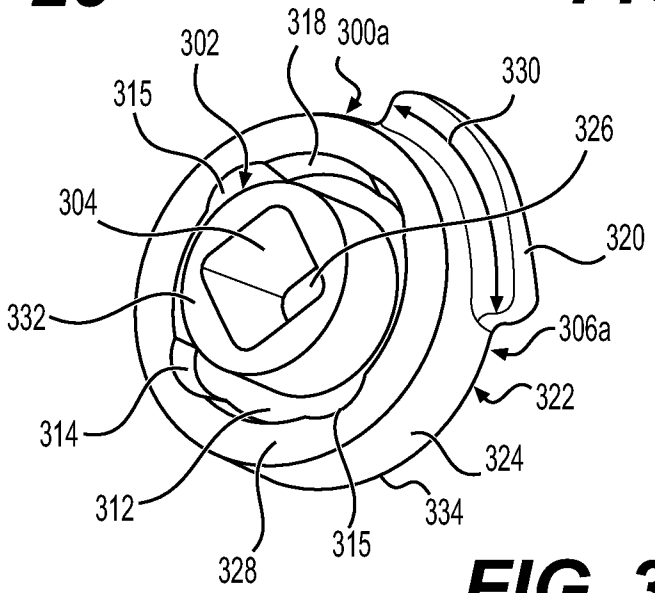

FIG. 31

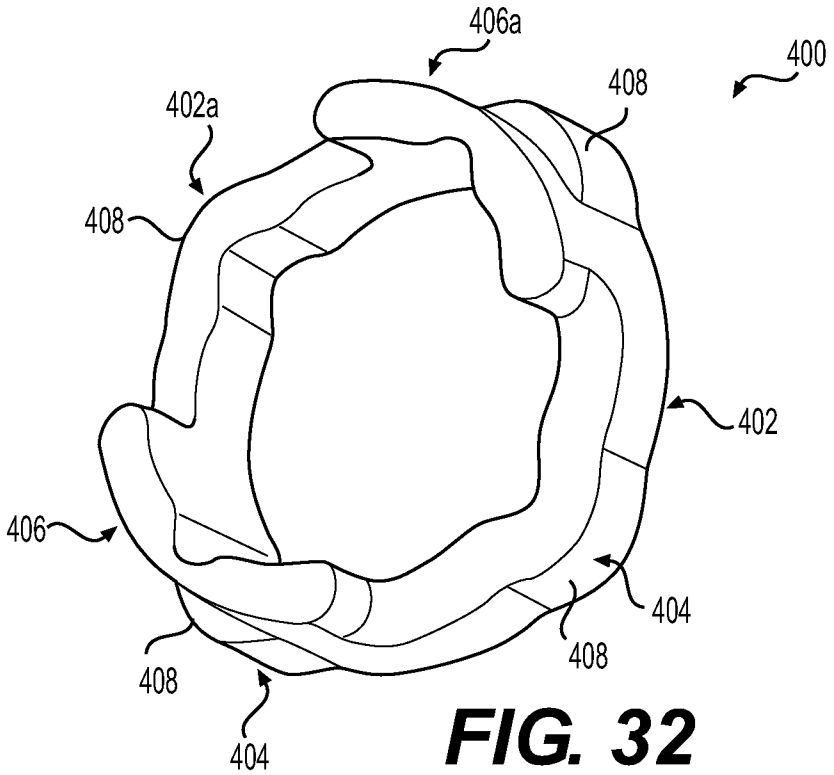
406a
400
408
402a
408
402
406
404
408
408
404

FIG. 32

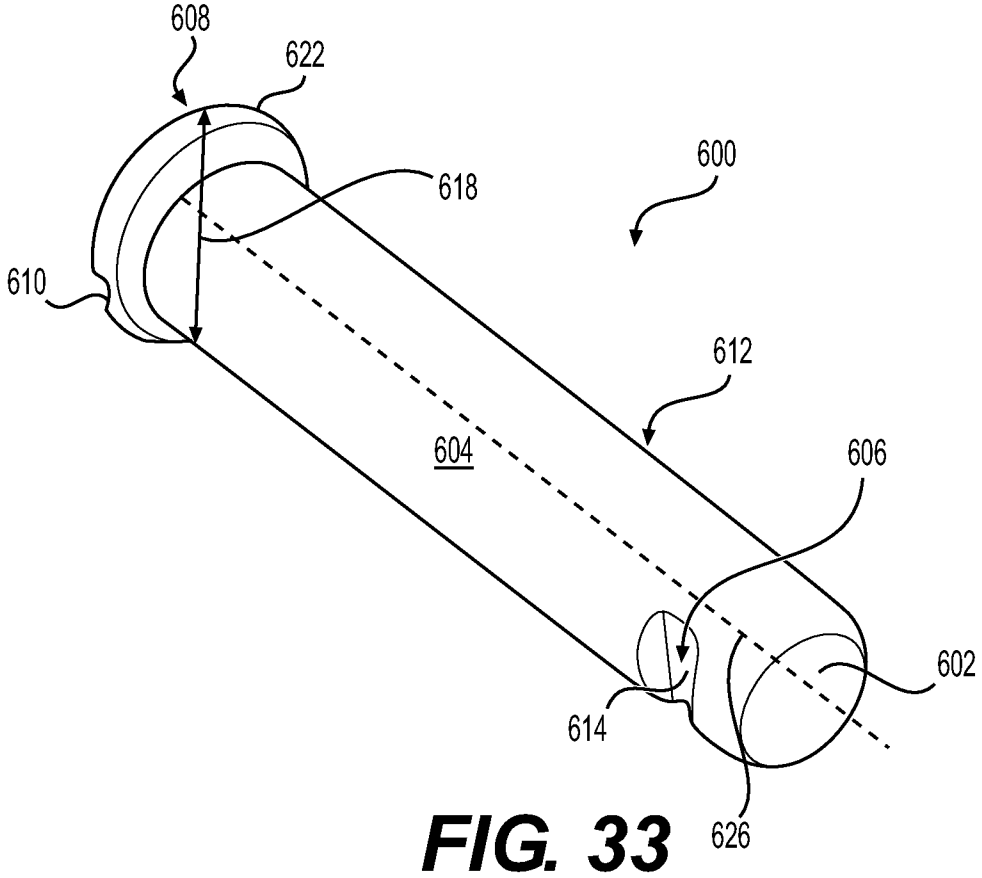
608
622
618
600
610
612
604
606
602
614
626

FIG. 33

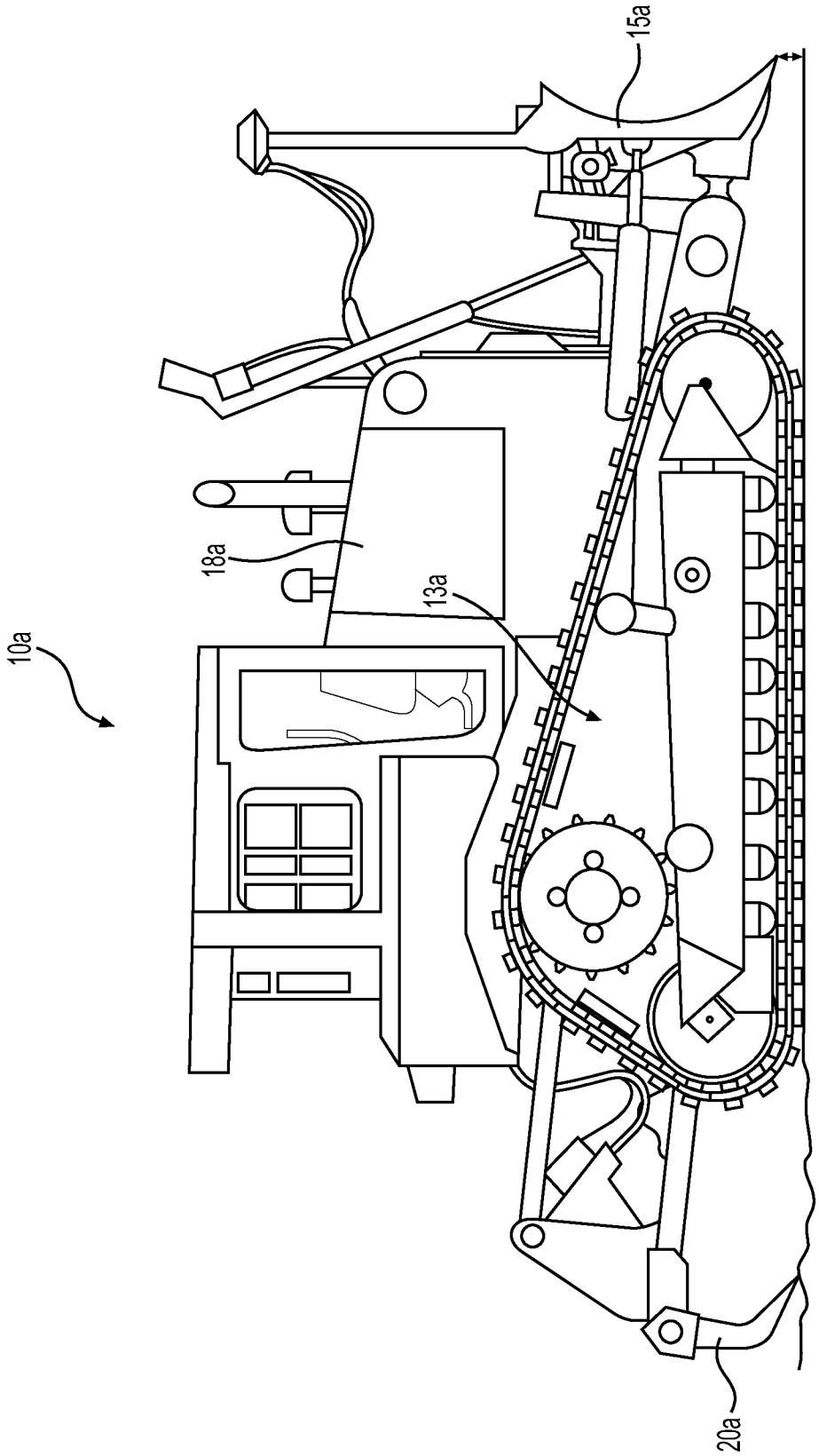

FIG. 34

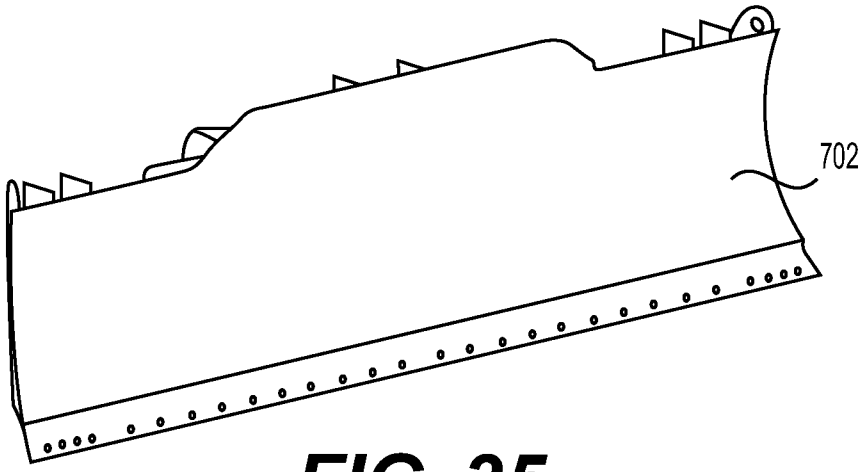

FIG. 35

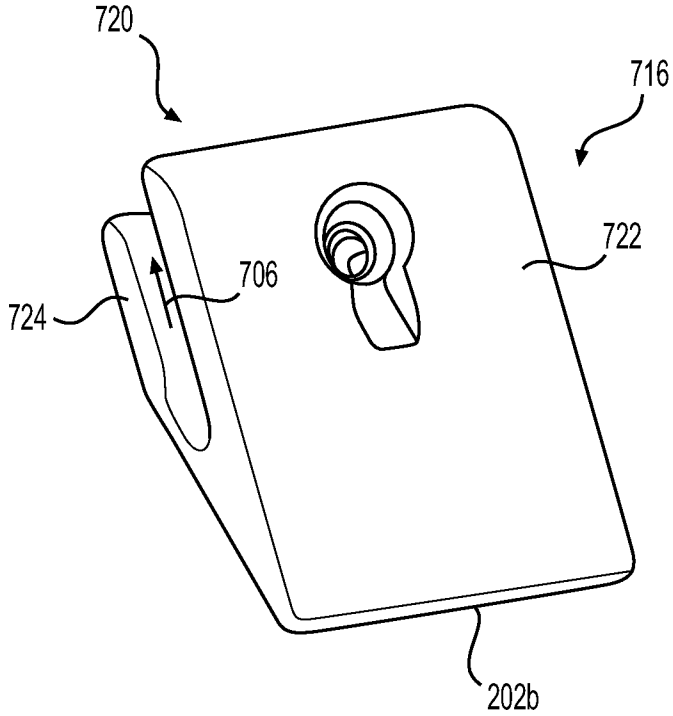

FIG. 36

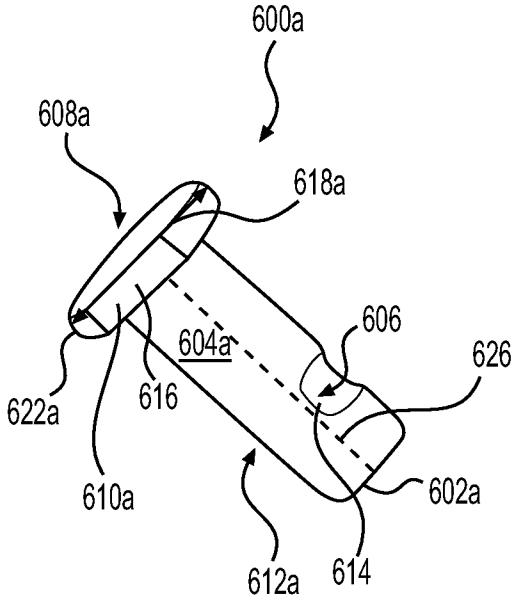

FIG. 37

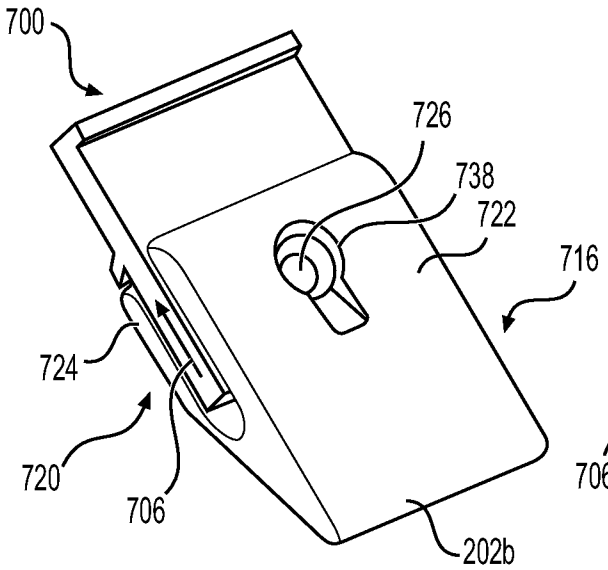

FIG. 38

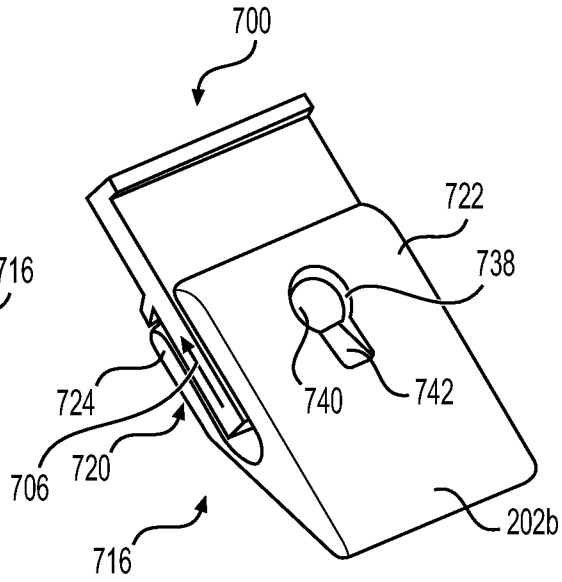

FIG. 39

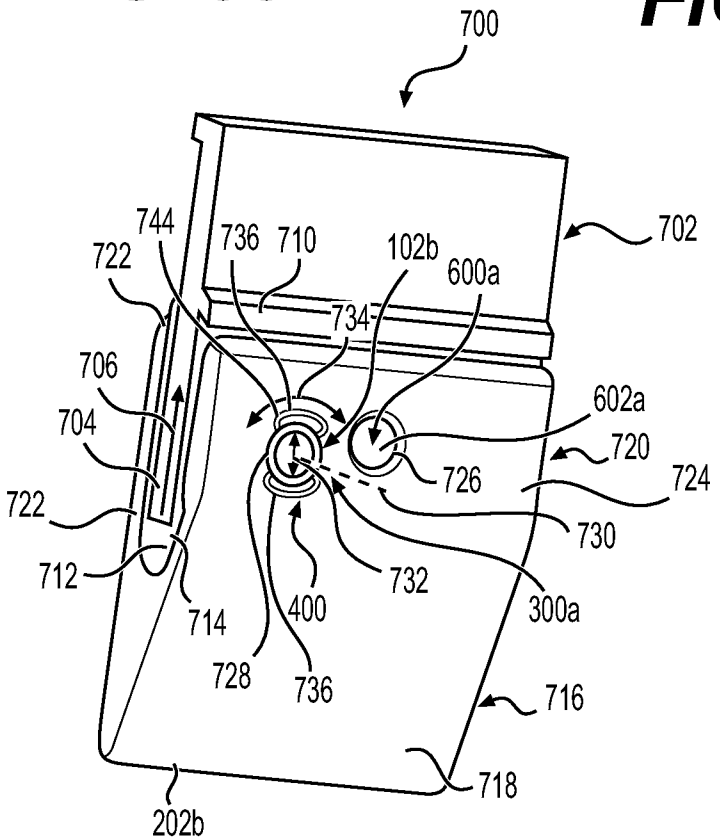

FIG. 40

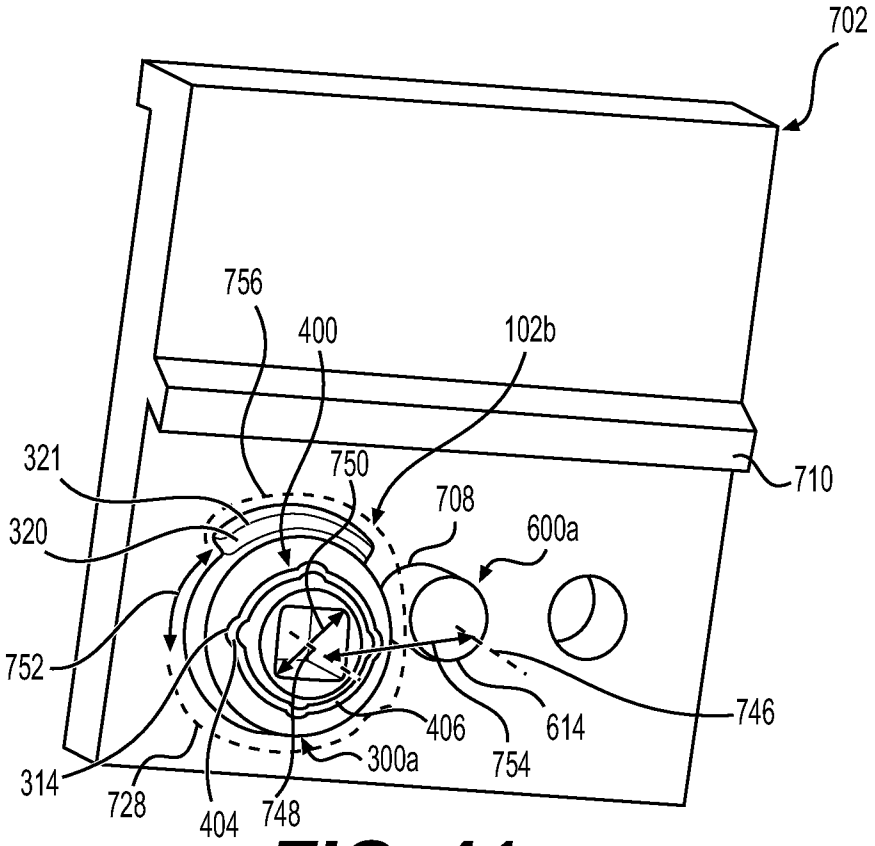
702
756
400
102b
321
750
710
708
320
600a
752
746
406
614
300a
754
314
728
404
748

FIG. 41

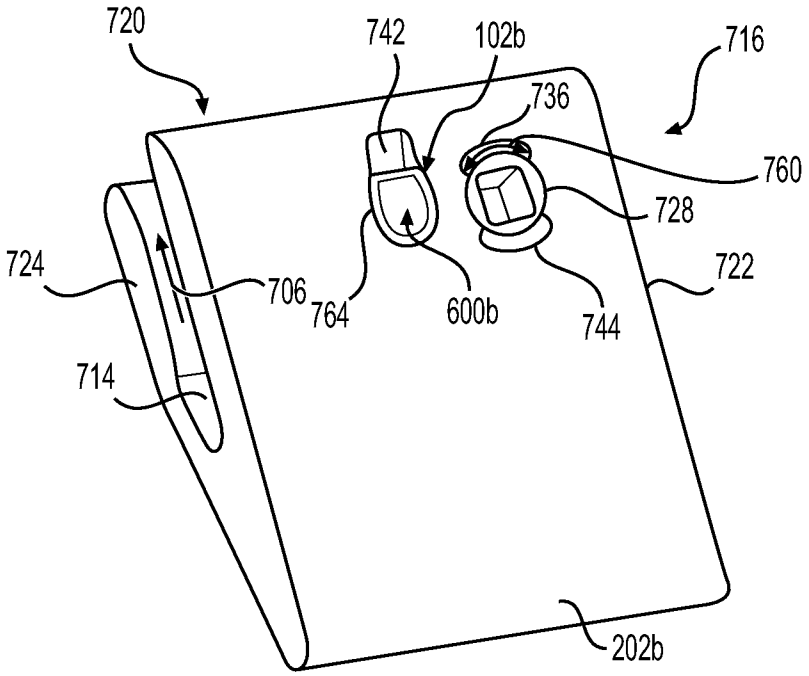
720
742
102b
716
736
760
728
724
706
764
600b
744
722
714
202b

FIG. 42

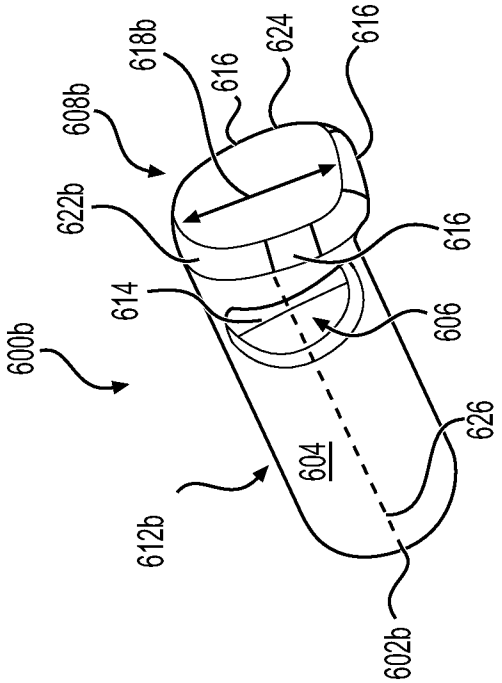
600b
608b
618b
616
624
616
622b
616
614
606
604
626
612b
602b

FIG. 44

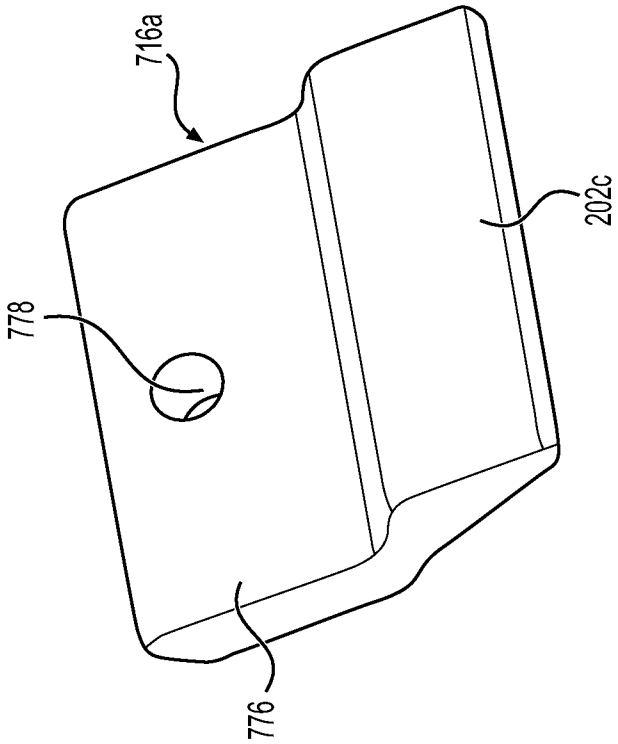
716a
778
202c
776

FIG. 43

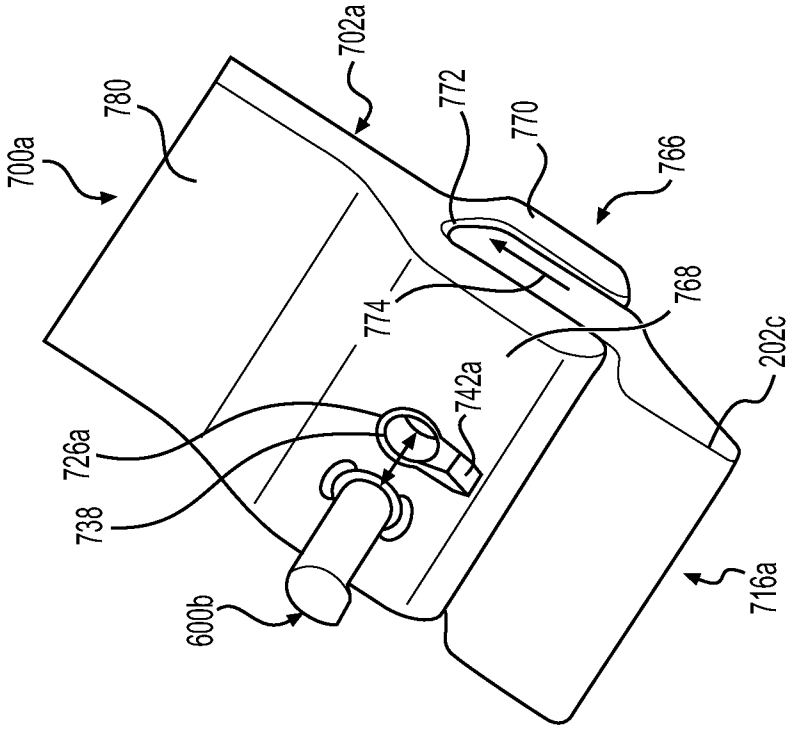
700a
780
702a
772
770
766
774
768
202c
726a
742a
738
600b
716a

FIG. 46

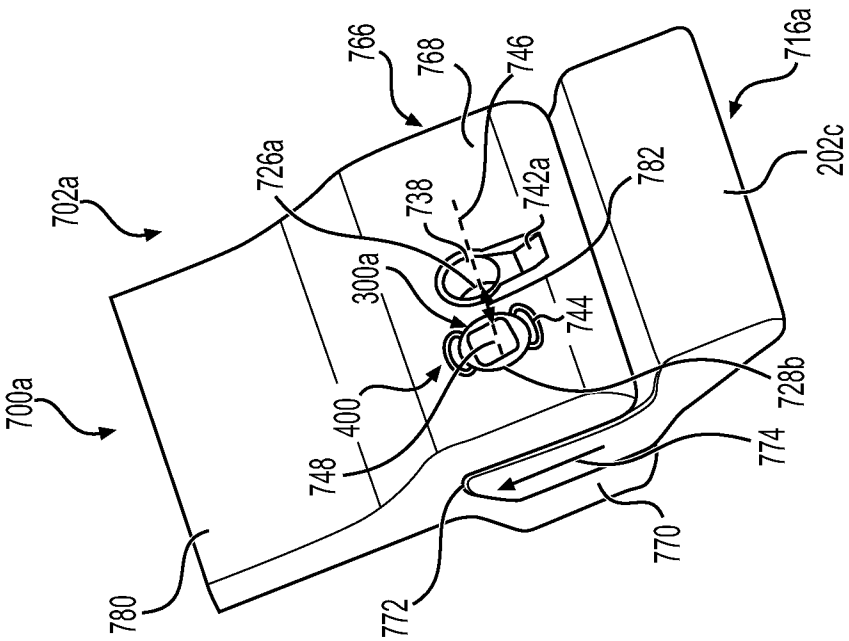
700a
702a
780
726a
766
768
746
716a
202c
738
742a
782
300a
744
400
748
728b
774
770
772

FIG. 45

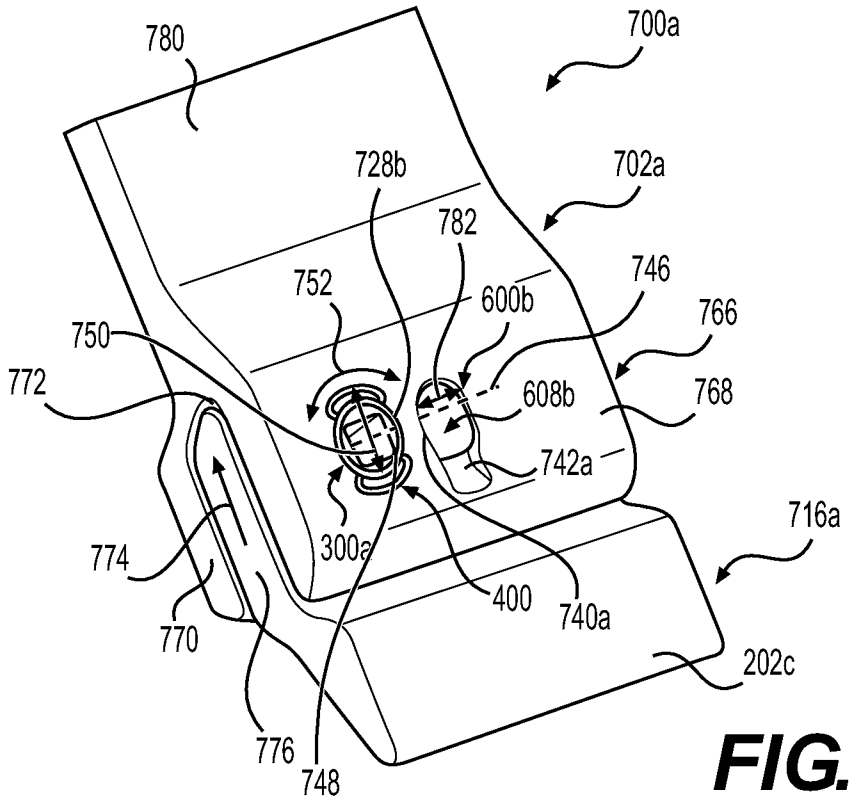
780
700a
728b
702a
782
752
746
600b
750
766
772
608b
768
742a
716a
300a
774
400
740a
770
202c
776
748

FIG. 47

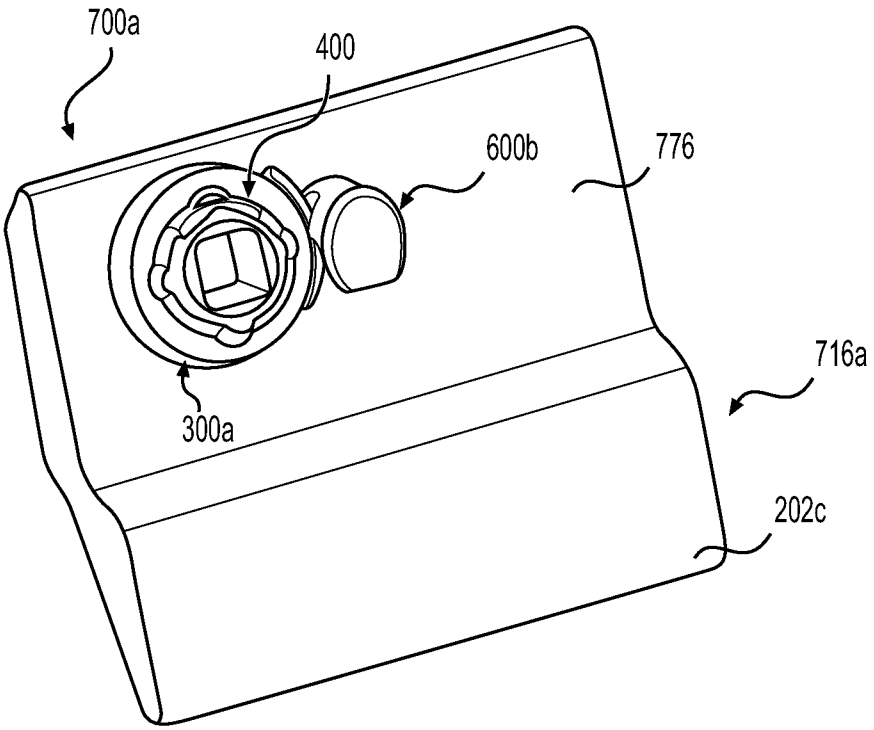
700a
400
600b
776
716a
300a
202c

FIG. 48

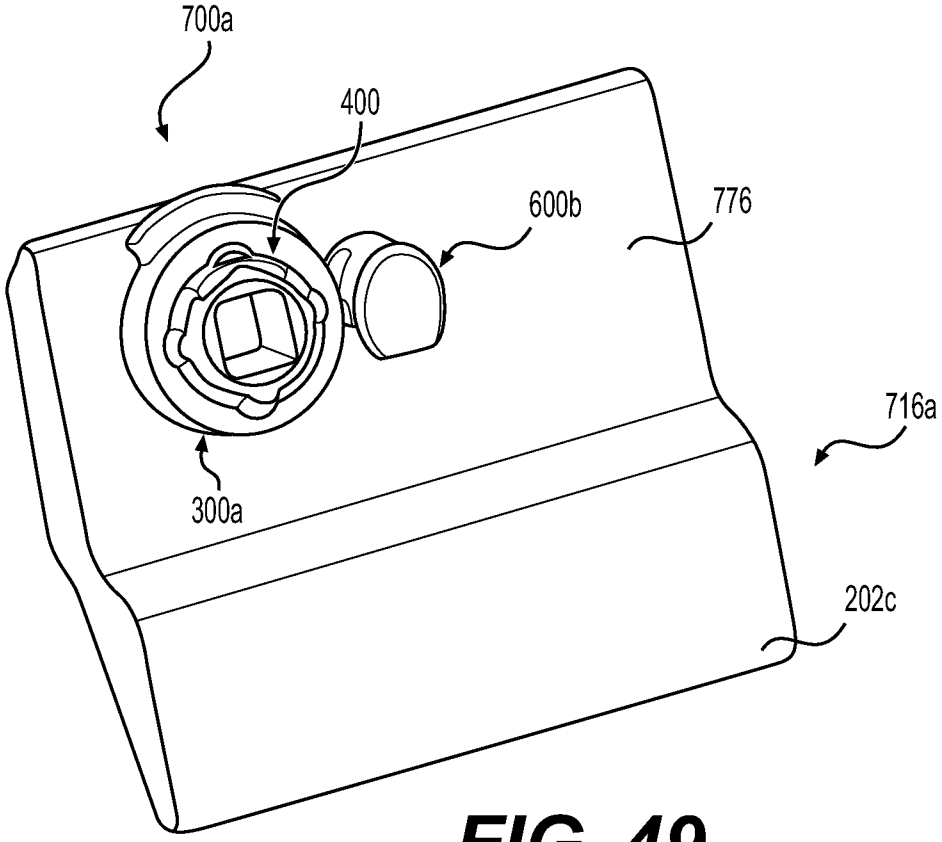

FIG. 49

INTERNATIONAL SEARCH REPORT

International application No.
PCT/US2021/038436

Box No. II Observations where certain claims were found unsearchable (Continuation of item 2 of first sheet)

This international search report has not been established in respect of certain claims under Article 17(2)(a) for the following reasons:

1. ☐ Claims Nos.:
because they relate to subject matter not required to be searched by this Authority, namely:

2. ☐ Claims Nos.:
because they relate to parts of the international application that do not comply with the prescribed requirements to such an extent that no meaningful international search can be carried out, specifically:

3. ☐ Claims Nos.:
because they are dependent claims and are not drafted in accordance with the second and third sentences of Rule 6.4(a).

Box No. III Observations where unity of invention is lacking (Continuation of item 3 of first sheet)

This International Searching Authority found multiple inventions in this international application, as follows:

see additional sheet

1. ☐ As all required additional search fees were timely paid by the applicant, this international search report covers all searchable claims.

2. ☒ As all searchable claims could be searched without effort justifying an additional fees, this Authority did not invite payment of additional fees.

3. ☐ As only some of the required additional search fees were timely paid by the applicant, this international search report covers only those claims for which fees were paid, specifically claims Nos.:

4. ☐ No required additional search fees were timely paid by the applicant. Consequently, this international search report is restricted to the invention first mentioned in the claims; it is covered by claims Nos.:

Remark on Protest

☐ The additional search fees were accompanied by the applicant's protest and, where applicable, the payment of a protest fee.

☐ The additional search fees were accompanied by the applicant's protest but the applicable protest fee was not paid within the time limit specified in the invitation.

☐ No protest accompanied the payment of additional search fees.

INTERNATIONAL SEARCH REPORT

International application No
PCT/US2021/038436

A. CLASSIFICATION OF SUBJECT MATTER
INV. E02F9/28
ADD.

According to International Patent Classification (IPC) or to both national classification and IPC

B. FIELDS SEARCHED

Minimum documentation searched (classification system followed by classification symbols)
E02F

Documentation searched other than minimum documentation to the extent that such documents are included in the fields searched

Electronic data base consulted during the international search (name of data base and, where practicable, search terms used)

EPO-Internal, WPI Data

C. DOCUMENTS CONSIDERED TO BE RELEVANT

Category*	Citation of document, with indication, where appropriate, of the relevant passages	Relevant to claim No.
X	KR 2015 0137346 A (SUNGBO IND CO LTD [KR]) 9 December 2015 (2015-12-09)	1-4
A	abstract; figures 1-3	5-7

X	EP 3 205 781 A1 (METALOGENIA RES & TECH S L [ES]) 16 August 2017 (2017-08-16) abstract; figures 1, 13-16	8-10

A	US 10 047 503 B2 (CATERPILLAR INC [US]) 14 August 2018 (2018-08-14) cited in the application the whole document	1-10

A	WO 2013/009952 A1 (ESCO CORP [US]; CHEYNE MARK A [US] ET AL.) 17 January 2013 (2013-01-17) abstract; figures 27-30	1-4

☐ Further documents are listed in the continuation of Box C.

☒ See patent family annex.

* Special categories of cited documents :

"A" document defining the general state of the art which is not considered to be of particular relevance

"E" earlier application or patent but published on or after the international filing date

"L" document which may throw doubts on priority claim(s) or which is cited to establish the publication date of another citation or other special reason (as specified)

"O" document referring to an oral disclosure, use, exhibition or other means

"P" document published prior to the international filing date but later than the priority date claimed

"T" later document published after the international filing date or priority date and not in conflict with the application but cited to understand the principle or theory underlying the invention

"X" document of particular relevance; the claimed invention cannot be considered novel or cannot be considered to involve an inventive step when the document is taken alone

"Y" document of particular relevance; the claimed invention cannot be considered to involve an inventive step when the document is combined with one or more other such documents, such combination being obvious to a person skilled in the art

"&" document member of the same patent family

Date of the actual completion of the international search	Date of mailing of the international search report
8 October 2021	21/10/2021

Name and mailing address of the ISA/	Authorized officer
European Patent Office, P.B. 5818 Patentlaan 2 NL - 2280 HV Rijswijk Tel. (+31-70) 340-2040, Fax: (+31-70) 340-3016	Ferrien, Yann

INTERNATIONAL SEARCH REPORT

Information on patent family members

International application No
PCT/US2021/038436

Patent document cited in search report		Publication date	Patent family member(s)			Publication date
KR 20150137346	A	09-12-2015	NONE			
EP 3205781	A1	16-08-2017	AU	2017218608	A1	30-08-2018
			BR	112018016237	A2	18-12-2018
			CA	3013663	A1	17-08-2017
			CL	2018002195	A1	23-11-2018
			CL	2019001731	A1	27-09-2019
			EP	3205781	A1	16-08-2017
			EP	3414402	A1	19-12-2018
			ES	2804602	T3	08-02-2021
			RU	2018131033	A	12-03-2020
			US	2019024349	A1	24-01-2019
			US	2020392704	A1	17-12-2020
			WO	2017137619	A1	17-08-2017
			ZA	201805236	B	26-06-2019
US 10047503	B2	14-08-2018	AU	2014274037	A1	21-01-2016
			BR	112015029328	A2	25-07-2017
			CA	2912822	A1	04-12-2014
			CL	2015003474	A1	16-09-2016
			CN	105247141	A	13-01-2016
			EP	3004472	A1	13-04-2016
			ES	2731330	T3	15-11-2019
			KR	20160015270	A	12-02-2016
			MX	369630	B	14-11-2019
			RU	2015153277	A	27-06-2017
			US	2014352182	A1	04-12-2014
			US	2017030055	A1	02-02-2017
			WO	2014194159	A1	04-12-2014
WO 2013009952	A1	17-01-2013	AR	087187	A1	26-02-2014
			AU	2012281135	A1	02-05-2013
			AU	2016200257	A1	04-02-2016
			AU	2016253640	A1	24-11-2016
			AU	2018203046	A1	17-05-2018
			AU	2020270490	A1	17-12-2020
			BR	112014000595	A2	14-02-2017
			BR	122020003113	B1	23-03-2021
			BR	122020003132	B1	23-03-2021
			BR	122020003143	B1	23-03-2021
			BR	122020003162	B1	23-03-2021
			CA	2838077	A1	17-01-2013
			CA	3029708	A1	17-01-2013
			CL	2014000097	A1	18-08-2014
			CL	2017001528	A1	23-02-2018
			CL	2019001506	A1	09-08-2019
			CN	103649427	A	19-03-2014
			CN	105297825	A	03-02-2016
			CN	105735403	A	06-07-2016
			CN	108316390	A	24-07-2018
			CO	6852047	A2	30-01-2014
			CY	1119776	T1	27-06-2018
			DK	2732104	T3	02-01-2018
			EA	201400130	A1	30-05-2014
			EA	201692068	A1	28-02-2017
			EA	201891581	A1	30-11-2018
			EP	2732104	A1	21-05-2014
			EP	3266943	A1	10-01-2018

INTERNATIONAL SEARCH REPORT

Information on patent family members

International application No
PCT/US2021/038436

Patent document cited in search report	Publication date	Patent family member(s)	Publication date
		EP 3388584 A1	17-10-2018
		EP 3514291 A1	24-07-2019
		EP 3581721 A1	18-12-2019
		EP 3680401 A1	15-07-2020
		ES 2650629 T3	19-01-2018
		HR P20171845 T1	12-01-2018
		HU E037481 T2	28-08-2018
		JO 3726 B1	31-01-2021
		JP 6265893 B2	24-01-2018
		JP 6567606 B2	28-08-2019
		JP 6682677 B2	15-04-2020
		JP 2014520983 A	25-08-2014
		JP 2017198065 A	02-11-2017
		JP 2019143468 A	29-08-2019
		JP 2019190271 A	31-10-2019
		KR 20140048200 A	23-04-2014
		KR 20190033656 A	29-03-2019
		LT 2732104 T	27-11-2017
		MX 336220 B	12-01-2016
		MY 165067 A	28-02-2018
		NZ 618433 A	24-06-2016
		NZ 716820 A	28-04-2017
		PE 20141847 A1	08-12-2014
		PE 20180852 A1	17-05-2018
		PE 20180853 A1	17-05-2018
		PE 20191277 A1	20-09-2019
		PL 2732104 T3	28-02-2018
		PT 2732104 T	19-12-2017
		SI 2732104 T1	31-01-2018
		TW 201313993 A	01-04-2013
		US 2013174453 A1	11-07-2013
		US 2015368884 A1	24-12-2015
		US 2018266084 A1	20-09-2018
		US 2018266085 A1	20-09-2018
		WO 2013009952 A1	17-01-2013

FURTHER INFORMATION CONTINUED FROM PCT/ISA/ 210

This International Searching Authority found multiple (groups of) inventions in this international application, as follows:

1. claims: 1-10

Retaining system and work tool or work member

1.1. claims: 1-7

Retaining system characterized by the following potential special technical feature: the retainer comprises a lock with a drive portion and a locking portion including a radially extending wing and an axially extending rib forming an annular cavity with a detent receiving aperture

1.2. claims: 8-10

Work tool or wear member characterized by the following potential special technical feature: the work tool or wear member comprises a nose portion receiving cavity, a pin receiving thru-hole in communication with the cavity and a lock receiving aperture spaced away from the pin receiving thru-hole

---