(19) Europäisches Patentamt
European Patent Office
Office européen des brevets

(11) EP 0 616 298 B1

(12) **EUROPEAN PATENT SPECIFICATION**

(45) Date of publication and mention of the grant of the patent:
**29.04.1998 Bulletin 1998/18**

(51) Int Cl.[6]: **G06K 11/16**, G06K 11/18

(21) Application number: **94102739.3**

(22) Date of filing: **23.02.1994**

(54) **Position input device and input apparatus using the same**

Positionseingabevorrichtung und Apparat zu seiner Verwendung

Dispositif d'entrée de position et appareil l'utilisant

(84) Designated Contracting States:
**DE FR GB**

(30) Priority: **25.02.1993 JP 35973/93**
**26.08.1993 JP 211226/93**

(43) Date of publication of application:
**21.09.1994 Bulletin 1994/38**

(73) Proprietor: **MATSUSHITA ELECTRIC INDUSTRIAL CO., LTD.**
**Kadoma-shi, Osaka-fu, 571 (JP)**

(72) Inventors:
- **Okada, Hiroyasu**
  **Kadoma-shi, Osaka 571 (JP)**
- **Yano, Tadashi**
  **Hirakata-shi, Osaka 573 (JP)**
- **Nishiono, Hiroaki**
  **Osaka-shi, Osaka 535 (JP)**
- **Tama, Naotaka**
  **Tsuruga-shi, Fukui 914 (JP)**

(74) Representative: **Grünecker, Kinkeldey,**
**Stockmair & Schwanhäusser Anwaltssozietät**
**Maximilianstrasse 58**
**80538 München (DE)**

(56) References cited:
**WO-A-88/09046** **US-A- 4 313 113**

- **PATENT ABSTRACTS OF JAPAN vol. 12, no. 161 (P-702)17 May 1988 & JP-A-62 274 414 (MITSUBOSHI BELTING LTD.) 28 November 1987**

Note: Within nine months from the publication of the mention of the grant of the European patent, any person may give notice to the European Patent Office of opposition to the European patent granted. Notice of opposition shall be filed in a written reasoned statement. It shall not be deemed to have been filed until the opposition fee has been paid. (Art. 99(1) European Patent Convention).

EP 0 616 298 B1

Printed by Jouve, 75001 PARIS (FR)

## Description

### FIELD OF THE INVENTION

The present invention relates to a position input device such as pointing device used in personal computer, word processor, other information processing apparatus, and home-use game appliances, and an input apparatus using the same.

### BACKGROUND OF THE INVENTION

A prior art is described by reference to a pointing device using a strain gauge shown in Fig. 17 (a), (b), and (c). As shown in the diagram, on four sides of a bar-shaped stick 23, strain gauges 24a, 24b in the X-axis direction, and 25a, 25b in the Y-axis direction are adhered.

The four strain gauges 24a, 24b, 25a, and 25b are connected as shown in Fig. 17 (c), that is, the strain gauges 24a, 24b in the X-axis direction being in series, and the strain gauges 25a, 25b in the Y-axis direction being in series.

The operation of the pointing device is described below. The force applied in the stick 23 distorts the stick 23 in the X-axis and Y-axis, and the strain gauges 24a, 24b, 25a, and 25b measure voltages Vx, Vy of which resistance is changed by the distortion of the stick 23, and therefore the direction of the applied force is detected by the synthesis of the changing amounts of the X-axis and Y-axis, and the magnitude of the applied force, by the absolute value of tne changing amounts of the X-axis and Y-axis.

However, in such conventional constitution, since strain gauges are used, it is expensive. Other problems were the poor operation feeling such as difficulty in recognizing the feeiing in actual manipulation, and the difficulty in making compact.

Further close prior art is known form US-A-4,313,113. This document discloses an input device comprising a lower film with four electrodes and an upper film on a movable pressing plate. The upper film is a common electrode and a pressure sensitive element is disposed between the electrodes on the upper and lower films.

### SUMMARY OF THE INVENTION

It is hence a primary object of the invention to present a compact position input device capable of detecting the direction of force and magnitude of force, being inexpensive and excellent in controllability, and an input apparatus using the same.

The invention provides a position input device comprising a lower film disposing four independent electrodes in four individual directions, an upper film disposing a common electrode confronting said independent electrodes, four, pressure sensitive elements, each pressure sensitive element having a variable resistance, and each pressure sensitive element being disposed between a respective said independent electrode and said common electrode, a pressing plate having an upper surface formed from a single member such that said upper surface forms a continuous, substantially flat surface, said pressing plate possessing protrusions at the positions for pressing said four pressure sensitive elements corresponding to said independent electrodes and an operational lever for manipulating said pressing plate, said operational lever being formed separately from said pressing plate, and being movable relative to said pressing plate, said operational lever having a lower surface formed from a single member such that said lower surface forms a continuous, substantially flat surface which engages said pressing plate,
wherein the resistance of each of said four pressure sensitive elements is measured during a given measurement to detect all the directions to which the operating lever is manipulated.

In the position input device of the invention, a printed wiring board can be used instead of the lower film.

In the position input device of the invention, a spacer can be placed between the pressure sensitive elements so that the pressure sensitive elements may not be pressed except in operation time.

In the position input device of the invention, pressure sensitive rubber can be used as pressure sensitive elements.

In the position input device of the invention, pressure sensitive rubber can be used as pressure sensitive elements, and the individual pressure sensitive elements are constituted into one body with the connecting parts.

The invention also provides d position input device comprising an A/D converter connected to the independent electrodes, and an operating unit connecting a memory unit in which the procedure for processing the digital data obtained by the A/D converter is written, wherein the memory unit possesses a table for converting the digital data obtained by the A/D converter into an operating force of the operation lever or a moving speed corresponding to the operating force of the operation level.

The invention also relates to an input apparatus using a position input device possessing plural input keys, and an operation lever set at a same height of the input keys or slightly higher, adjacently to the input keys.

An outline of the operation of the invention is described below.

When the force applied to the operation lever in the constitution described above is applied to the pressure sensitive elements in four directions through protrusions of the pressing plate, the changing resistances produced in the pressure sensitive elements are read from lead wires of the in dependent electrodes and the common electrode, and the pressure sensitive elements are sandwiched between the upper and lower films, and

therefore the structure is thin, it is easy to manufacture, and it is possible to produce at low cost.

## BRIEF DESCRIPTION OF THE DRAWINGS

Fig. 1 is a drawing showing an embodiment of a position input device of the invention.

Fig. 2 is a drawing showing pressing plate which is an essential part of the position input device of the invention.

Fig. 3 (a) is a plan view of the position Input device of the invention, and Fig. 3 (b) is its cross sectional view.

Fig. 4 is a diagram showing an equivalent circuit of the position input device of the invention.

Fig. 5 is a diagram showing the relation between the pressure and resistance of the pressure sensitive rubber of the position input device of the invention.

Fig. 6 is a diagram explaining the table for converting the digital data obtained by the AID converter of the position input device of the invention into the manipulated force of the operation lever.

Fig. 7 is a diagram showing the changes of resistance in the thickness direction of the pressure sensitive rubber of the position input device of the invention by the force in the thickness direction, and changes of tne voltage for A/D conversion.

Fig. 8 is a diagram explaining the behavior of changes of the resistance in the thickness direction of the pressure sensitive rubber of the position input device of the invention by the force in the thickness direction.

Fig. 9 (a) is a diagram explaining the operation of the position input device of the invention, and Fig. 9 (b) is its side view.

Fig. 11 is a diagram of a position input device in a different embodiment of the invention.

Fig. 12 is a diagram showing the pressure sensitive rubber which is an essential part of the position input device in a further different embodiment of the invention.

Fig. 13 (a) is a diagram showing an input apparatus of the invention possessing plural keys using a position input device herein, and Fig. 13 (b) is its side view.

Fig. 14 is a diagram showing the relation between a film disposing common electrode and a film disposing independent electrodes which are essential parts of a position input device in another embodiment of the invention.

Fig. 15 is a diagram showing the relation between a film disposing common electrode and a film disposing independent electrodes which are essential parts of a position input device in another different eabodiment of the invention.

Fig. 16 is a diagram showing the relation between a film disposing common electrode and a film disposing independent electrodes which are essential parts of a position input device in a further different embodiment of the invention.

Fig. 17 (a) is a diagram showing strain gauges which are essential parts of the pointing device of a conventional position input device, Fig. 17 (b) is its side view, and Fig. 17 (c) is its equivalent circuit.

## DESCRIPTION OF THE PREFERRED EMBODIMENTS

As shown in Fig. 1, on the upper surface of a lower film 9 having a hole 9a provided in the center, four independent electrodes 1, 2, 3 and 4 disposed in four directions are formed, and from the four independent electrodes 1, 2, 3 and 4, individual lead wires 5, 6, 7 and 8 are drawn out respectively and wired on the lower film 9. Similarly, on an upper film 12 having a hole 12a provided in the center, common electrode 10 and common lead wire 11 corresponding to all of the four independent electrodes 1, 2, 3 and 4 formed on the lower film 9 are wired.

Between the lower film 9 and upper film 12, four pressure sensitive elements 13a, 13b, 13c and 13d made of pressure sensitive rubber of which resistance changes depending on the pressure in the thickness direction are held to compose contact points, in contact with the four independent electrodes 1, 2, 3 and 4 on the lower film 9, and also in contact with the common electrode 10 provided beneath the upper film 12.

In the upper part of the upper film 12, a pressing plate 14 is disposed, and in the lower part thereof, as shown in Fig. 2, four spherical protrusions 14a for pressing the pressure sensitive elements 13a, 13b, 13c and 13d, respectively, are disposed, together with two stopping parts 14b provided on the circumference of the opposite side of the plane having a shaft 14c formed in the center, and a protrusions 14a. As shown n Fig. 1, an operation lever 15 and an upper case 16 are disposed on the upper surface of the pressing plate 14, and the assembly constitution is as shown in Fig. 3 (a), (b), in which the shaft portion of the operation lever 15 is inserted into a shaft hole 16a of the upper case 16 from the opening side of the upper case 16, and the pressing plate 14 is combined with the upper case 16 so as to pinch the operation lever 15, and the stopping parts 14b of the pressing pat 14 are inserted and stopped into pressing plate stopping holes 16b provided in the upper case 16.

The shaft 14c provided in the center of the lower side of the pressing plate 14 is combined with the hole 12a in the central part of the upper film 12 for composing the contact parts and the hole 9a in the central part of the lower film 9, is further assembled with the hole 17a in the central part of the lower case 17 to formed into one body, and screws 18 is driven into screw holes 17b provided at four corners of the lower case 17 to fasten the upper case 16 by screwing.

In this constitution of the invention, meanwhile, the pressure sensitive elements 13a, 13b, 13c, and 13d can be printed on the four independent electrodes 1, 2, 3 and 4 by using pressure sensitive conductive ink, or on the common electrodes 10. In this constitution, the in-

vention is capable of detecting the changes of the resistance of the individual pressure sensitive elements 13a, 13b, 13c and 13d, by measuring the resistance between the common lead wire 11 and the individual lead wire 5, 6, 7 or 8.

Fig. 5 is a characteristic diagram showing the changes of the resistance of the individual pressure sensitive element 13a, 13b, 13c or 13d in the thickness direction, in which the pressing force can be known by measuring the resistance of the pressure sensitive element 13a, 13b, 13c or 13d, for example, the pressing force is 200 g if the resistance of the pressure sensitive element 13a, 13b, 13c or 13d in the thickness direction is 10 kΩ, or the pressing force is 400 g if the resistance is 5.9 kΩ. That is, by measuring the resistance, the pressing force can be recognized.

Incidentally, as shown in Fig. 4, the position input device of the invention incorporates an A/D converter, and also possesses a one-chip microcomputer in which the procedure for processing the digital data obtained by the A/D converter is written into a memory unit (ROM), and this microcomputer possesses, as shown in Fig. 6, a table for converting the digital data obtained by the A/D converter into the operating force received by the operation lever or the moving speed corresponding to this operating force.

Fig. 7 shows a characteristic diagram showing the changes of the resistance of the pressure sensitive element 13a, 13b, 13c or 13d in the thickness direction by the force in the thickness direction, and changes of the voltage for A/D conversion, and the A/D converted value as shown in Fig. 7 is obtained by A/D conversion. By converting it into the operating force as shown in Fig. 6 by using the table, the pressing force is known.

The operation of the position input device of the embodiment having such constitution is explained below by reference to Fig. 8.

When the operation lever 15 is pressed with a force F, forces Fa, Fb, Fc and Fd corresponding to the pushing positions are applied to the spherical protrusions 14a provided at four positions of the pressing plate 14. In particular, a downward force is applied to the pressure sensitive elements 13a, 13b, so that the resistance value decreases according to the characteristic diagram in Fig. 5.

That is, by measuring the resistance of the four pressure sensitive elements 13a, 13b, 13c, and 13d, the "direction" and "magnitude of force" showing what force is applied in which direction can be known.

Besides, as shown in Fig. 9 (a), (b), since the operation lever 15 and pressing plate 14 are composed of different parts, when the operation lever 15 is manipulated by applying a force F, the operation lever 15 is inclined by θ, but the operation iever 15 slides on the pressing plate 14 to press, for example, the pressure sensitive elements 13a, 13b, 13c and 13d immediately beneath the protrusion 14a of the pressing plate 14, so that position deviation does not occur, and thereby a proper operating force can be applied.

Fig. 11 shows a position input device having a spacer 21 placed between a lower film 9 and an upper film 12, together with pressure sensitive elements 13a, 13b, 13c and 13d, in which a certain clearance is set until the pressure sensitive elements 13d, 13b, 13c and 13d are actually pushed, so that errors due to slignt contact with the operation lever 15 may be avoided.

In fig. 12, the pressure sensitive elements 13a, 13b, 13c and 13d are changed in resistance in the thickness direction by the pressing force, and by making use of the fact that the resistance in the plane direction is extremely large so that the change in its resistance can be ignored, the pressure sensitive element is composed of one piece by providing a connecting part 22, without separating into individual pressure sensitive elements, so that the number of steps in assembling is reduced to 1/4.

Incidentally, the lower film 9 may be replaced by a printed wiring board which is a rigid body.

Fig. 13 (a) and (b) relate to an input apparatus of the invention, in which the position input device of the invention is built in the input apparatus possessing plural input keys such as a full keyboard of a personal computer. The height of the operation lever 15 is same as the height of the adjacent peripheral input keys 15a, or set slightly higher, and it can be very easily manipulated by the finger of the operation.

Figs. 14, 15 and 16 show pointing devices of other embodiments of the position input device of the invention, and specifically in Fig. 14, a protrusion 14d is provided on the circumference of the pressing plate 14, and by assembling the protrusion 14d by matching with a guide groove 19 of the main body case (not shown), the protrusion 14d provided on the pressing plate 14 and the pressure sensitive elements 13a, 13b, 13c and 13d can be positioned easily.

The embodiment shown in Figs. 15 and 16 has the same purpose as the embodiment shown in Fig. 14, and Fig. 15 shows an example of providing markings 20 on both main body case (not shown) and pressing plate 14, and Fig. 16 shows an example in which the outer shape of the pressing plate 14 is square, and the inside corners of the main body case (not shown) are assembled so that pressure sensitive elements 13a, 13b, 13c and 13d and the pressing plate 14 may be watched, as being guided by the pressing plate 14.

## Claims

1. A position input device comprising a lower film (9) disposing four independent electrodes (1,2,3,4,) in four individual directions, an upper film (12) disposing a common electrode (10) confronting said independent electrodes, four pressure sensitive elements (13a,13b,13c,13d), each pressure sensitive element having a variable resistance, and each

pressure sensitive element being disposed between a respective said independent electrode and said common electrode (10), a pressing plate (14) having an upper surface formed from a single member such that said upper surface forms a continuous, substantially flat surface, said pressing plate possessing protrusions (14a) at the positions for pressing said four pressure sensitive elements corresponding to said independent electrodes (1,2,3,4), and an operational lever (15) for manipulating said pressing plate (14), said operational lever being formed separately from said pressing plate, and being movable relative to said pressing plate, said operational lever having a lower surface formed from a single member such that said lower surface forms a continuous, substantially flat surface which engages said pressing plate,
wherein the resistance of each of said four pressure sensitive elements is measured during a given measurement to detect all the directions in which the operating lever (15) is manipulated.

**2.** A position input device of claim 1, wherein a rigid printed wiring board is used instead of the tower film.

**3.** A position input device of claim 1, wherein a spacer is disposed between the pressure sensitive elements so that the pressure sensitive elements may not be pushed in other time than in operation.

**4.** A position input device of claim 1, wherein pressure pressure sensitive rubber is used as pressure sensitive elements.

**5.** A position input device of claim 1, wherein pressure sensitive rubber is used as pressure sensitive elements, and the individual pressure sensitive elements are formed into one body with the connecting parts.

**6.** A position input device of claim 1, comprising an A/D converter connected to the independent electrodes, and an operating unit connecting a memory unit in which the procedure for processing the digital data obtained by the A/D converter is written, wherein the memory unit possesses a table for converting the digital data obtained by the A/D converter into an operating force of the operation lever or a moving speed corresponding to the operating force of the operation level.

**7.** An input apparatus using a position input device of claim 1, possessing plural input keys, and an operation lever set at a same height of the input keys or slightly higher, adjacently to the input keys.

**Patentansprüche**

**1.** Positionseingabevorrichtung mit einer unteren Schicht (9) mit vier unabhängigen Elektroden (1, 2, 3, 4) in vier unabhängigen Richtungen, einer oberen Schicht (12) mit einer gemeinsamer Elektrode (10), die den unabhängigen Elektroden gegenübersteht, vier druckempfindlichen Elementen (13a, 14b, 13c 13d), wobei jedes druckempfindliche Element einen variablen Widerstand aufweist und jedes druckempfindliche Element zwischen den unabhängigen Elektroden und der gemeinsamen Elektrode angeordnet ist, einer Druckplatte (14) mit einer aus einem einzigen Glied gebildeten oberen Oberfläche, so daß die obere Oberfläche eine kontinuierliche, im wesentlichen flache Oberfläche bildet, wobei die Druckplatte Vorsprünge (14a) an den Positionen zum Drücken der vier druckempfindlichen Elemente, die den unabhängigen Elektroden (1, 2, 3, 4) entsprechen, aufweist, und einem Betätigungshebel (15) zum Manipulieren der Druckplatte (14), wobei der Betätigungshebel separat von der Druckplatte gebildet und relativ zu der Druckplatte beweglich ist, und wobei der Betätigungshebel eine aus einem einzigen Glied gebildete untere Oberfläche aufweist, so daß die untere Oberfläche eine kontinuierliche, im wesentlichen flache Oberfläche bildet, die mit der Druckplatte in Verbindung steht,
wobei der Widerstand jedes druckempfindlichen Elements während einer gegebenen Messung gemessen wird, um alle Richtungen festzustellen, in denen der Betätigungshebel (15) manipuliert wird.

**2.** Positionseingabevorrichtung nach Anspruch 1, wobei eine starre gedruckte Schaltungsplatte anstatt der unteren Schicht verwendet werden kann.

**3.** Positionseingabevorrichtung nach Anspruch 1, wobei ein Trennstück zwischen die druckempfindlichen Elemente angeordnet ist, damit die druckempfindlichen Elemente außer während der Betätigung nicht gedrückt werden können.

**4.** Positionseingabevorrichtung nach Anspruch 1, wobei druckempfindlicher Kautschuk für die druckempfindlichen Elemente verwendet wird.

**5.** Positionseingabevorrichtung nach Anspruch 1, wobei druckempfindlicher Kautschuk für die druckempfindlichen Elemente verwendet wird, und wobei die einzelnen druckempfindlichen Elemente mit Verbindungsteilen als ein Körper gebildet werden.

**6.** Positionseingabevorrichtung nach Anspruch 1, die einen mit den unabhängigen Elektroden verbundenen A/D-Umsetzer und eine Betriebseinheit umfaßt, die mit einer Speichereinheit verbunden ist, in

die die Prozedur für das Verarbeiten der durch den A/D-Umsetzer erhaltenen digitalen Daten geschrieben ist, wobei die Speichereinheit eine Tabelle für das Umwandeln der durch den A/D-Umsetzer erhaltenen digitalen Daten in eine Betätigungskraft des Betätigungshebels oder in eine der Betätigungskraft des Betätigungshebels entsprechende Bewegungsgeschwindigkeit aufweist.

**7.** Eingabevorrichtung, die die Positionseingabevorrichtung nach Anspruch 1 verwendet, mehrere Eingabetasten und einen Betätigungshebel aufweist, der auf derselben Höhe wie die Eingabetasten oder etwas höher als diese und in Nachbarschaft zu den Eingabetasten plaziert ist.

**Revendications**

**1.** Dispositif d'entrée de position comprenant une couche inférieure (9) où sont disposées quatre électrodes indépendantes (1, 2, 3, 4) dans quatre directions individuelles, une couche supérieure (12) où est disposée une électrode commune (10) en face desdites électrodes indépendantes, quatre éléments sensibles à la pression (13a, 13b, 13c, 13d), chaque élément sensible à la pression ayant une résistance variable, et chaque élément sensible à la pression étant disposé entre une dite électrode indépendante respective et une dite électrode commune (10), une plaque de pression (14) ayant une surface supérieure formée d'un élément unique tel que ladite surface supérieure forme une surface continue, sensiblement plate, ladite plaque de pression possédant des parties en saillie (14a) dans les positions destinées à presser lesdits quatre éléments sensibles à la pression correspondant auxdites électrodes indépendantes (1, 2, 3, 4), et un levier fonctionnel (15) pour manipuler ladite plaque de pression (14), ledit levier fonctionnel étant formé séparément de ladite plaque de pression, et étant mobile par rapport à ladite plaque de pression, ledit levier fonctionnel ayant une surface inférieure formée d'un élément unique tel que ladite surface inférieure forme une surface continue, sensiblement plate, s'engageant avec ladite plaque de pression,

dans lequel la résistance de chacun desdits quatre éléments sensibles à la pression est mesurée lors d'une mesure donnée pour détecter toutes les directions dans lesquelles le levier fonctionnel (15) est manipulé.

**2.** Dispositif d'entrée de position selon la revendication 1, dans lequel une carte de câblage imprimé rigide est utilisée en remplacement de la couche inférieure.

**3.** Dispositif d'entrée de position selon la revendication 1, dans lequel une entretoise est disposée entre les éléments sensibles à la pression, de façon que les éléments sensibles à la pression ne puissent pas être poussés à un autre moment qu'en fonctionnement.

**4.** Dispositif d'entrée de position selon la revendication 1, dans lequel du caoutchouc sensible à la pression est utilisé comme éléments sensibles à la pression.

**5.** Dispositif d'entrée de position selon la revendication 1, dans lequel du caoutchouc sensible à la pression est utilisé comme éléments sensibles à la pression, et les éléments sensibles à la pression individuels sont formés en un corps avec les pièces de connexion.

**6.** Dispositif d'entrée de position selon la revendication 1, comprenant un convertisseur A/N connecté aux électrodes indépendances, et une unité fonctionnelle connectée à une unité de mémoire tans laquelle la procédure pour traiter les données numériques obtenues par le convertisseur A/N est écrite, dans lequel l'unité de mémoire possède un tableau pour convertir les données numériques obtenues par le convertisseur A/N en une force fonctionnelle du levier fonctionnel ou une vitesse de déplacement correspondant à la force fonctionnelle du levier fonctionnel.

**7.** Appareil d'entrée utilisant un dispositif d'entrée de position selon la revendication 1, traitant plusieurs touches d'entrée, et un levier fonctionel mis à la même hauteur que les touches d'entrée ou légèrement plus haut, de manière adjacente aux touches d'entrée.

Fig. 1

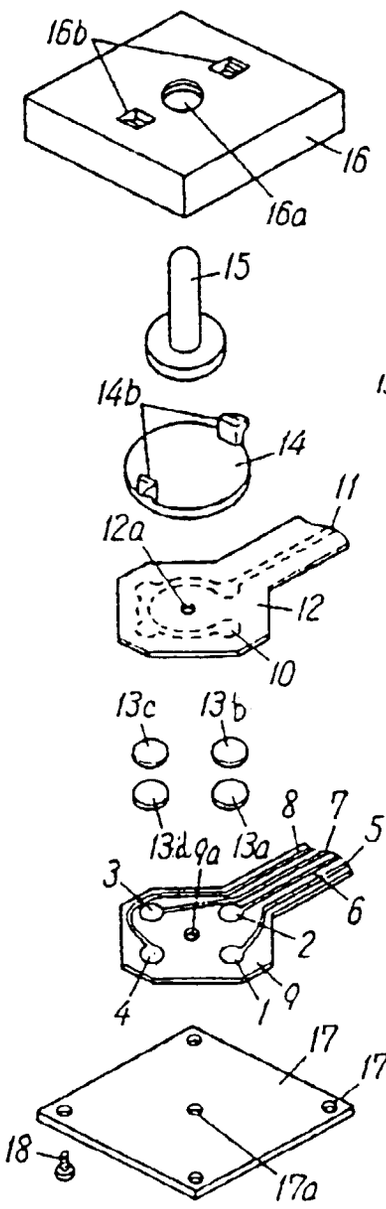


1-4 Electrodes
9, 12 Films
10 Common electrode
13a-13d Pressure sensitive rubber
14 Pressing plate
15 Operation lever

Fig. 2

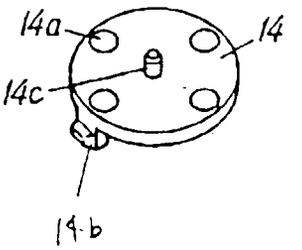


Fig. 3

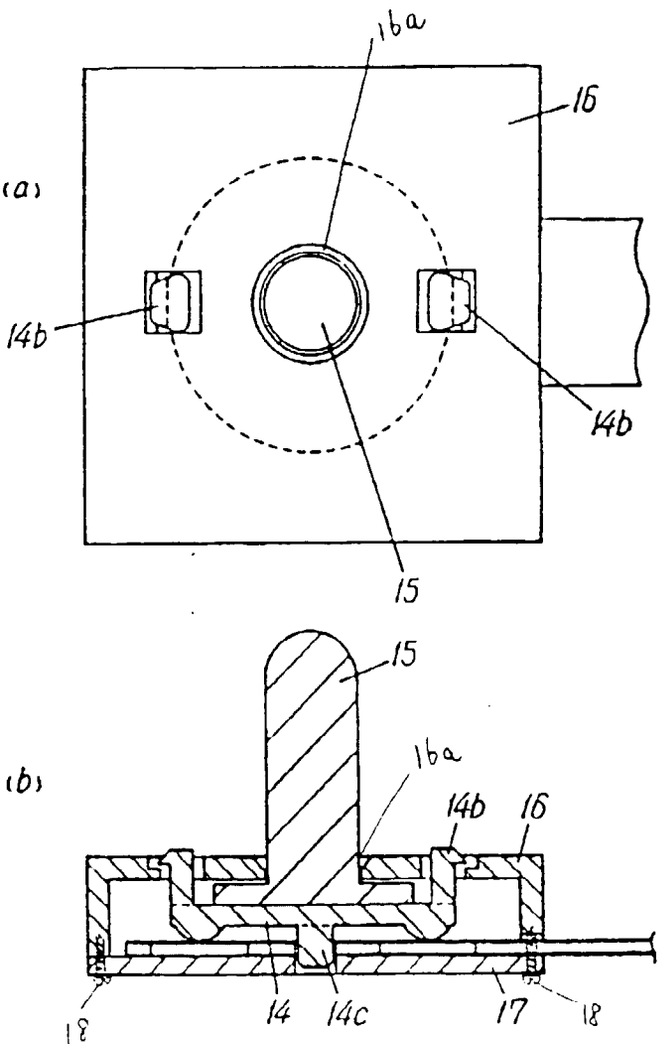

Fig. 4

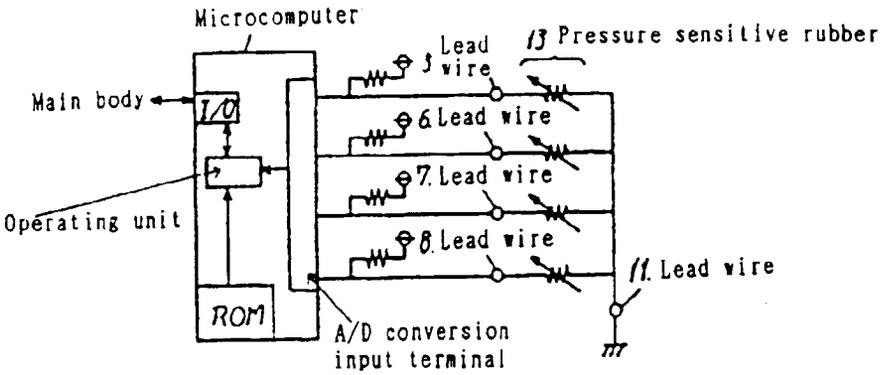


Fig. 5

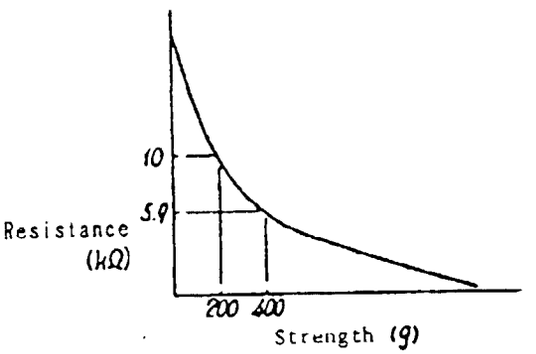


Fig. 6

| A/D value | Table value | Address |
|---|---|---|
| 0 | [illegible] | N, N+1 |
| 137 | [illegible] | N+274, N+275 |
| 153 | 2700 | N+306, N+307 |
| 255 | 0 | N+510, N+511 |

Fig. 7

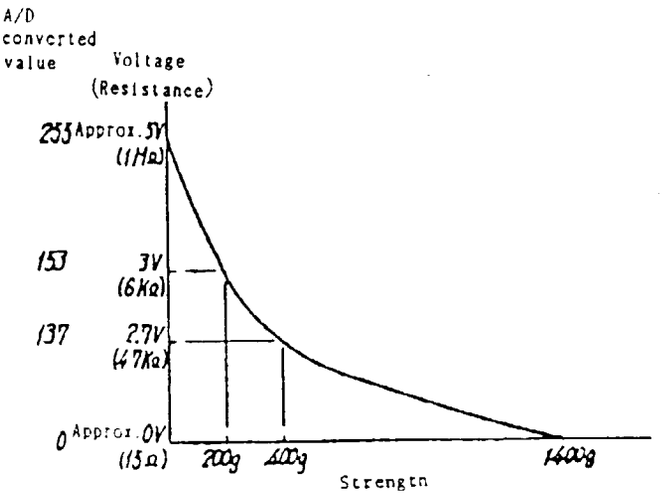
A/D
converted
value
Voltage
(Resistance)
255
Approx. 5V
(1MΩ)
153
3V
(6KΩ)
137
2.7V
(4.7KΩ)
0
Approx. 0V
(15Ω)
200g
400g
1400g
Strength

Fig. 8

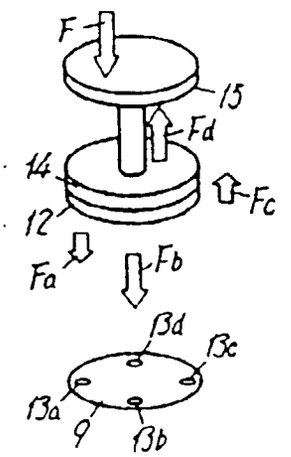
F
15
Fd
14
Fc
12
Fa
Fb
13d
13c
13a
9
13b

Fig. 9

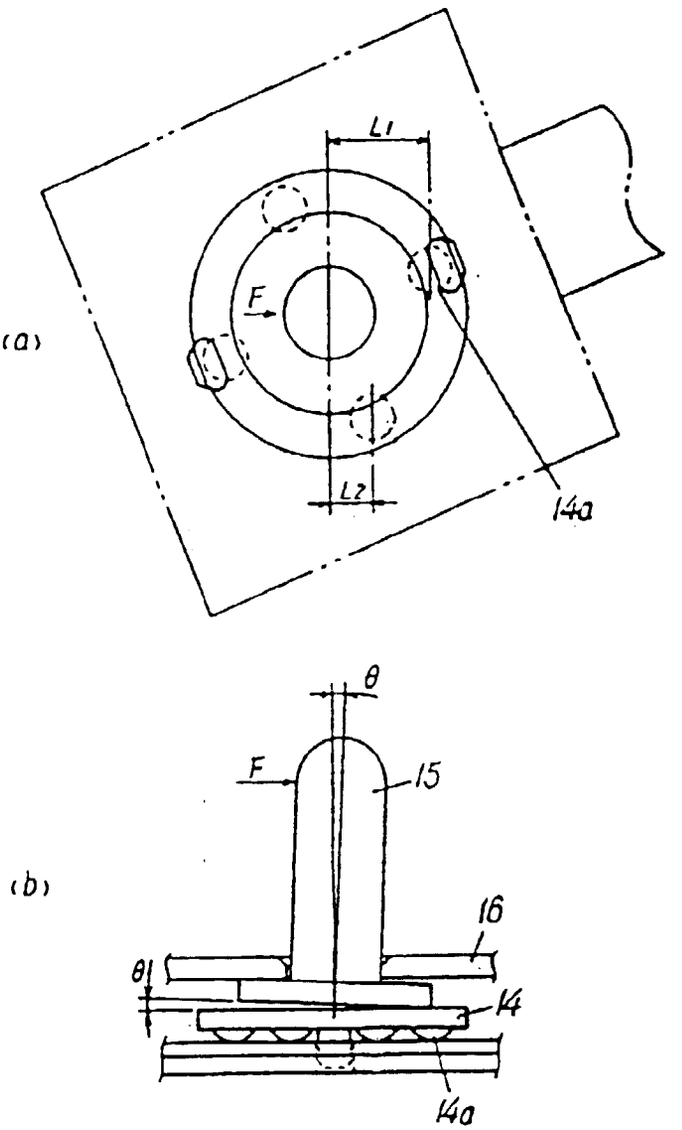

Fig. 11

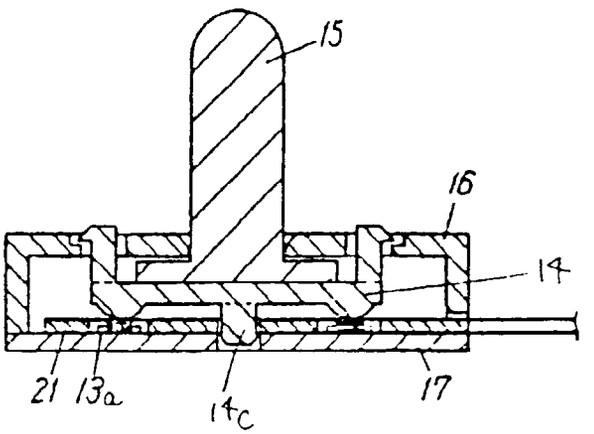


Fig. 12

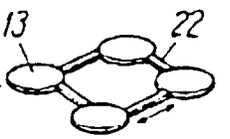

Fig. 13

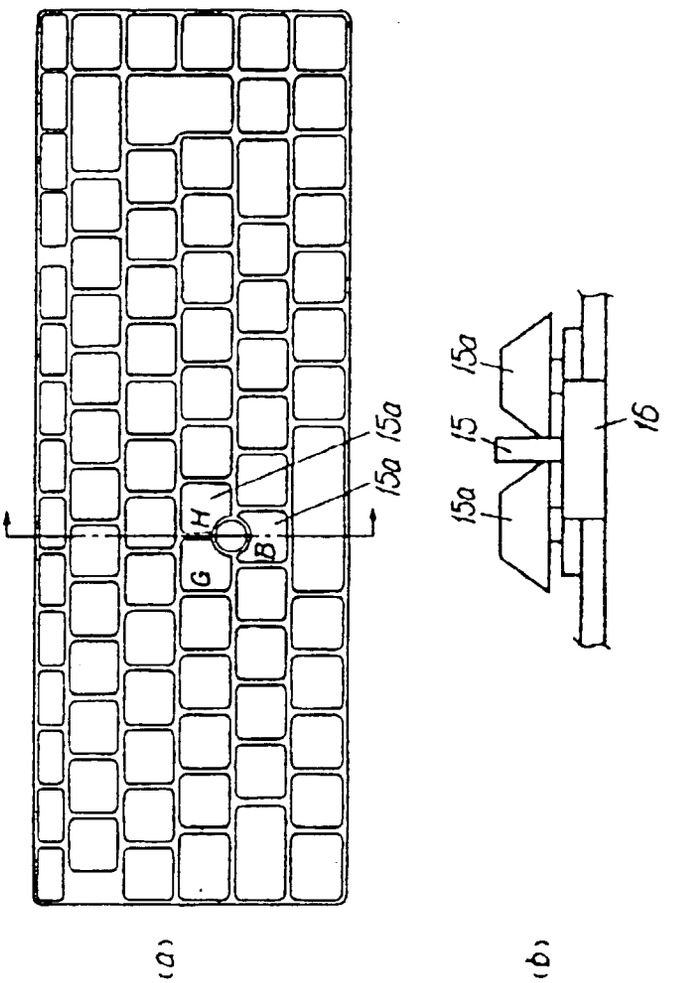

Fig. 14

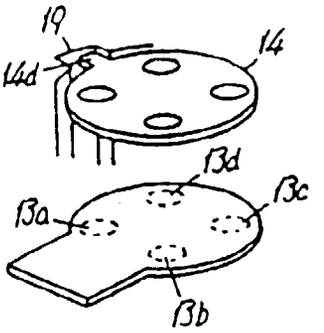


Fig. 15

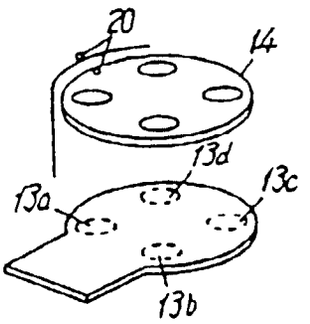


Fig. 16

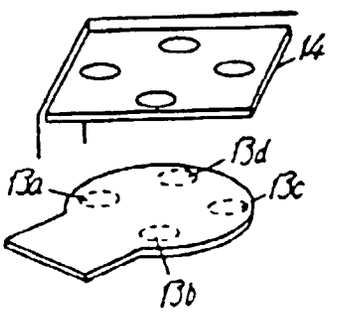

Fig. 17

