Innovation, Sciences et Développement économique Canada
Office de la Propriété Intellectuelle du Canada

Innovation, Science and Economic Development Canada
Canadian Intellectual Property Office

CA 3121521 A1 2020/06/04

(21) 3 121 521

(12) DEMANDE DE BREVET CANADIEN
CANADIAN PATENT APPLICATION

(13) A1

(86) Date de dépôt PCT/PCT Filing Date: 2019/11/29
(87) Date publication PCT/PCT Publication Date: 2020/06/04
(85) Entrée phase nationale/National Entry: 2021/05/28
(86) N° demande PCT/PCT Application No.: US 2019/063870
(87) N° publication PCT/PCT Publication No.: 2020/113177
(30) Priorités/Priorities: 2018/11/29 (US62/772,783); 2019/02/07 (US62/802,216); 2019/03/05 (US62/814,102); 2019/10/22 (US62/924,598)

(51) Cl.Int./Int.Cl. *A61C 15/04* (2006.01), *A61C 15/00* (2006.01)
(71) Demandeurs/Applicants:
ANDERSEN, LEONHARDT, US;
MOROSKY, WILLIAM, US

(72) Inventeurs/Inventors:
ANDERSEN, LEONHARDT, US;
MOROSKY, WILLIAM, US

(74) Agent: MARKS & CLERK

(54) Titre : OUTIL FIL DENTAIRE
(54) Title: FLOSSING TOOL

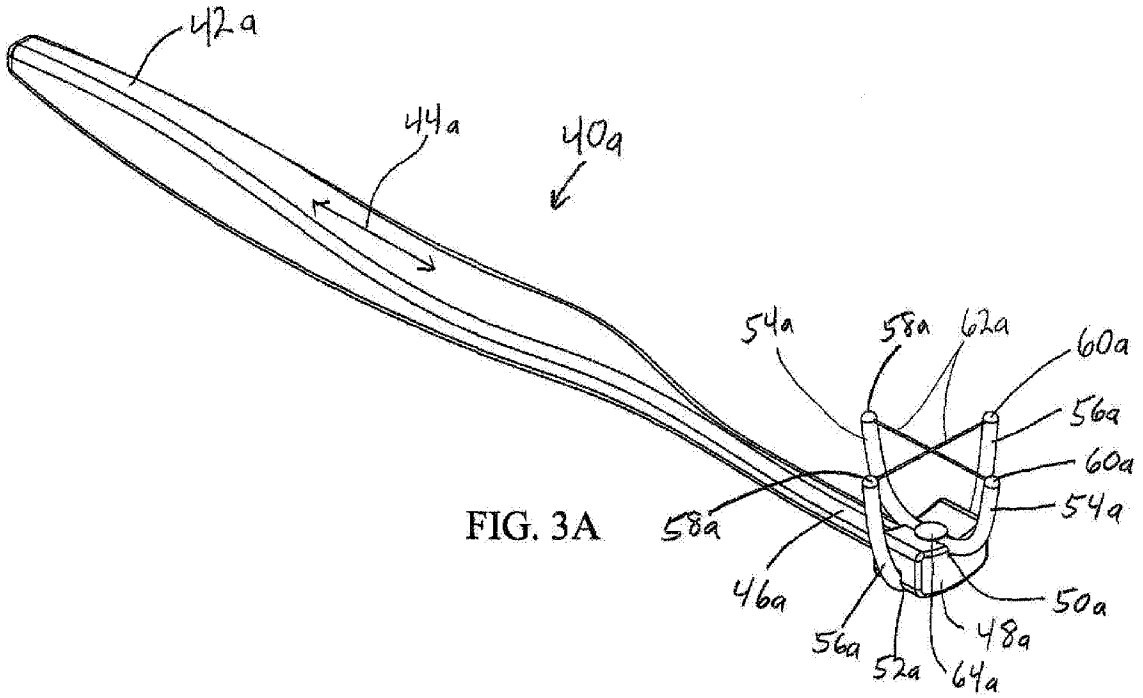

FIG. 3A

(57) Abrégé/Abstract:
An adjustable flossing tool includes a tool body having a major tool axis and a headstock. At least one string positioner having first and second positioner arms is positioned on the headstock. A floss string extends from the first positioner ami to the second positioner arm of each string positioner. Adjustment can be made to position the first string in a first string position in parallel to or at an angle to the major tool axis. Adjustment can also be made to position the first string to a second string position, the second string position being different from the first string position relative to the major tool axis.

(12) INTERNATIONAL APPLICATION PUBLISHED UNDER THE PATENT COOPERATION TREATY (PCT)

(19) World Intellectual Property Organization
International Bureau

(43) International Publication Date
04 June 2020 (04.06.2020)

WIPO | PCT

(10) International Publication Number
WO 2020/113177 A1

(51) International Patent Classification:
A61C 15/00 (2017.01) *A61C 15/04* (2006.01)

(21) International Application Number:
PCT/US2019/063870

(22) International Filing Date:
29 November 2019 (29.11.2019)

(25) Filing Language: English

(26) Publication Language: English

(30) Priority Data:

62/772,783	29 November 2018 (29.11.2018)	US
62/802,216	07 February 2019 (07.02.2019)	US
62/814,102	05 March 2019 (05.03.2019)	US
62/924,598	22 October 2019 (22.10.2019)	US

(72) Inventors; and
(71) Applicants: **ANDERSEN, Leonhardt** [US/US]; 417 West Front Street, Erie, PA 16507 (US). **MOROSKY, William** [US/US]; 3710 Volkman Road, Erie, PA 16506 (US).

(74) Agent: **WOODARD, Jon**; Woodard International Law, 3514 State Street, Erie, PA 16508-2834 (US).

(81) Designated States *(unless otherwise indicated, for every kind of national protection available)*: AE, AG, AL, AM, AO, AT, AU, AZ, BA, BB, BG, BH, BN, BR, BW, BY, BZ, CA, CH, CL, CN, CO, CR, CU, CZ, DE, DJ, DK, DM, DO, DZ, EC, EE, EG, ES, FI, GB, GD, GE, GH, GM, GT, HN, HR, HU, ID, IL, IN, IR, IS, JO, JP, KE, KG, KH, KN, KP, KR, KW, KZ, LA, LC, LK, LR, LS, LU, LY, MA, MD, ME, MG, MK, MN, MW, MX, MY, MZ, NA, NG, NI, NO, NZ, OM, PA, PE, PG, PH, PL, PT, QA, RO, RS, RU, RW, SA, SC, SD, SE, SG, SK, SL, SM, ST, SV, SY, TH, TJ, TM, TN, TR, TT, TZ, UA, UG, US, UZ, VC, VN, ZA, ZM, ZW.

(84) Designated States *(unless otherwise indicated, for every kind of regional protection available)*: ARIPO (BW, GH, GM, KE, LR, LS, MW, MZ, NA, RW, SD, SL, ST, SZ, TZ, UG, ZM, ZW), Eurasian (AM, AZ, BY, KG, KZ, RU, TJ, TM), European (AL, AT, BE, BG, CH, CY, CZ, DE, DK, EE, ES, FI, FR, GB, GR, HR, HU, IE, IS, IT, LT, LU, LV, MC, MK, MT, NL, NO, PL, PT, RO, RS, SE, SI, SK, SM, TR), OAPI (BF, BJ, CF, CG, CI, CM, GA, GN, GQ, GW, KM, ML, MR, NE, SN, TD, TG).

Declarations under Rule 4.17:
— *of inventorship (Rule 4.17(iv))*

(54) Title: FLOSSING TOOL

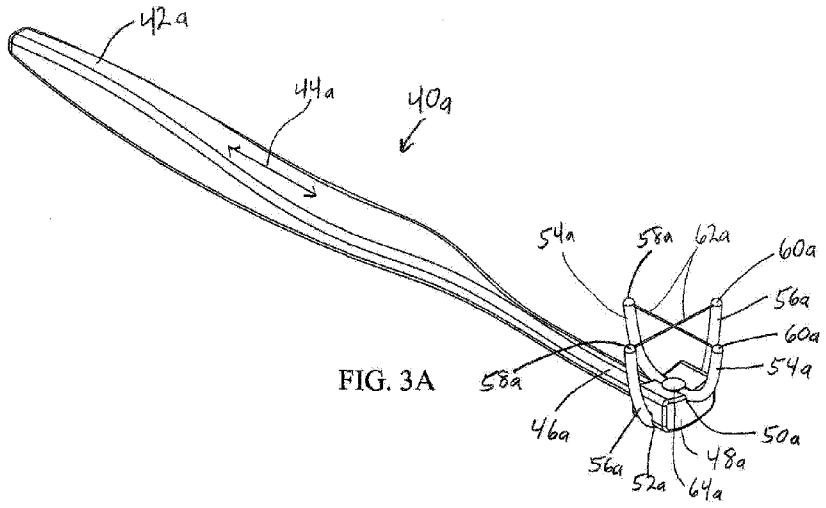

FIG. 3A

(57) Abstract: An adjustable flossing tool includes a tool body having a major tool axis and a headstock. At least one string positioner having first and second positioner arms is positioned on the headstock. A floss string extends from the first positioner ami to the second positioner arm of each string positioner. Adjustment can be made to position the first string in a first string position in parallel to or at an angle to the major tool axis. Adjustment can also be made to position the first string to a second string position, the second string position being different from the first string position relative to the major tool axis.

WO 2020/113177 A1

[Continued on next page]

WO 2020/113177 A1

Published:
— *with international search report (Art. 21(3))*

FLOSSING TOOL

BACKGROUND

[0001] Flossing tools are used to enable users to more easily and effectively floss to remove food particles and plaque from between teeth and gums. However, prior flossing tools are limited in their utility in that they do not allow for the accommodation of different or variable flossing angles.

[0002] Referring to the drawings, FIG. 1 depicts a flossing tool **2** of the prior art having a handle or tool body **4** defining a major tool axis **8** and a first distal end **10**. A first arm **12** and a second arm **14** extend from the first distal end **10**. A first floss string **16** and a second floss string **18** extend between the first and second arms **12** and **14** for the flossing function. Although positioned at an angle from the major tool axis **8**, the floss strings **16** and **18** cannot be adjusted from this angle relative to the major tool axis **8**. As a result, the tool **2** may not allow for optimum flossing positioning for all teeth or flossing circumstances.

[0003] FIG. 2 depicts a flossing tool **19** of the prior art also having a handle or tool body **20** defining a major tool axis **22** and a first distal end **24** having a headstock **28**. The headstock **28** includes a female locking keyslot (not shown in FIG. 2) allowing for the locking engagement of a removable string positioner **26** (shown both attached to the headstock **28** of the flossing tool **19** and removed therefrom in FIG. 2) with a male key segment **36**. However, when the string positioner **26** is attached to the flossing tool **19**, the first positioner arm **32** and second positioner arm **34** orient the single floss string **30** at a locked, roughly perpendicular position relative to the major tool axis **22**. Thus, while the string positioner **26** is attached to the flossing tool **19** and in this locked position, no further adjustment of the position of the string **30** relative the major tool axis **22** is possible to optimize flossing.

SUMMARY OF THE INVENTION

[0004] An adjustable flossing tool comprises a tool body having a major tool axis, the tool body having a first distal tool end and a headstock positioned at or near the first distal tool end. One or more string positioners having first and second positioner arms are positioned on the headstock. One or more floss strings are positioned to extend between the first and second positioner arms.

[0005] The headstock allows one or more string positioner to position a floss string in a first string position in parallel to or at an angle to the major tool axis. The headstock allows for tool adjustment, allowing at least one string positioner to position its floss string in a second string position in parallel

to or at an angle to the major tool axis, the second string position being a different position than the first string position relative to the major tool axis.

[0006] In embodiments having two or more string positioners, at least one of the string positioners is positioned on the headstock. The string positioners may allow the floss strings to be positioned at 90 degrees to each other or at other angles relative to each other and/or to the major tool axis. The string positioners may be adjustable in their angles with respect to the major tool axis either by being removable and replaceable or by attached adjustment such as by rotation about either a shared or separate axes or pivots.

BRIEF DESCRIPTION OF THE DRAWINGS

[0007] For a more complete understanding and appreciation of this invention, and its many advantages, reference will be made to the following Detailed Description taken in conjunction with the accompanying drawings.

[0008] FIG. 1 depicts a flossing tool of the prior art;

[0009] FIG. 2 depicts a flossing tool of the prior art;

[0010] FIG. 3A depicts a perspective view of a flossing tool according to one embodiment of the invention;

[0011] FIG. 3B depicts a top view of the flossing tool of FIG. 3A;

[0012] FIG. 4 depicts a closeup top perspective view of the flossing tool of FIG. 3A;

[0013] FIG. 4A depicts a front view of a floss positioner according to one embodiment of the invention;

[0014] FIG. 4B depicts a side view of the floss positioner of FIG. 4A;

[0015] FIG. 5 depicts a closeup bottom perspective view of the flossing tool of FIG. 3A;

[0016] FIG. 6A depicts a top perspective view of a flossing tool according to one embodiment of the invention;

[0017] FIG. 6B depicts a bottom perspective view of a flossing tool according to one embodiment of the invention;

[0018] FIG. 6C depicts a perspective view of the floss positioner of FIG 6A;

[0019] FIG. 6D depicts a perspective view of the floss positioner of FIG. 6B;

[0020] FIG. 6E depicts a perspective view of a floss positioner according to one embodiment of the invention;

[0021] FIG. 6F depicts a perspective view of a floss positioner according to one embodiment of the invention;

[0022] FIG. 6G depicts a top perspective view of a flossing tool according to one embodiment of the invention;

[0023] FIG. 6H depicts a top view of a flossing tool according to one embodiment of the invention;

[0024] FIG. 7A depicts a closeup top perspective view of a flossing tool according to one embodiment of the invention;

[0025] FIG. 7B depicts a closeup top perspective view of the flossing tool of FIG. 7A;

[0026] FIG. 8 depicts a closeup top perspective view of a flossing tool according to one embodiment of the invention;

[0027] FIG. 9 depicts a closeup top perspective view of a flossing tool according to one embodiment of the invention;

[0028] FIG. 10A depicts a closeup top perspective view of a flossing tool according to one embodiment of the invention;

[0029] FIG. 10B depicts a closeup bottom perspective view of a flossing tool according to one embodiment of the invention;

[0030] FIG. 11A depicts string positioner and string arrangement according to one embodiment of the invention;

[0031] FIG. 11B depicts string positioner and string arrangement according to one embodiment of the invention;

[0032] FIG. 11C depicts string positioner and string arrangement according to one embodiment of the invention;

[0033] FIG. 11D depicts string positioner and string arrangement according to one embodiment of the invention;

[0034] FIG. 11E depicts string positioner and string arrangement according to one embodiment of the invention;

[0035] FIG. 11F depicts string positioner and string arrangement according to one embodiment of the invention;

[0036] FIG. 11G depicts string positioner and string arrangement according to one embodiment of the invention;

[0037] FIG. 11H depicts string positioner and string arrangement according to one embodiment of the invention;

[0038] FIG. 11-I depicts string positioner and string arrangement according to one embodiment of the invention;

[0039] FIG. 11J depicts string positioner and string arrangement according to one embodiment of the invention;

[0040] FIG. 11K depicts string positioner and string arrangement according to one embodiment of the invention;

[0041] FIG. 11L depicts string positioner and string arrangement according to one embodiment of the invention;

[0042] FIG. 11M depicts string positioner and string arrangement according to one embodiment of the invention;

[0043] FIG. 11N depicts string positioner and string arrangement according to one embodiment of the invention;

[0044] FIG. 11-O depicts string positioner and string arrangement according to one embodiment of the invention;

[0045] FIG. 11P depicts string positioner and string arrangement according to one embodiment of the invention;

[0046] FIG. 11Q depicts string positioner and string arrangement according to one embodiment of the invention;

[0047] FIG. 11R depicts string positioner and string arrangement according to one embodiment of the invention;

[0048] FIG. 11S depicts string positioner and string arrangement according to one embodiment of the invention;

[0049] FIG. 11T depicts string positioner and string arrangement according to one embodiment of the invention;

[0050] FIG. 12A depicts a side view of a flossing tool according to one embodiment of the invention;

[0051] FIG. 12B depicts a top view of a flossing tool according to one embodiment of the invention;

[0052] FIG. 13 depicts a closeup side view of a flossing tool according to one embodiment of the invention;

[0053] FIG. 14 depicts a closeup side view of a flossing tool according to one embodiment of the invention;

[0054] FIG. 15 depicts a closeup side view of a flossing tool according to one embodiment of the invention;

[0055] FIG. 16 depicts a closeup side view of a flossing tool according to one embodiment of the invention;

[0056] FIG. 17 depicts a side view of a flossing tool according to one embodiment of the invention positioned to floss a user's teeth and gums;

[0057] FIG. 18 depicts a side view of a flossing tool according to one embodiment of the invention positioned to floss a user's teeth and gums;

[0058] FIG. 19 depicts a top perspective view of a flossing tool according to one embodiment of the invention;

[0059] FIG. 20 depicts a top perspective view of the flossing tool of FIG. 19;

[0060] FIG. 21 depicts a top view of the flossing tool of FIG. 19;

[0061] FIG. 22 depicts a top view of the flossing tool of FIG. 19;

[0062] FIG. 23 depicts a top perspective view of a flossing tool according to one embodiment of the invention; and

[0063] FIG. 24 depicts a perspective view of a flossing tool according to one embodiment of the invention.

DETAILED DESCRIPTION OF THE INVENTION

[0064] Referring to the drawings, similar reference numerals are used to designate the same or corresponding parts throughout the several embodiments and figures. In some drawings, some specific embodiment variations in corresponding parts are denoted with the addition of lower case letters to reference numerals.

[0065] FIGS. 3A and 3B depict a flossing tool **40a** having a handle or tool body **42a** defining a major tools axis **44a** and a first distal end **46a**. The tool body **42a** has a headstock **48a** positioned at the first distal end **46a**. Comparing FIGS. 3A and B with the close up perspective view of the first distal end **46a** in FIG. 4, the headstock **48a** includes a forward female positioning slot **50a** and a back female positioning slot **52a**. A first string positioner **54a** and second string positioner **56a** are positioned on the headstock **48a**, each including a first positioner arm **58a** and second positioner arm **60a** and a floss string **62a**

[0066] With brief reference to the front view of the second string positioner **56a** in FIG. 4A and the side view of the same second string positioner **56a** in FIG. 4B, the floss string **62a** extends from the first positioner arm **58a** to the second positioner arm **60a**. Male keying **64a** is shaped into the second string positioner **56a** at the location of connection between the first positioner arm **58a** and second positioner arm **60a**.

[0067] As best understood by comparing FIGS. 4A and 4B with FIGS. 4 and 5, the male keying **64a** of the second string positioner **56a** allows for lockable positioning of the second string positioner **56a** within the back female positioning slot **52a** of the headstock **48a**. Similarly, the male keying **64a** of the first string positioner **54a** allows for lockable positioning of the first string positioner **54a** within the forward female positioning slot **50a** of the headstock **48a**. This configuration allows both first and second string positioners **54a** and **56a** to be removable and easily re-installed in a locked position in

the headstock **48a**. When installed in their respective female positioning slots **50a** and **52a** as shown in FIGS. 4A and 4B, the string positioners **54a** and **56a** position their floss strings **62a** in approximately perpendicular positions, and both floss strings **62a** remain locked in such positions relative the major tool axis **44a**.

[0068] Although the embodiment of FIGS. 3A-5 has been shown and described with first and second string positioners **54a** and **56a** positioning strings **62a** approximately perpendicularly at approximately 90-degree angles from each other, it will be appreciated that the invention contemplates adjustment of the flossing tool **40a** by removal and replacement of the first and/or second string positioners **54a** and/or **56a**. For example, FIG. 6A depicts a perspective view of a flossing tool **40b** similar to the flossing tool **40a** of FIGS. 3A-5, having a first string positioner **54b** and a second string positioner **56b**, the second string positioner **56b** with a first positioner arm **58b** and second positioner arm **60b** each having a clockwise bend **66b**. As best understood by comparing FIG. 6A with its removed first string positioner **54b** depicted in FIG. 6C, the clockwise bends **66b** of the positioner arms **58b** and **60b** result in a clockwise directional twist of the floss string **62b** relative to the major tool axis **44b**. The male keying **64b** of the second string positioner **56b** allows for removable and replaceable locking engagement of the back female positioning slots **52b** in the headstock **48b**. Thus, replacing the second string positioner **56a** of FIGS 3A, 3B, 4, and 5 with the second string positioner **56b** of FIGS. 6A and 6C allows for tool adjustment and repositioning of the floss string **62b** relative to the major tool axis **44b**.

[0069] Opposite adjustment can also be achieved from removal and replacement of a second string positioner with opposite bends. For example, FIG. 6B depicts a top view of a flossing tool **40c** similar to the flossing tool **40a** of FIGS. 3A, 3B, 4, and 5 having a second string positioner **56c** with a first positioner arm **58c** and second positioner arm **60c** each having a counterclockwise bend **68c**. As best understood by comparing FIG. 6B with its removed second string positioner **56c** depicted in FIG. 6D, the counterclockwise bends **68c** of the positioner arms **58c** and **60c** result in a counterclockwise directional twist of the floss string **62c** relative to the major tool axis **44c**. The male keying **64c** of the second string positioner **56c** allows for removable and replaceable locking engagement of the back female positioning slots **52c** in the headstock **48c**. Thus, replacing the second string positioner **56a** of FIGS 3A, 3B, 4, and 5 with the second string positioner **56c** of FIGS. 6B and 6D allows for tool adjustment and repositioning of the floss string **62c** relative to the major tool axis **44c**.

[0070] Although the invention has been shown and described as having multiple floss positioners, it will be appreciated that embodiments utilizing a single floss positioner are within the anticipated scope of the invention. For example, FIG. 6E depicts a flossing tool **40j** of the invention having a first string positioner **54j** locked into position by the forward female positioning slot **50j** of the headstock **48j**. The first positioning arm **58j** and second positioning arm **60j** have counterclockwise bends resulting in

a counterclockwise directional twist of the floss string **62j** relative to the major tool axis **44j**. A back female positioning slot **52j** remains unoccupied and open for reorienting or adding additional positioners. For example, FIG. 6F, depicts a flossing tool **40k** of the invention having a first string positioner **54k** locked into position by the back female positioning slot **52k** of the headstock **48k**. The first positioning arm **58k** and second positioning arm **60k** of the first string positioner **54k** also have counterclockwise bends resulting in a counterclockwise directional twist of the floss string **62k** relative to the major tool axis **44k**. In both FIGS. 6E and 6F, the headstocks **48j** and **48k** allow for tool adjustment by allowing removal or replacement of the first string positioner **54j** or **54k** to reposition a floss string **62j** or **62k** relative the major tool axis **44j** or **44k**.

[0071] Although the invention has been shown and described with tool adjustment occurring via the removal and replacement of string positioners, it will be appreciated that adjustment can also occur without removal of tool components. For example, FIGS. 7A and 7B are top perspective views of a flossing tool **40g** of the invention having both a first string positioner **54g** and a second string positioner **56g** positioned at the first distal end **46a** of the tool body or handle **42g**. Both the first string positioner **54g** and second string positioner **56g** are positioned to rotate on a lockable pivot **70** connecting the first and second string positioners **54g** and **56g** to the headstock **48g** of the flossing tool **40g**. This pivot mounting allows either or both of the first and second string positioners **54g** and **56g** to rotate about the pivot **70** for repositioning of the strings **62g** relative to the major tool axis **44g**. The pivot **70** can therefore lock the strings **62g** approximately perpendicularly to each other, as shown in FIG. 7A, or at either closer or greater relative angles to each other, as shown in FIG. 7B. Similarly, both strings **62g** can also be positioned at various positions relative the major tool axis **44g**.

[0072] It will be further appreciated that embodiments having more than two strings and/or more than two string positioners are contemplated to be within the anticipated scope of the invention. For example, FIG. 8 depicts a flossing tool **40h** of the invention having first and second string positioners **54h** and **56h** each having first and second positioner arms **58h** and **60h** and floss strings **62h**. A third string positioner **72**, having its own first and second positioner arms **58h** and **60h**, is also positioned to occupy and be locked in one of the forward female positioning slots **50h** to suspend a third floss string **62h**. The third floss positioner **72** can be a separate component, independently locked in the headstock **48h** by its occupied female positioning slot **50h**, or it can be joined, attached, or molded into the same structural body as the first string positioner **54h** for added rigidity or simplification in design or manufacturing. An additional unoccupied forward female positioning slot **74** and an additional unoccupied back female positioning slot **76** are included in the headstock **48h** for reorienting or adding additional string positioners.

[0073] It is further contemplated that some embodiments will allow for the removal or replacement of floss strings without full removal or replacement of the string positioners. For example, FIG. 9

depicts a floss tool **40i** of the invention having locking pegs **78** positioned at the ends of each first and second positioning arm **58i** and **60i** of the first and second string positioners **54i** and **56i**. A suspension cap **80** is attached at each end of each floss string **62i** and includes a locking hole **82** to engage, accommodate, and lock a corresponding peg **78i** of the first or second string positioners **54i** and **56i**, thereby locking and positioning each floss string **62i** on the string positioner **54i** or **56i** at a position with respect to the major tool axis **44i**.

[0074] It will be further appreciated that modifications, variations, and functional improvements to the floss strings are anticipated within the contemplated invention scope. For example, braiding, knotting, and variations to string sizes and materials are contemplated. FIGS. 10A depicts a flossing tool **40m** in which the string **62m** extending between the first and second positioner arms **58m** and **60m** of the first string positioner **54m** has two string knots **84m** for enhancing flossing action during use. The string **62m** extending between the first and second positioner arms **58m** and **60m** of the second string positioner **56m** lacks string knots, allowing for a variation in the relative flossing effects between the two floss strings **62m**. In comparison, FIG. 10B depicts a similar flossing tool **40n** in which both the floss strings **62n** of the first and second string positioners **54n** and **56n** include two string knots **84n**. Inclusion of the string knots **84n** on both floss strings **62n** allows for relative flossing effects between the two floss strings **62n** to be more balanced during use.

[0075] It will be appreciated that great variations between the numbers of string positioners/strings, arrangements, knot additions, and strings types are within the contemplated scope of the invention. For example, flossing devices of the invention may include single (FIG. 11A), double-90 degree (FIG. 11B), double non-90 degree (FIG. 11C), triple (FIG. 11D), quadruple (FIG. 11E), or a greater number string positioner/string combinations. Single mid-point knots may also be a feature of single (FIG. 11F), double-90 degree (FIG. 11G), double non-90 degree (FIG. 11H), triple (FIG. 11-I), quadruple (FIG. 11J), or greater numbered string positioner/string combinations, with midpoint knots joining separate string where two or more strings are present (FIGS. 11G, 11H, 11-I, and 11J). Braided string materials can also be used in single (FIG. 11K), double-90 degree (FIG. 11L), double non-90 degree (FIG. 11M), triple (FIG. 11N), quadruple (FIG. 11-O), or greater numbered string positioner/string combinations, with the separate strings remaining independent and unattached to different strings where two or more strings are present (FIGS. 11L, 11M, 11N, and 11-O). Multiple string knots may also be added to a single string for single (FIG. 11P), double-90 degree (FIG. 11Q), double non-90 degree (FIG. 11R), triple (FIG. 11S), quadruple (not shown), or a greater numbered string positioner/string combination, including string knots positioned both at the midpoint and at additional locations along a string (FIG. 11T).

[0076] It is also possible within the contemplated invention scope to change the positioning of the strings relative the major tool dimension without removing the string positioners. For example FIG.

12A depicts side view of a flossing tool **40p** in which the entire first distal end of the tool **40p** is attached to the rest of the tool body or handle **40p** with an inclination lock pivot **86**. The inclination lock pivot **86** allows for the incline rotation of the entire headstock **48p** and can be locked at any various selected inclined position relative to the major tool axis **44p**. The headstock **48p** therefore allows for tool adjustment by being selectively rotated about and locked by the lock pivot **86** to position the first and second string positioners **54p** and **56p** at different selected inclined positions, positioning the floss strings **62p** relative the major tool axis **44p**.

[0077] Other types of floss string positioning relative to the major tool axis are also within the contemplated scope of the invention. For example, FIG. 12B depicts top view of a flossing tool **40q** in which the entire first distal end of the tool **40q** is attached to the rest of the tool body or handle **40q** with a lateral inclination lock pivot **88**. The lateral lock pivot **88** allows for the lateral rotation of the entire headstock **48q** and can be locked at any various selected lateral positions relative to the major tool axis **44q**. The headstock **48q** therefore allows for tool adjustment by being selectively laterally rotated about and locked by the lock pivot **86** to laterally position the first and second string positioners **54q** and **56q** at different selected lateral positions, positioning the floss strings **62q** relative the major tool axis **44q**.

[0078] Variations in the number of strings positioned in parallel or on the same string positioner, and variations in the profile and/or orientations of the string positioners themselves are also within the contemplated scope of the invention. For example, FIG. 13 depicts a side view of a flossing tool **40r** of the invention having a single higher profile first string positioner **54r** in which two parallel floss strings **62r** extend between the first and second positioner arms **58r** and **60r** to enhance flossing effectiveness. The first and second positioner arms **58r** and **60r** are themselves longer to allow the first string positioner **54r** to effect flossing with a greater clearance from the headstock **48r** and tool body or handle **42r**. A side view of a similar flossing tool **40s** is depicted in FIG. 14. However, the depicted flossing tool **40s** includes a single lower profile first string positioner **54s** in which the two parallel floss strings **62s** extend between shorter first and second positioner arms **58s** and **60s** to allow the first string positioner **54s** to effect flossing with a less clearance from the headstock **48s** and tool body or handle **42s**.

[0079] Variations in profiles and numbers of parallel or same-string positioner strings are also within the contemplated invention scope. For example FIG. 15 depicts a side view of a flossing tool **40t** in which two parallel floss strings **62t** extend between the first and second positioner arms **58t** and **60t** of both first and second higher profile string positioners **54t** and **56t**. The first and second positioner arms **58t** and **60t** of both first and second string positioners **54t** and **56t** are longer to allow greater flossing clearance from the headstock **48t** and tool body or handle **42t** but with the added

effectiveness of an additional flossing angle. In some embodiments, intersecting strings **62t** of the first and second string positioners **54t** and **56t** may be attached or interconnected.

[0080] Although shown and described as including string positioners or parallel string groups of up to two strings, it will be appreciated that string positioners or more parallel string groups having three or more strings are also intended to be within the contemplated scope of the invention.

[0081] It will be similarly appreciated that two or more headstocks and/or pairings or greater combinations of string positioners are possible. For example, FIGS. 17 and 18 depict a side view of a flossing tool **40v** of the invention having multiple headstocks **48v**, each having its own pair of first and second string positioners **54v** and **56v**, positioned along the first distal end **46v** of the tool body or handle **42v**. Among the advantages of such an arrangement is the ability to floss between a user's gums **79** and several teeth **80** simultaneously from either the front, as depicted in FIG. 17, or from either side, as depicted in FIG. 18.

[0082] In some embodiments, adjustment of one or more floss strings relative to the major tool axis during tool use may be advantageous, and such embodiments are within the contemplated scope of the invention. For example, FIG. 19 depicts a top perspective view of a flossing tool **40w** of the invention in which the tool body **42w** is divided into a first handle **92** and second handle **94**, the handles **92** and **94** connected at the first distal end **46w** with a pivot link **96**. The pivot link **96** forms a headstock **48w** to which first and second string positioners **54w** and **56w** are attached. A major tool axis **44w** may be defined by the major lengthwise dimension of either the first handle **92** or second handle **94**.

[0083] Comparing the top perspective views of the flossing tool **40w** in FIGS. 19 and 20 with the top views of the flossing tool **40w** in FIGS. 21 and 22, the first and second positioning arms **58w** and **60w** are positioned to orient the strings **62w** at approximately 90 degrees, or about perpendicularly from each other, when the handles **92** and **94** are in the closed position, as shown in FIGS. 19 and 21. When the user rotates the handles **92** and **94** away from each other about the pivot link **96**, the first and second string positioners **54w** and **56w** also rotate to a different relative angle, as shown in FIGS. 20 and 22. In this way, the user can adjust the positions of each string **62w** relative to one major tool axis **44w**.

[0084] Additional accessory components can also be included as add-on flossing tool features within the anticipated invention scope. For example, FIG. 23 depicts a flossing tool **40x** of the invention fitted with a gum brush **98x** at the first distal end **46x** of the tool body or handle **42x**. The gum brush **98x** is attached to and extends from the headstock **48x** of the flossing tool **40x** generally along the major tool axis **44x**. This positioning enables the user to fully utilize the handle **42x** in manipulating the brush **98x** during gum cleaning. The brush **98x** is optimally screwed into its position on the headstock **48x** to enable removal during flossing operations. An elongated snap cap **100y**,

which, as shown, may be constructed of transparent molded plastic, is fitted over the gum brush **98x** for hygienic protection during tool storage.

[0085] Referring now to FIG. 24, a similar flossing tool **40y** of the invention is fitted with a gum brush **98x** at the second distal end **99** of the tool body or handle **42y**. The gum brush **98y** is attached to and extends generally along the major tool axis **44y**, which also enables the user to fully utilize the handle **42y** in manipulating the brush **98y** during gum cleaning, without requiring removal during flossing operations. The elongated snap cap **100y** is shown in FIG. 24 removed from the brush for use.

[0086] Those skilled in the art will realize that this invention is capable of embodiments different from those shown and described. It will be appreciated that the detail of the structure of the disclosed apparatuses and methodologies can be changed in various ways without departing from the invention itself. Accordingly, the drawings and detailed description of the preferred embodiments are to be regarded as including such equivalents as do not depart from the spirit and scope of the invention.

CLAIMS

1. An adjustable flossing tool comprising:

a tool body having a major tool axis, said tool body having a first distal tool end and a headstock positioned at or near said first distal tool end;

at least one first string positioner positioned on said headstock, said first string positioner having a first positioner arm and a second positioner arm;

at least one first floss string positioned to extend from said first positioner arm to said second positioner arm of at least one said first string positioner;

said headstock allowing at least one said first string positioner to position said first string in a first string position in parallel to or at an angle to said major tool axis, said headstock allowing for tool adjustment to allow at least one said first string positioner to position said first floss string in a second string position in parallel to or at an angle to said major tool axis; and

said first string position being different from said second string position relative to said major tool axis.

2. The flossing tool of claim 1 further comprising a rotatable locking pivot, said locking pivot attaching said at least one first string positioner to said headstock, said locking pivot allowing said at least one first string positioner to rotate and position said at least one first floss string in said first string position, said locking pivot allowing for tool adjustment by allowing said at least one first string positioner to rotate and position said at least one first floss string in said second string position.

3. The flossing tool of claim 1 further comprising said at least one string positioner being removable and replaceable to a locked angle relative to said major tool axis by said headstock.

4. The flossing tool of claim 1 further comprising at least one second floss string, said at least one second floss string being positioned parallel to at least one first floss string.

5. The flossing tool of claim 1 further comprising a knot in said at least one first floss string.

6. The flossing tool of claim 1 further comprising at least one second floss string, said at least one first floss string and said at least one second floss string being braided.

7. The flossing tool of claim 1 further comprising said at least one floss string being connected to said first positioner arm and said second positioner arm with removable string positioner tips.

8. The flossing tool of claim 1 further comprising a pivot joint in said tool body, said headstock being rotatable relative to said major tool axis, said pivot joint allowing said headstock and said at least one first string positioner to rotate said at least one floss string from said first string position to said second string position.

9. The flossing tool of claim 1 further comprising a second distal tool end and a gum brush positioned on said second distal tool end.

10. The flossing tool of claim 1 further comprising three or more said string positioners and three or more floss strings.

11. The flossing tool of claim 1 further comprising one or more second string positioners to allow said flossing tool to simultaneously floss multiple teeth.

12. The flossing tool of claim 1 wherein said at least one floss string is attached to said first positioner arm and said second positioner arm with interchangeable string positioner tips.

13. An adjustable flossing tool comprising:

a tool body having a major tool axis, said tool body having a first distal tool end and a headstock positioned at or near said first distal tool end;

a first string positioner and a second string positioner positioned on said flossing tool, each said first string positioner and said second string positioner having a first positioner arm and a second positioner arm, at least one of said first string positioner and said second string positioner being positioned on said headstock;

each of said first string positioner and said second string positioner having at least one first floss string positioned to extend from said first positioner arm to said second positioner arm;

said headstock allowing at least one of said first string positioner and said second string positioner to position a said first string at a first string position in parallel to or at an angle to said major tool axis, said headstock allowing for tool adjustment to allow at least one said first string

positioner and said at least one second string positioner to position a said first floss string at a second string position in parallel to or at an angle to said major tool axis; and

said first string position being different from said second string position relative to said major tool axis.

14. The flossing tool of claim 13 further comprising a rotatable locking pivot, said locking pivot attaching at least one of said first string positioner and said second string positioner to said headstock, said locking pivot allowing at least one of said first string positioner and said second string positioner to rotate and position at least one said first floss string in said first string position, said locking pivot allowing for tool adjustment by allowing at least one of said first string positioner and said second string positioner to rotate and position at least one said first floss string in said second string position.

15. The flossing tool of claim 13 further comprising at least one of said first string positioner and said second string positioner being removable and replaceable to a locked angle relative to said major tool axis by said headstock.

16. The flossing tool of claim 13 further comprising said first string positioner and said second string positioner each having at least one second floss string, each said at least one second floss string being positioned parallel to each said first floss string.

17. The flossing tool of claim 13 further comprising at least one of said first string positioner and said second string positioner allowing said floss string to be positioned approximately perpendicularly.

18. The flossing tool of claim 13 further comprising a second floss string on at least one of said first string positioner and said second string positioner, said second floss string being positioned parallel to at least one first floss string.

19. The flossing tool of claim 13 further comprising a knot in at least one of said first floss string and said second floss string.

20. The flossing tool of claim 13 wherein at least one said floss string is braided.

21. The flossing tool of claim 13 further comprising a pivot joint in said tool body, said headstock being rotatable relative to said major tool axis, said pivot joint allowing said headstock and at least one

of said first string positioner and said second string positioner to rotate at least one said floss string from said first string position to said second string position.

22. The flossing tool of claim 13 further comprising a second distal tool end and a gum brush positioned on said second distal tool end.

23. The flossing tool of claim 13 further comprising three or more said string positioners and three or more floss strings.

24. The flossing tool of claim 13 wherein said first string positioner and said second string positioner are positioned to allow said flossing tool to simultaneously floss multiple teeth.

25. The flossing tool of claim 13 wherein at least one said floss string is attached to at least one first positioner arm and at least one second positioner arm with interchangeable string positioner tips.

26. An adjustable flossing tool comprising:

a tool body having a major tool axis, said tool body having a first distal tool end and a headstock positioned at or near said first distal tool end;

at least one first string positioner and at least one second string positioner positioned on said flossing tool, each said at least one first string positioner and said at least one second string positioner having a first positioner arm and a second positioner arm, at least one of said first string positioner and said second string positioner being positioned on said headstock, at least one of said first string positioner and said second string positioner being removable from said flossing tool and replaceable with another said at least one said first string positioner or said at least one second string positioner;

each of said at least one first string positioner and at least one said second string positioner having at least one first floss string positioned to extend from said first positioner arm to said second positioner arm;

said headstock allowing at least one of said first string positioner and said second string positioner to position a said first string at a first string position in parallel to or at an angle to said major tool axis, said flossing tool allowing for tool adjustment by allowing removal and replacement of said at least one first string positioner or said at least one second string positioner to allow at least

one of said first string positioner and said second string positioner to position at least one said first floss string at a second string position in parallel to or at an angle to said major tool axis; and

said first string position being different from said second string position relative to said major tool axis.

27. The flossing tool of claim 26 further comprising at least one of said first string positioner and said second string positioner allowing said floss string to be positioned approximately perpendicularly.

28. The flossing tool of claim 26 further comprising a second floss string on at least one of said first string positioner and said second string positioner, said second floss string being positioned parallel to at least one first floss string.

29. The flossing tool of claim 26 further comprising a knot in at least one of said first floss string and said second floss string.

30. The flossing tool of claim 26 wherein at least one said floss string is braided.

31. The flossing tool of claim 26 further comprising a pivot joint in said tool body, said headstock being rotatable relative to said major tool axis, said pivot joint allowing said headstock and at least one of said first string positioner and said second string positioner to rotate at least one said floss string from said first string position to said second string position.

32. The flossing tool of claim 26 further comprising a second distal tool end and a gum brush positioned on said second distal tool end.

33. The flossing tool of claim 26 further comprising three or more said string positioners and three or more floss strings.

34. The flossing tool of claim 26 wherein said first string positioner and said second string positioner are positioned to allow said flossing tool to simultaneously floss multiple teeth.

35. The flossing tool of claim 26 wherein at least one said floss string is attached to at least one first positioner arm and at least one second positioner arm with interchangeable string positioner tips.

36. An adjustable flossing tool comprising:

a tool body having a major tool axis, said tool body having a first distal tool end and a headstock positioned at or near said first distal tool end;

at least one first string positioner positioned on said headstock, said at least one first string positioner having a first positioner arm and a second positioner arm;

at least one first floss string positioned to extend from said first positioner arm to said second positioner arm of at least one said first string positioner;

said at least one first string positioner being attached to said headstock with a rotatable locking pivot, said locking pivot allowing at least one said first string positioner to rotate and position said at least one floss string in a first string position in parallel to or at an angle to said major tool axis, said locking pivot allowing for tool adjustment by allowing rotation of said at least one first string positioner to position said at least one first floss string in a second string position in parallel to or at an angle to said major tool axis; and

said first string position being different from said second string position relative to said major tool axis.

37. The flossing tool of claim 36 further comprising at least one of said first string positioner and said second string positioner allowing said floss string to be positioned approximately perpendicularly.

38. The flossing tool of claim 36 further comprising a second floss string on at least one of said first string positioner and said second string positioner, said second floss string being positioned parallel to at least one first floss string.

39. The flossing tool of claim 36 further comprising a knot in at least one of said first floss string and said second floss string.

40. The flossing tool of claim 36 wherein at least one said floss string is braided.

41. The flossing tool of claim 36 further comprising a pivot joint in said tool body, said headstock being rotatable relative to said major tool axis, said pivot joint allowing said headstock and at least one of said first string positioner and said second string positioner to rotate at least one said floss string from said first string position to said second string position.

42. The flossing tool of claim 36 further comprising a second distal tool end and a gum brush positioned on said second distal tool end.

43. The flossing tool of claim 36 further comprising three or more said string positioners and three or more floss strings.

44. The flossing tool of claim 36 wherein said first string positioner and said second string positioner are positioned to allow said flossing tool to simultaneously floss multiple teeth.

45. The flossing tool of claim 36 wherein at least one said floss string is attached to at least one first positioner arm and at least one second positioner arm with interchangeable string positioner tips.

46. An adjustable flossing tool comprising:

a tool body having first distal end, a headstock positioned at said first distal end, a first plier handle having a first major handle axis, and a second plier handle having a second major handle axis;

said second plier handle being rotatably attached to said first plier handle at a pivot point in said headstock;

a first string positioner attached in fixed position relative to said first plier handle and a second string positioner attached fixed position relative to said second plier handle, each said first string positioner and said second string positioner having a first positioner arm and a second positioner arm,

each of said first string positioner and said second string positioner having at least one first floss string positioned to extend from said first positioner arm to said second positioner arm;

said pivot point allowing said first string positioner to rotate at least one first floss string along with rotation of said first plier handle to a first string position relative to said second plier handle and said second major handle axis;

said pivot point allowing said second string positioner to rotate at least one first floss string along with rotation of said second plier handle to a second string position relative to said first plier handle and said first major handle axis; and

said first string position being different from said second string position relative to said second major handle axis.

47. The flossing tool of claim 46 further comprising said first string positioner and said second string positioner each having at least one second floss string, each said at least one second floss string being positioned parallel to each said first floss string.

48. The flossing tool of claim 46 further comprising at least one of said first string positioner and said second string positioner allowing said floss string to be positioned approximately perpendicularly.

49. The flossing tool of claim 46 further comprising a second floss string on at least one of said first string positioner and said second string positioner, said second floss string being positioned parallel to at least one first floss string.

50. The flossing tool of claim 46 further comprising a knot in at least one of said first floss string and said second floss string.

51. The flossing tool of claim 46 wherein at least one said floss string is braided.

52. The flossing tool of claim 46 further comprising a second distal tool end and a gum brush positioned on said second distal tool end.

53. The flossing tool of claim 46 wherein at least one said floss string is attached to at least one first positioner arm and at least one second positioner arm with interchangeable string positioner tips.

54. An adjustable flossing tool comprising:

a tool body having a major tool axis, said tool body having a first distal tool end and a headstock positioned at or near said first distal tool end;

a first string positioner and a second string positioner positioned on said flossing tool, each said first string positioner and said second string positioner having a first positioner arm and a second positioner arm, at least one of said first string positioner and said second string positioner being positioned on said headstock;

each of said first string positioner and said second string positioner having at least one first floss string positioned to extend from said first positioner arm to said second positioner arm;

a rotatable locking pivot, said locking pivot attaching at least one of said first string positioner and said second string positioner to said headstock, said locking pivot allowing at least one of said first string positioner and said second string positioner to rotate and position at least one said first floss string in a first string position relative to said major tool axis, said locking pivot allowing for tool adjustment by allowing at least one of said first string positioner and said second string positioner to

rotate and position at least one said first floss string in a second string position relative to said major tool axis;

said first string position being different from said second string position relative to said major tool axis; and

said tool allowing said floss string of said first string positioner and said second string positioner to be positioned approximately perpendicularly.

55. A method for flossing comprising:

providing an adjustable flossing tool having a tool body with a major tool axis, the tool body having a first distal tool end and a headstock positioned at or near the first distal tool end;

providing at least one first string positioner positioned on the headstock, the first string positioner having a first positioner arm and a second positioner arm;

positioning at least one first floss string to extend from the first positioner arm to the second positioner arm;

positioning the first string positioner on the headstock to position the first floss string in a first string position in parallel to or at an angle to the major tool axis; and

adjusting the position of the string positioner on the headstock to move the first floss string from a first string position to a second string position in parallel to or at an angle to the major tool axis, wherein the first string position is different from the second string position relative to the major tool axis.

56. A method for flossing comprising:

providing an adjustable flossing tool having a tool body having a major tool axis, the tool body having a first distal tool end and a headstock positioned at or near the first distal tool end;

providing a first string positioner and a second string positioner and positioning the first string positioner and second string positioner on the flossing tool, each of the first string positioner and second string positioner having a first positioner arm and a second positioner arm;

positioning at least one of the first string positioner and second string positioner on the headstock of the flossing tool;

providing at least one first floss string for each of the first string positioner and second string positioner, and positioning each floss string to extend from the first positioner arm to the second positioner arm of one of the first string positioner and the second string positioner;

adjusting the position of at least one of the first string positioner and the second string positioner on the headstock to allow at least one of the first string positioner and the second string positioner to position a floss string at a first string position in parallel to or at an angle to said major tool axis; and

adjusting the position of at least one of the first string positioner and second string positioner on the headstock to move at least one first floss strjng from a first string position to a second string position in parallel to or at an angle to the major tool axis, wherein the first string position is different from the second string position relative to the major tool axis.

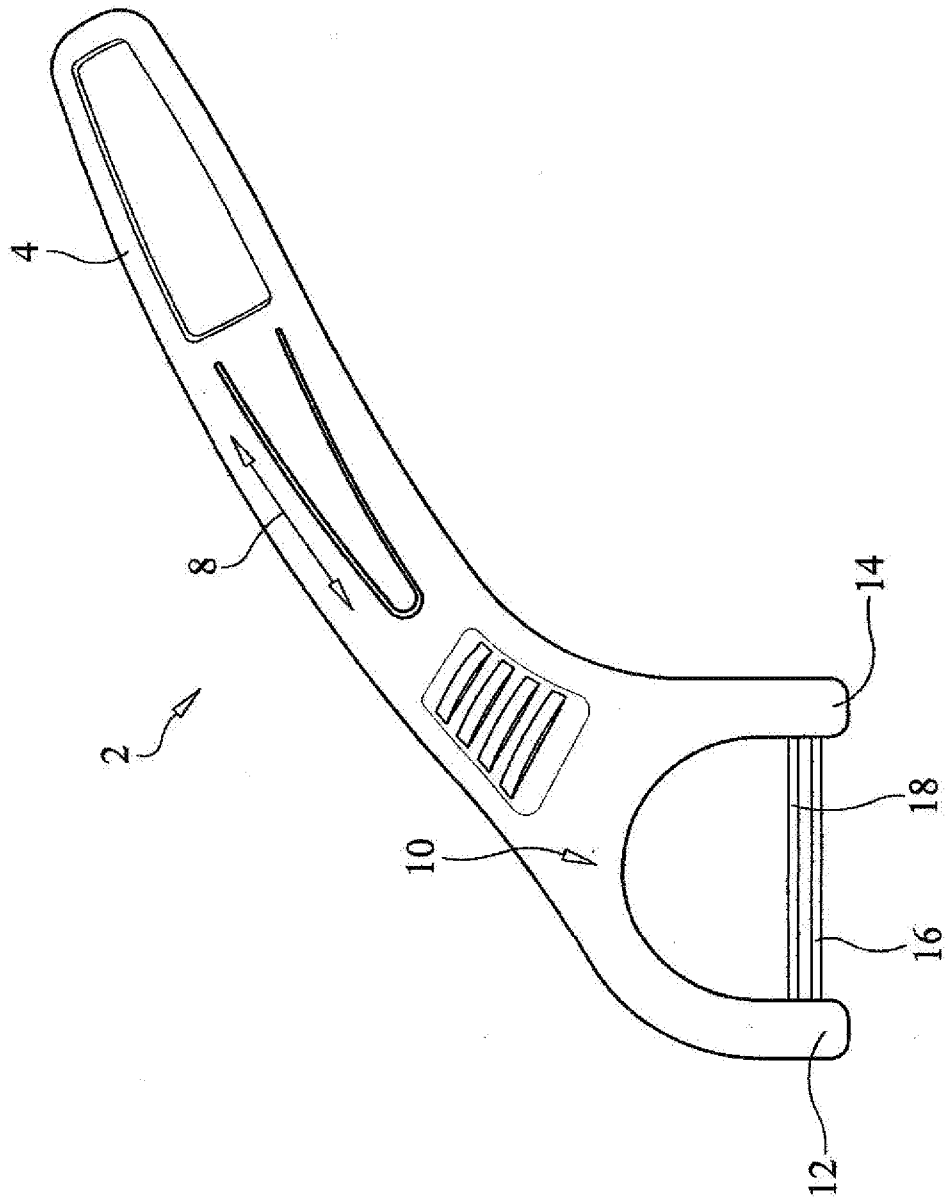

FIG. 1
PRIOR ART

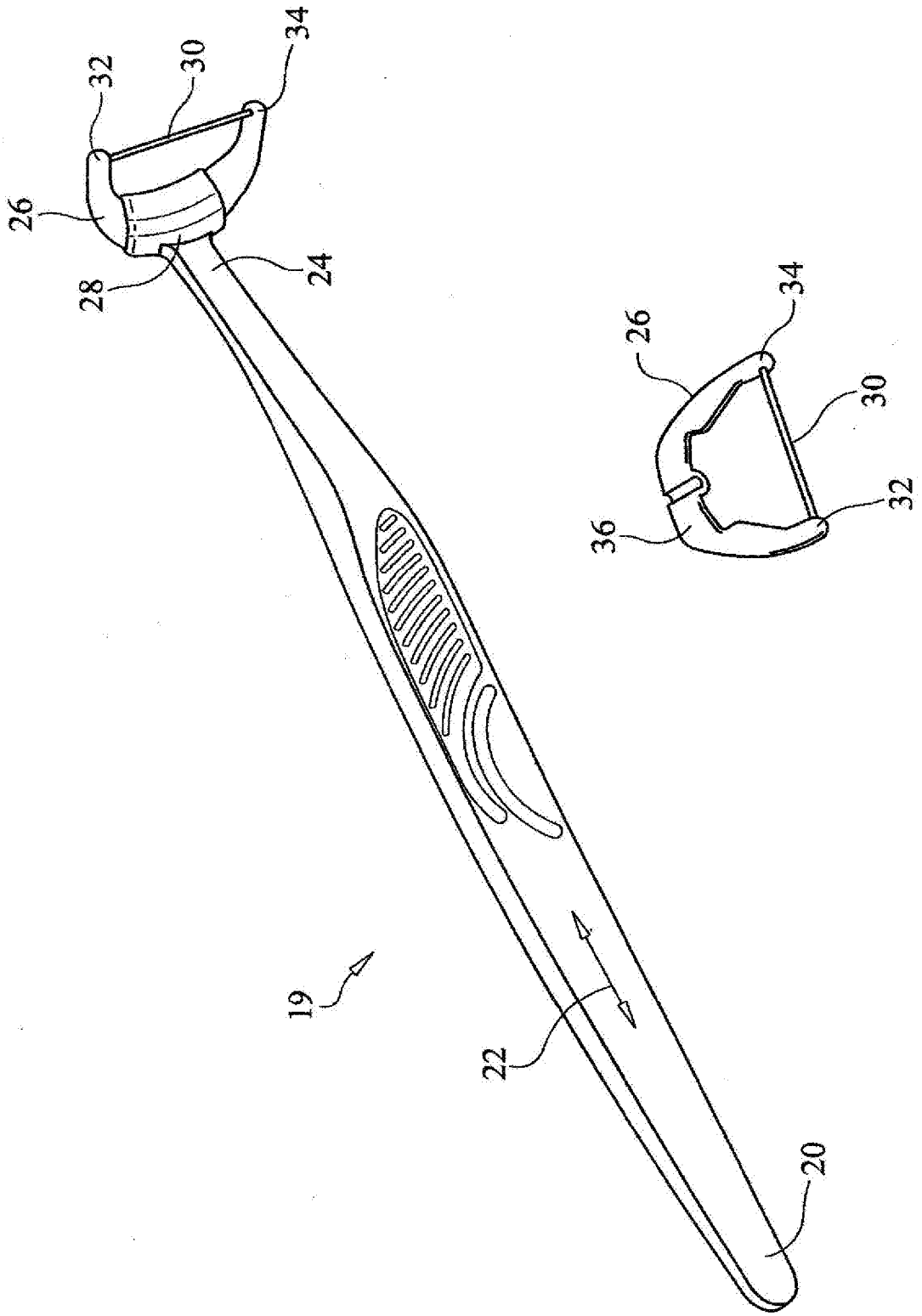

FIG. 2
PRIOR ART

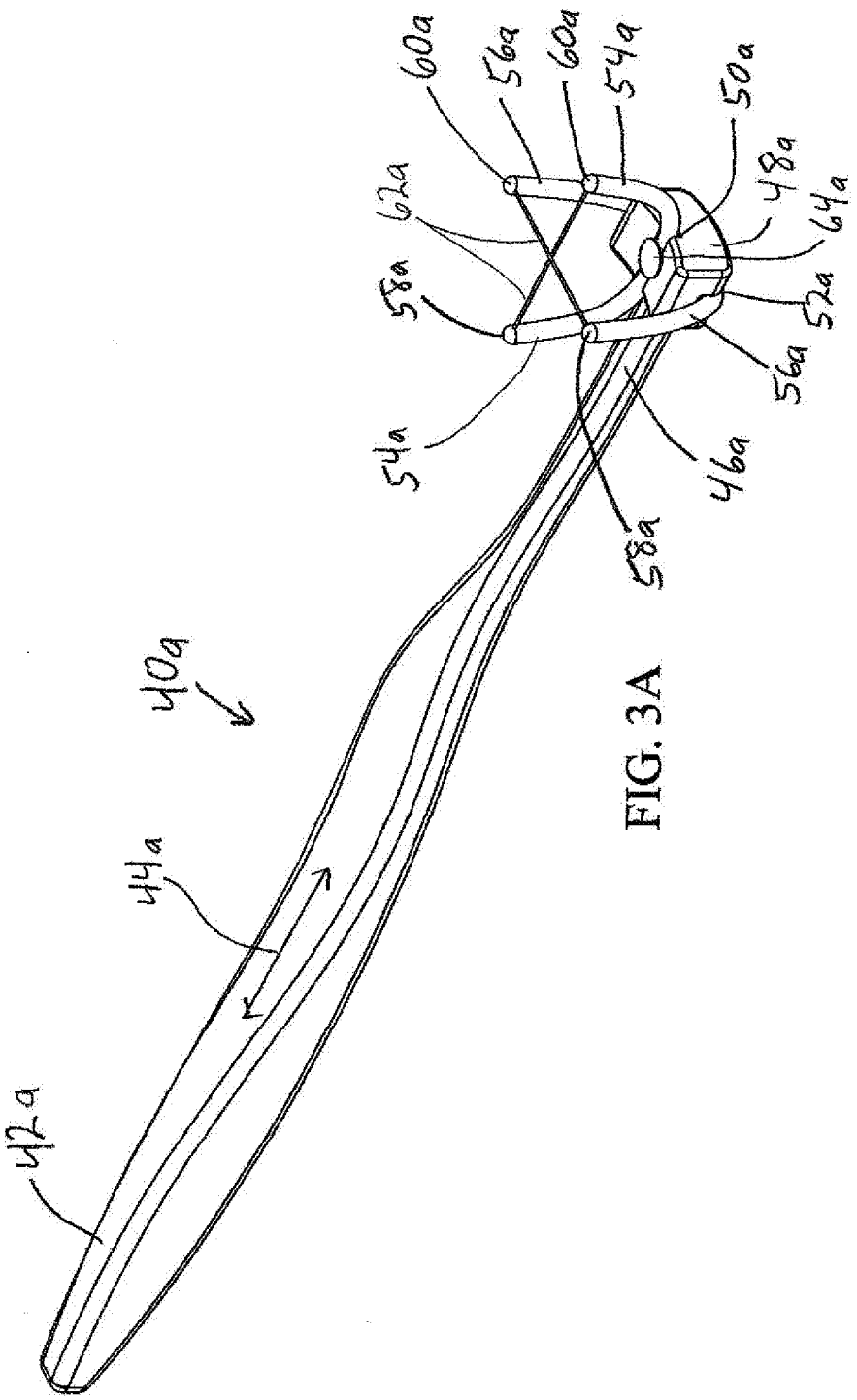
60a
56a
60a
54a
50a
62a
48a
64a
58a
52a
56a
54a
46a
58a
40a
44a
42a

FIG. 3A

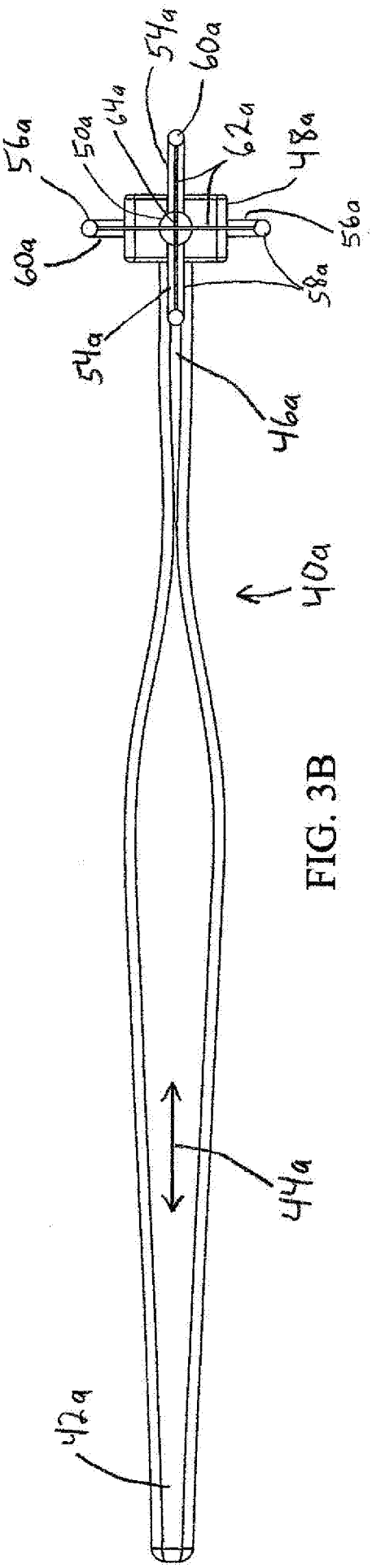
54a
60a
56a
50a
64a
62a
48a
56a
60a
58a
54a
46a
40a
44a
42a

FIG. 3B

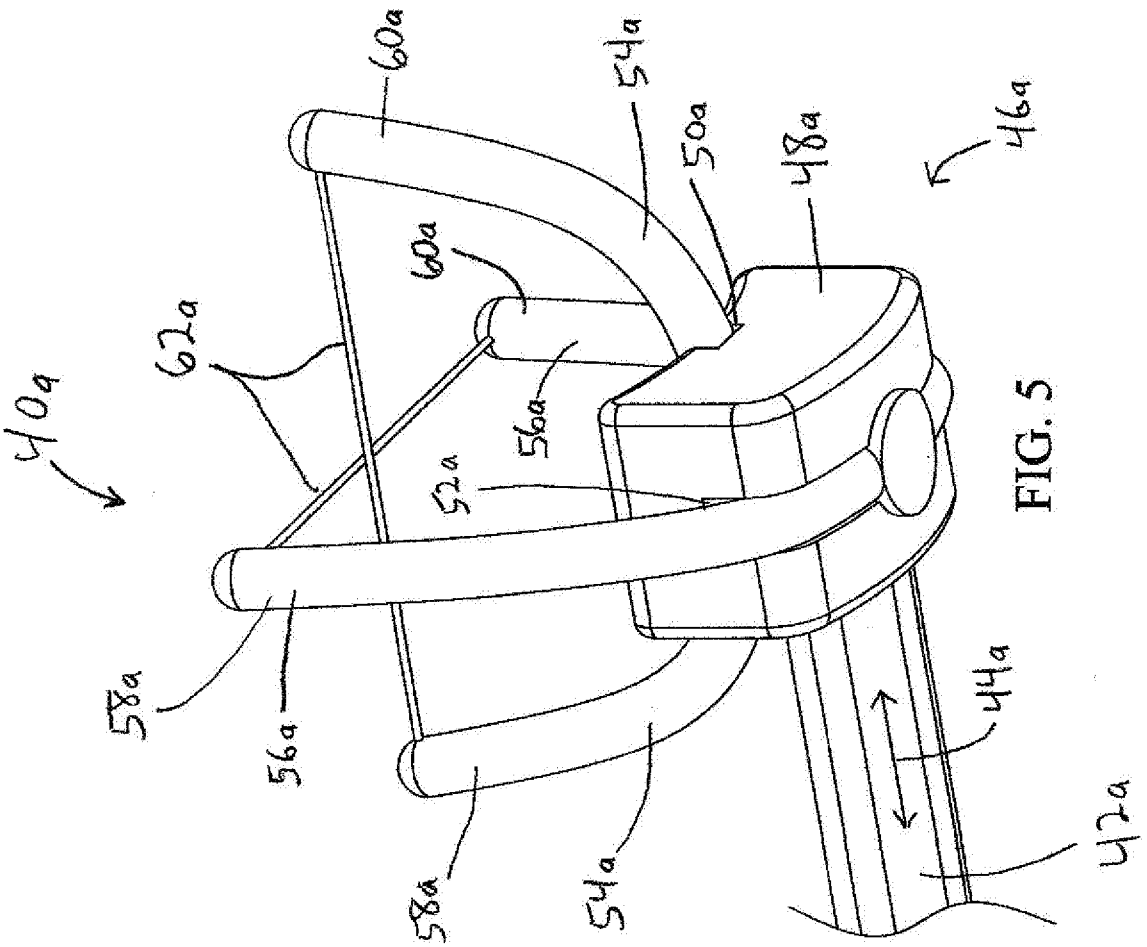
60a
54a
50a
48a
46a
62a
40a
60a
56a
52a
58a
56a
58a
54a
44a
42a

FIG. 5

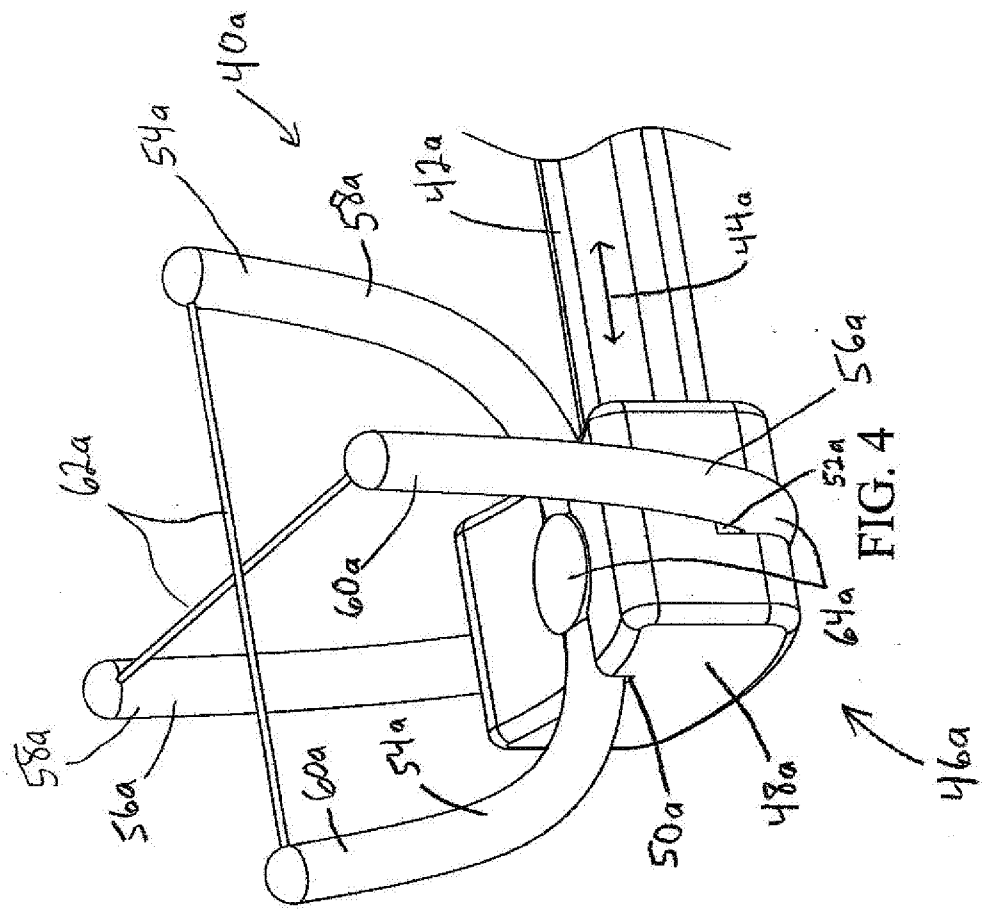
40a
54a
58a
42a
44a
62a
56a
52a
60a
64a
58a
56a
60a
54a
50a
48a
46a

FIG. 4

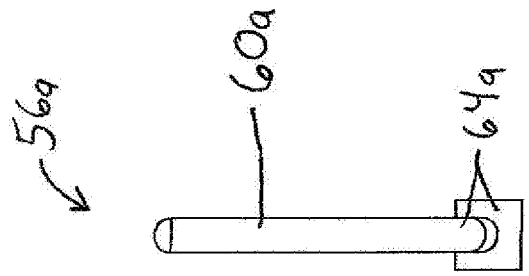

FIG. 4B

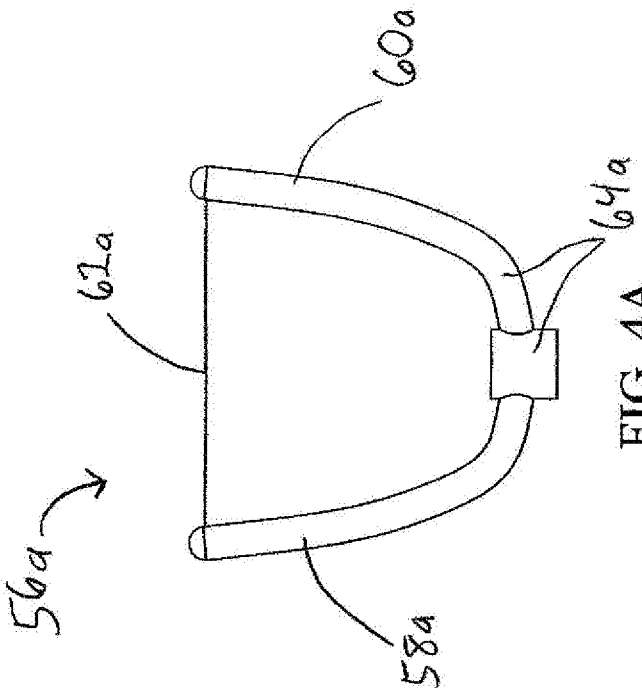

FIG. 4A

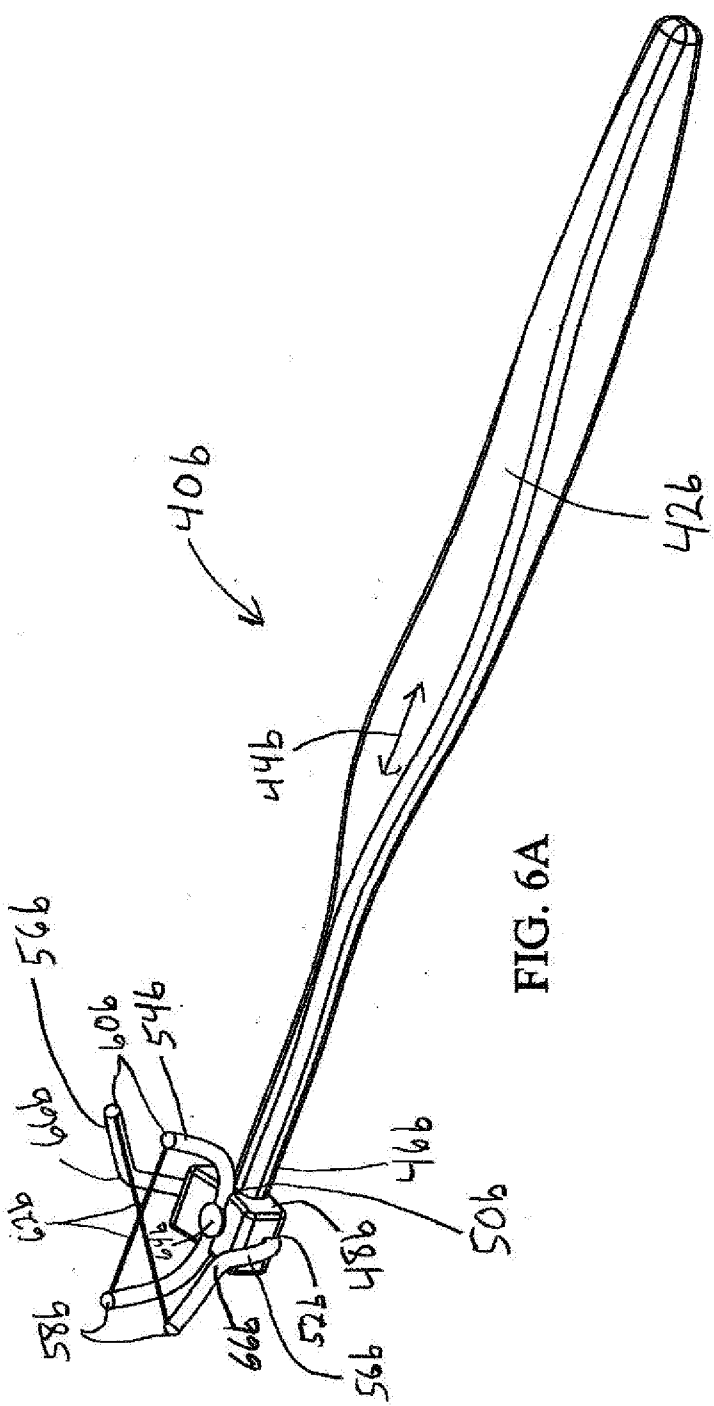
40b
42b
44b
46b
50b
48b
52b
56b
58b
60b
62b
64b
66b
54b
56b
66b

FIG. 6A

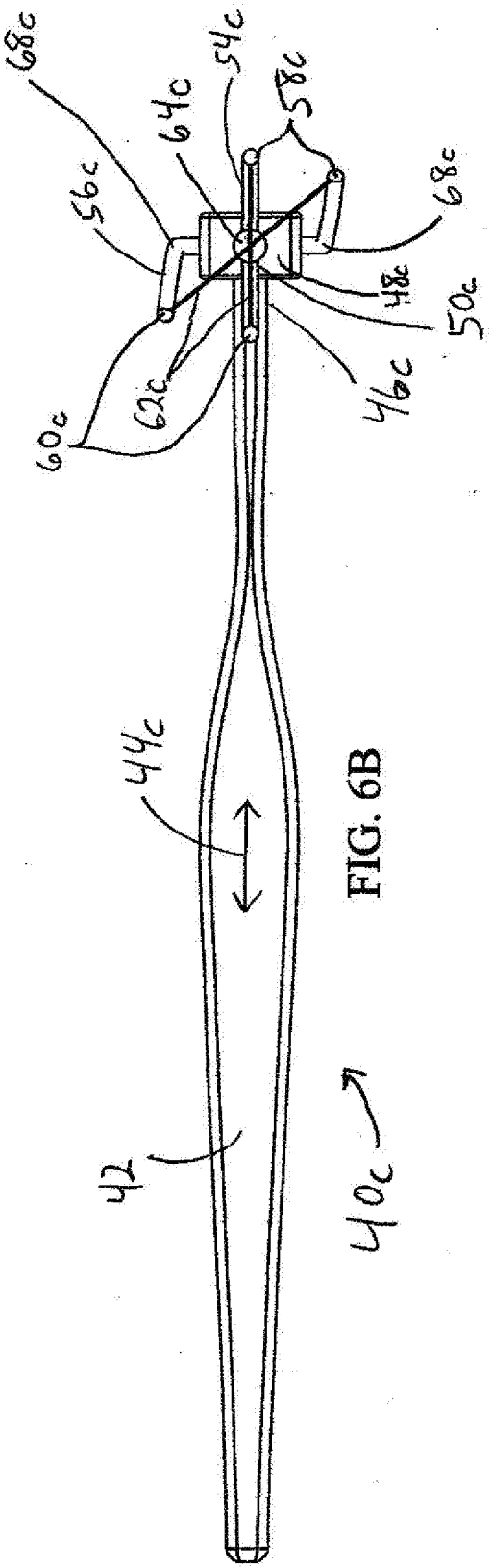
68c
56c
64c
54c
58c
68c
48c
50c
46c
62c
60c
44c
42
40c

FIG. 6B

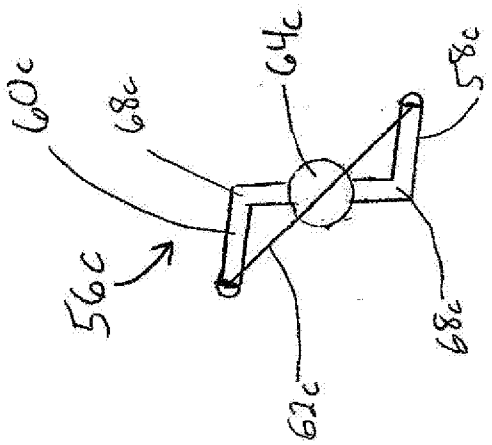

FIG. 6D

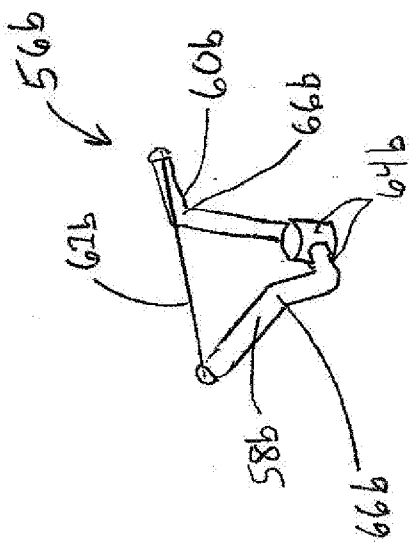

FIG. 6C

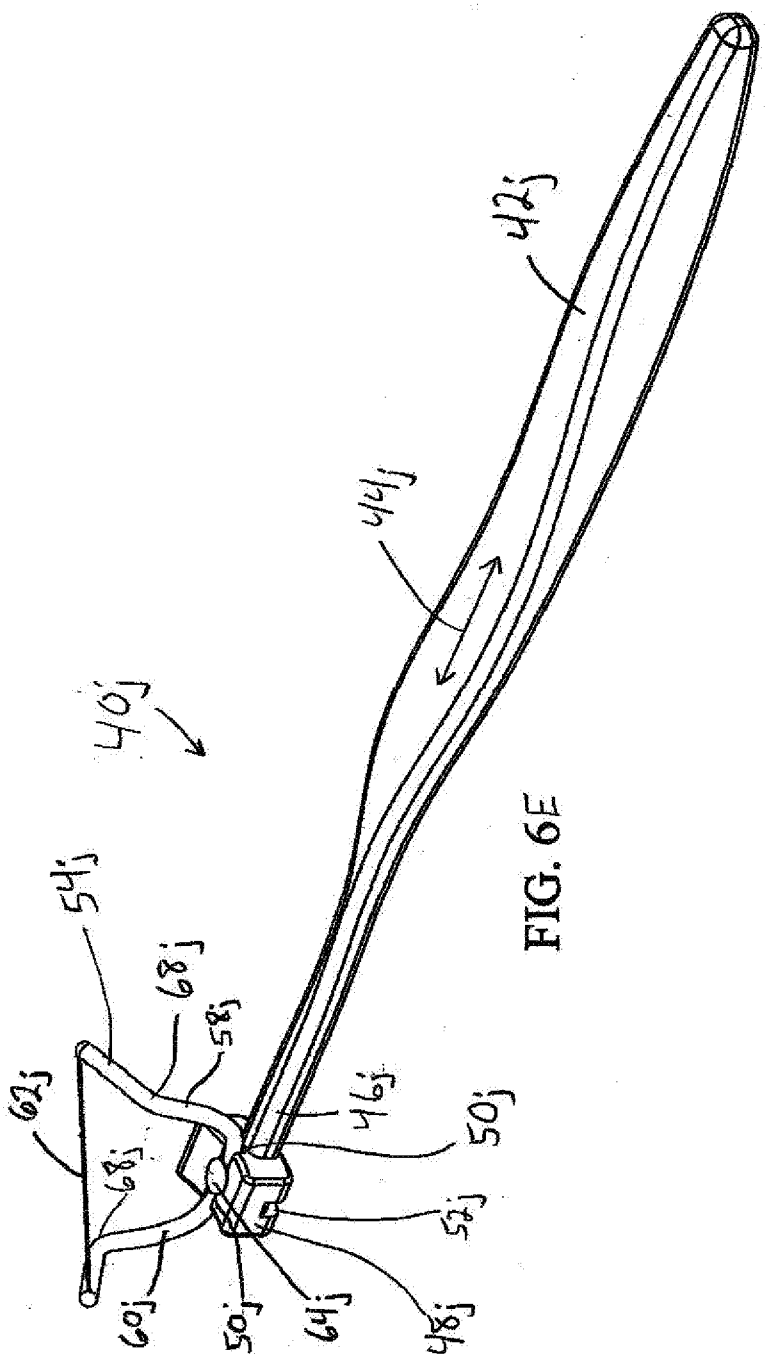
40j
42j
44j
46j
48j
50j
52j
54j
58j
60j
62j
64j
68j

FIG. 6E

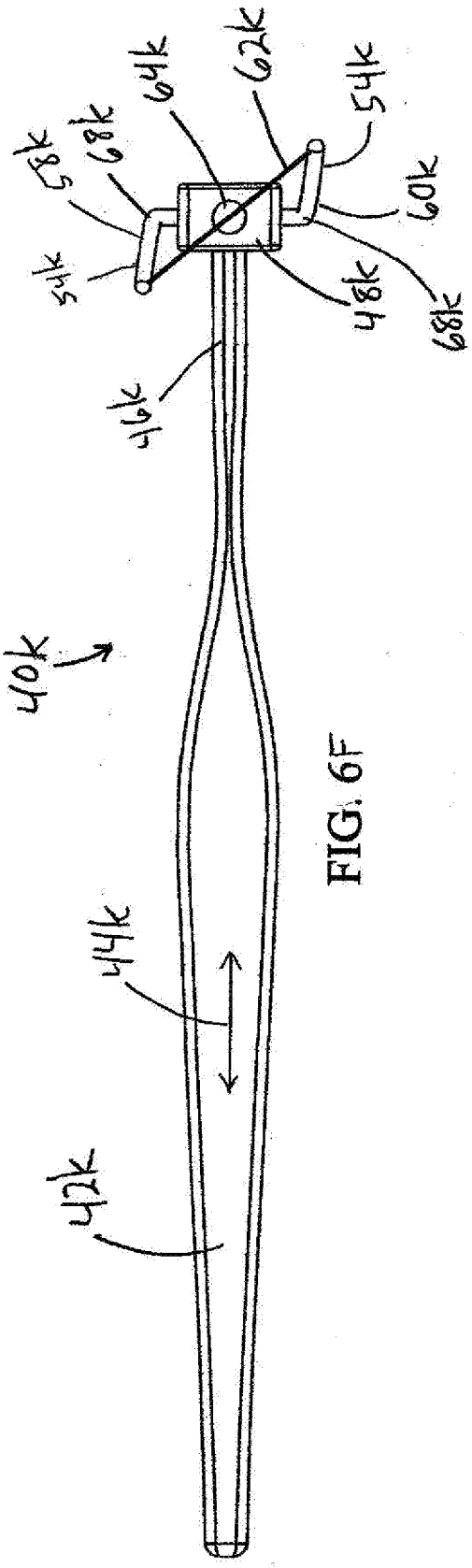
40k
42k
44k
46k
48k
50k
52k
54k
58k
60k
62k
64k
68k

FIG. 6F

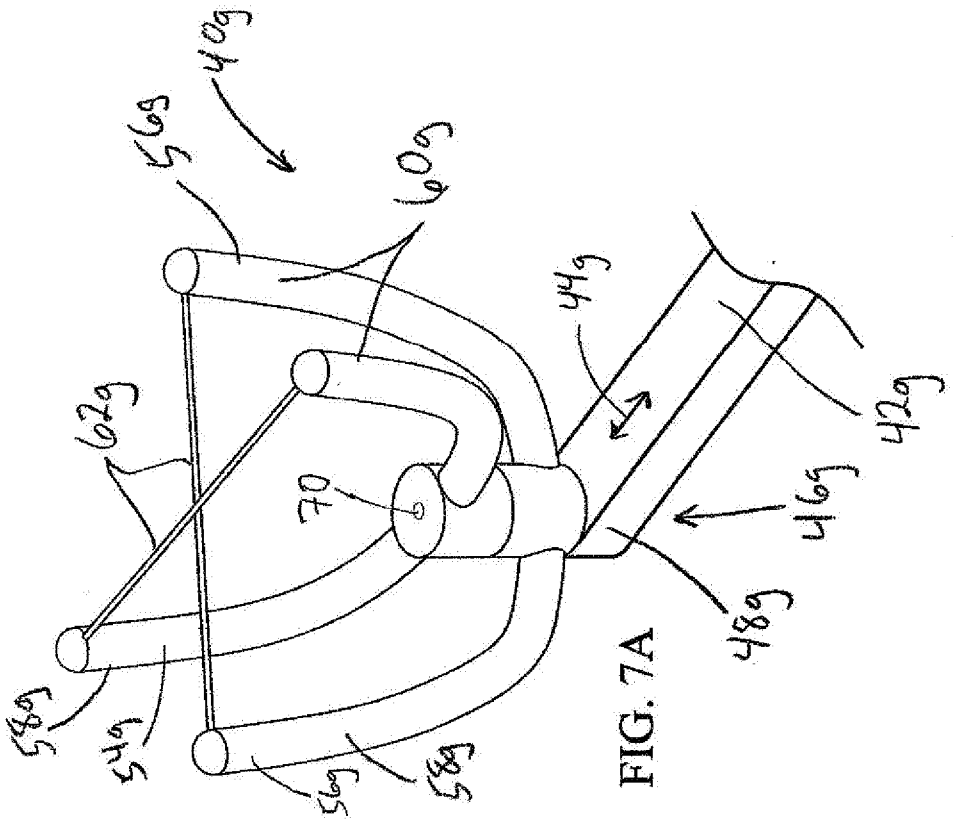
40g
56g
60g
62g
70
44g
42g
46g
48g
58g
54g
56g
58g

FIG. 7A

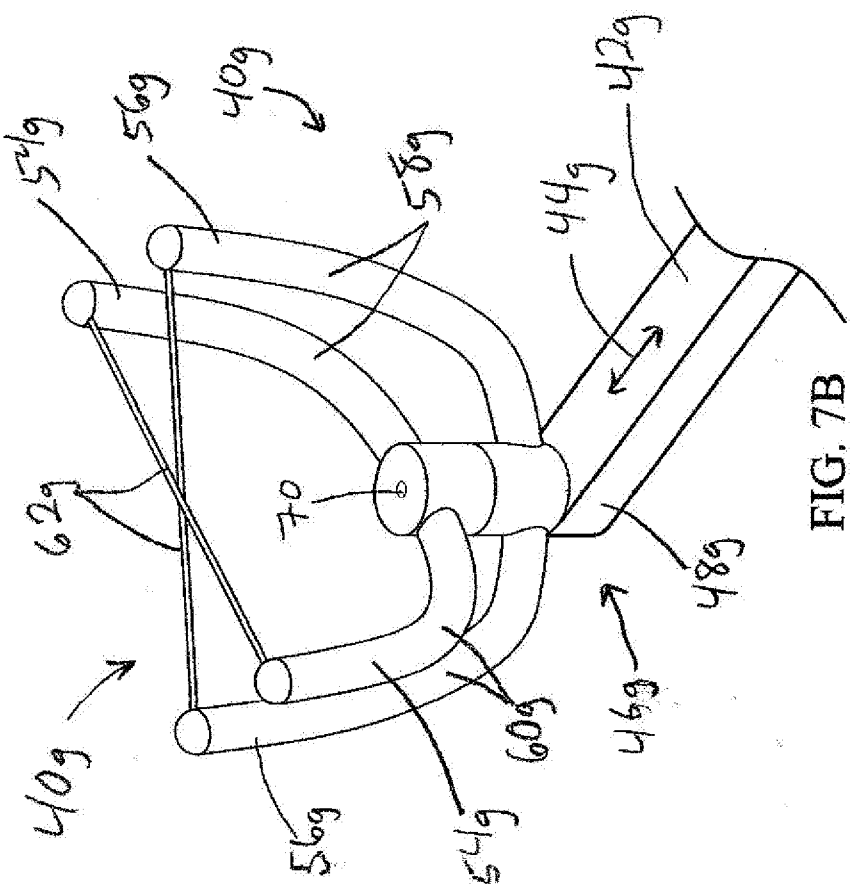
54g
56g
40g
58g
44g
42g
62g
70
40g
56g
54g
60g
46g
48g

FIG. 7B

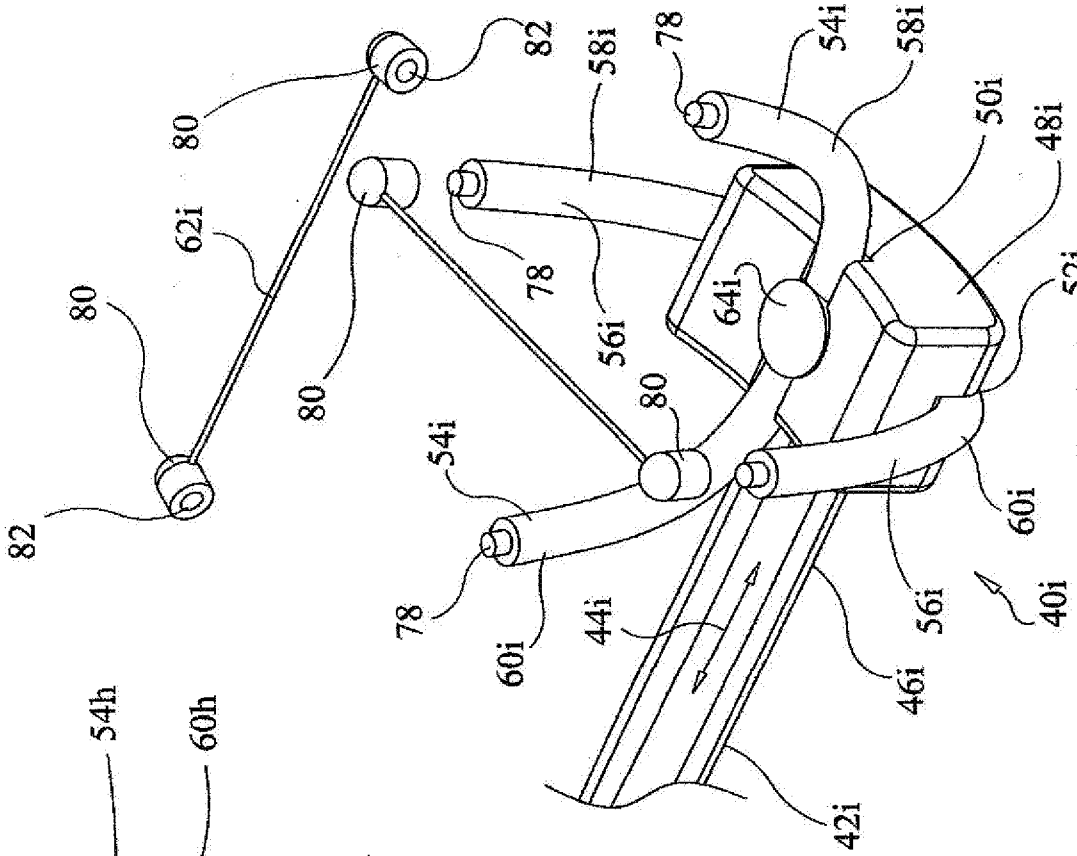
82
80
62i
80
82
80
78
58i
78
54i
58i
50i
48i
56i
64i
52i
80
54i
78
60i
44i
46i
56i
60i
40i
42i

FIG. 9

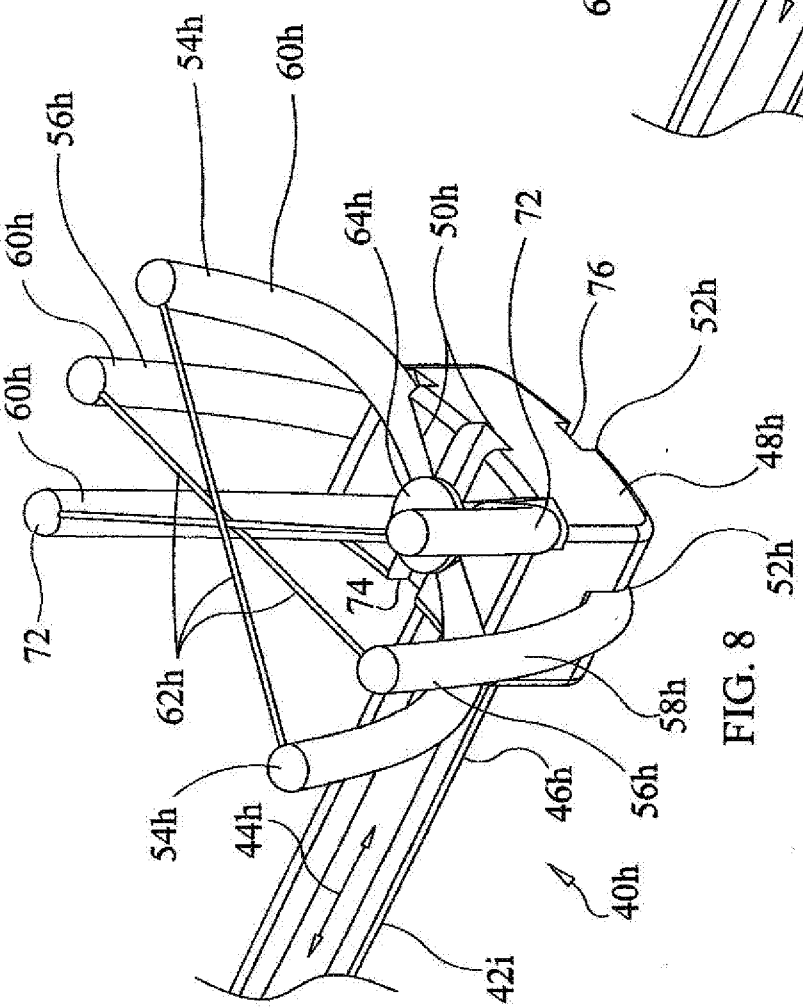
60h
60h
56h
54h
60h
64h
50h
72
76
52h
48h
72
62h
74
52h
58h
54h
44h
46h
56h
40h
42i

FIG. 8

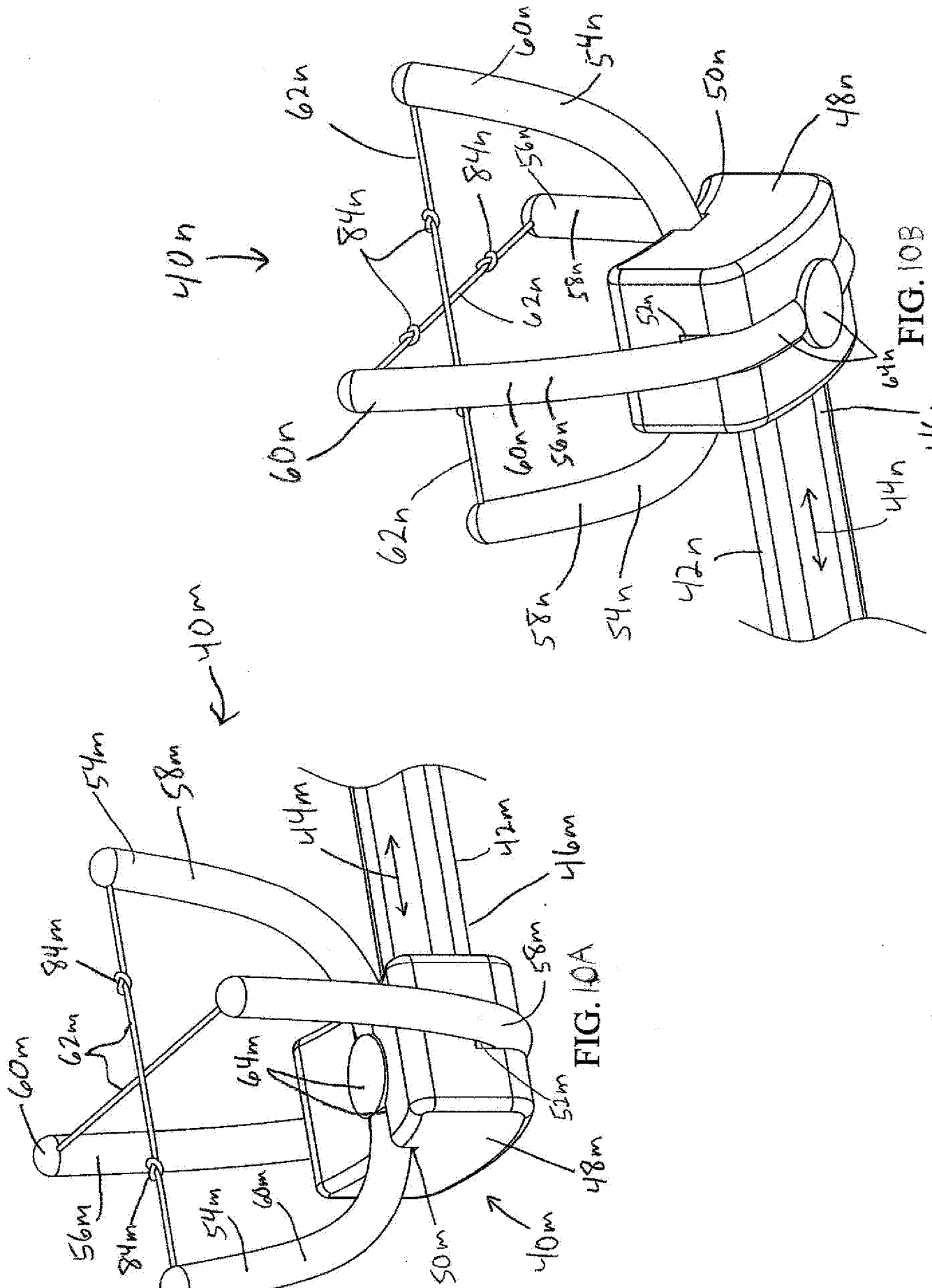

FIG. 10A

FIG. 10B

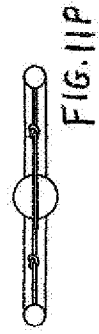
FIG. 11P

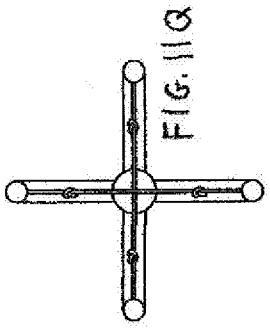
FIG. 11Q

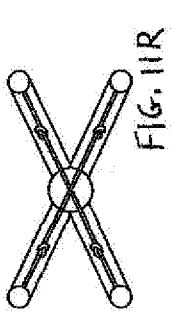
FIG. 11R

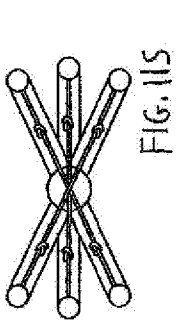
FIG. 11S

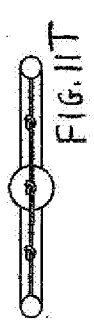
FIG. 11T

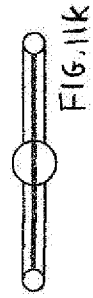
FIG. 11K

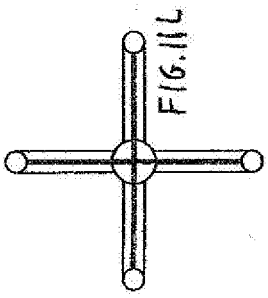
FIG. 11L

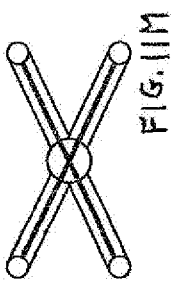
FIG. 11M

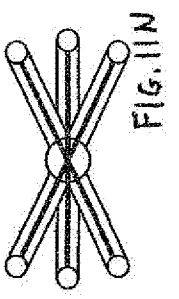
FIG. 11N

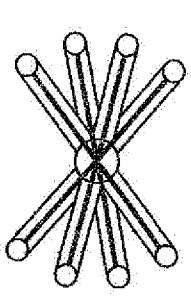
FIG. 11-O

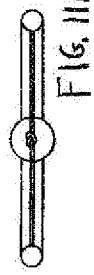
FIG. 11F

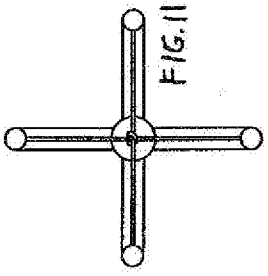
FIG. 11G

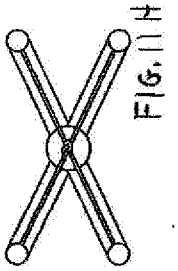
FIG. 11H

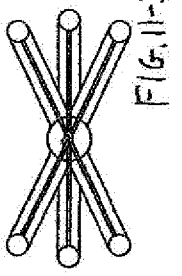
FIG. 11-I

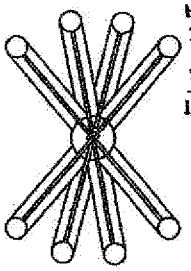
FIG. 11J

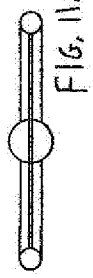
FIG. 11A

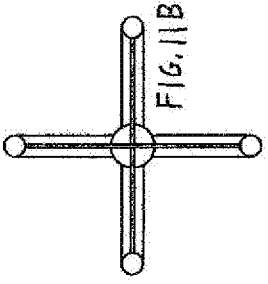
FIG. 11B

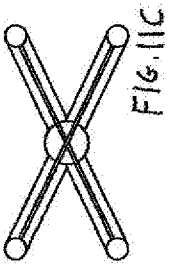
FIG. 11C

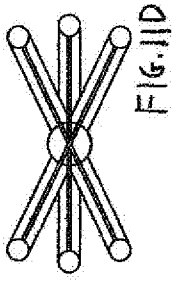
FIG. 11D

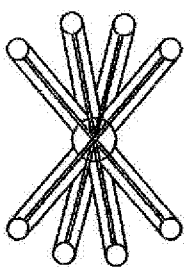
FIG. 11E

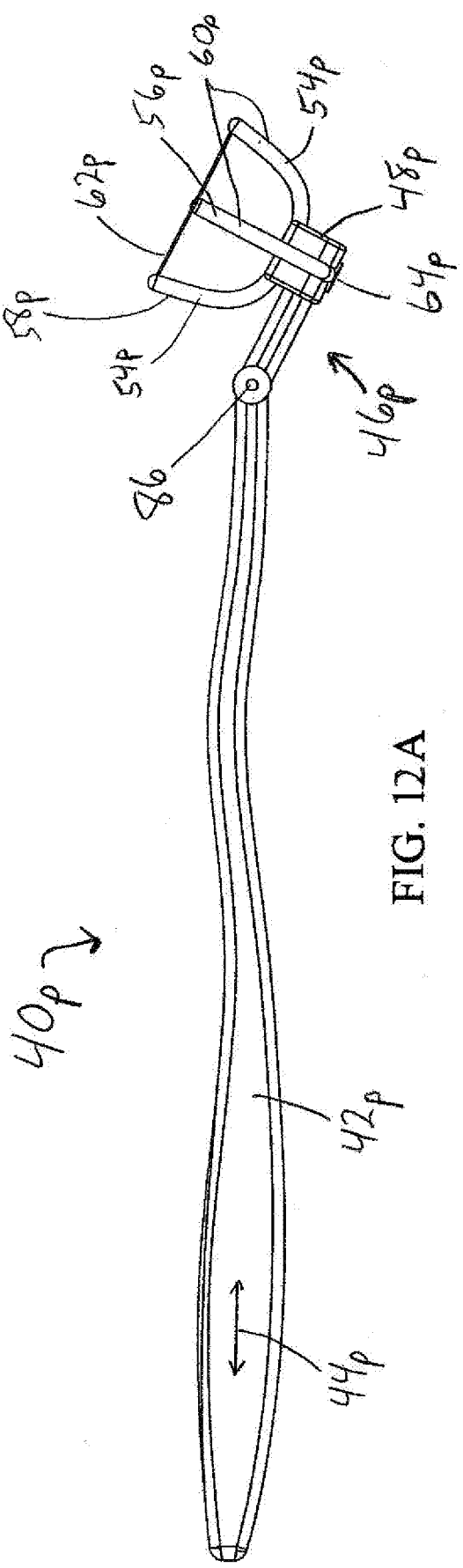

FIG. 12A

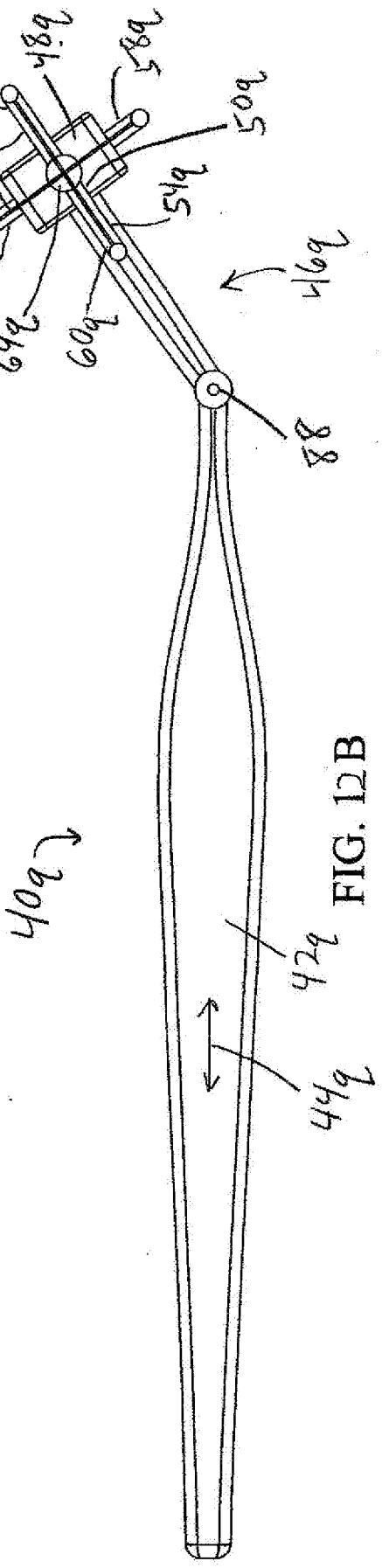

FIG. 12B

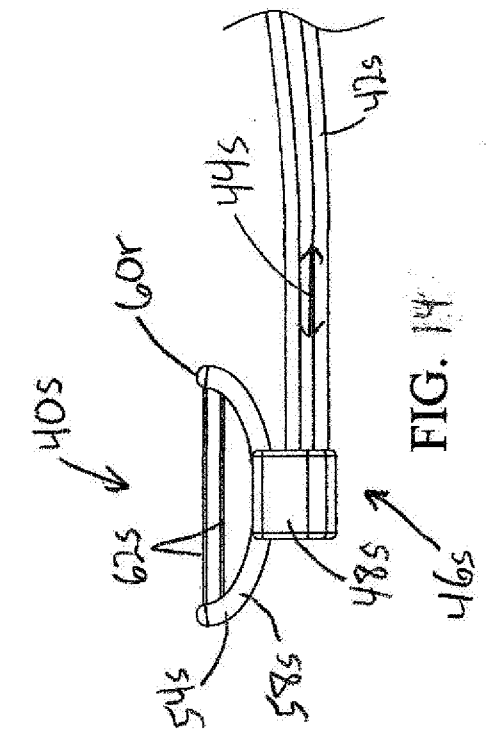

FIG. 14

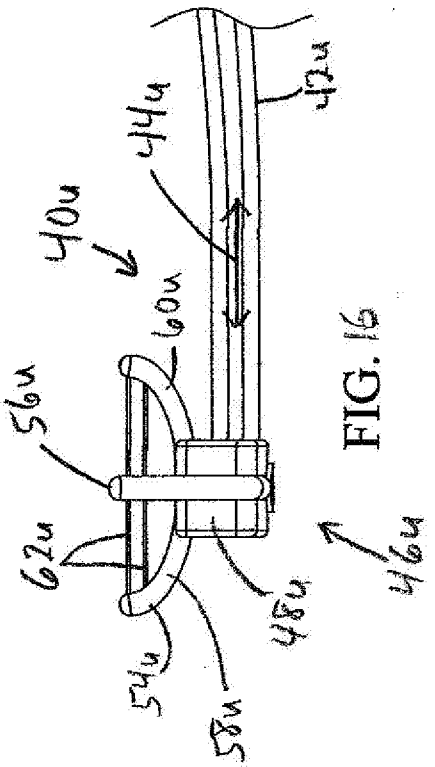

FIG. 16

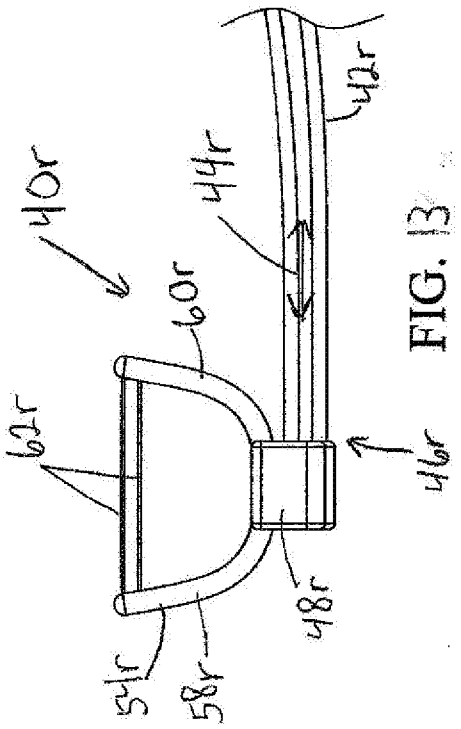

FIG. 13

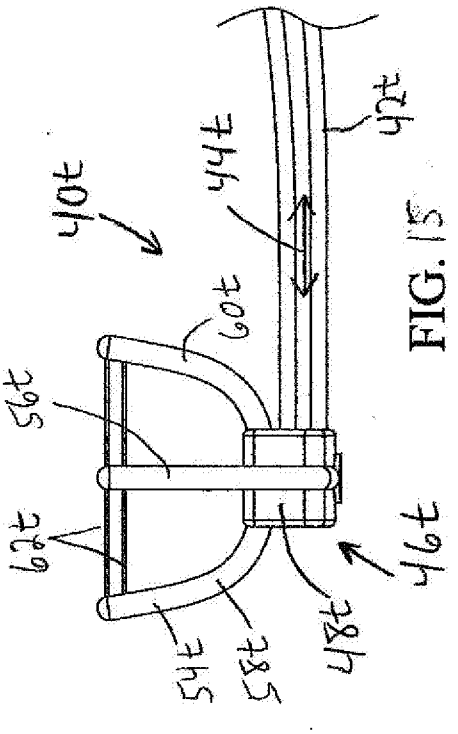

FIG. 15

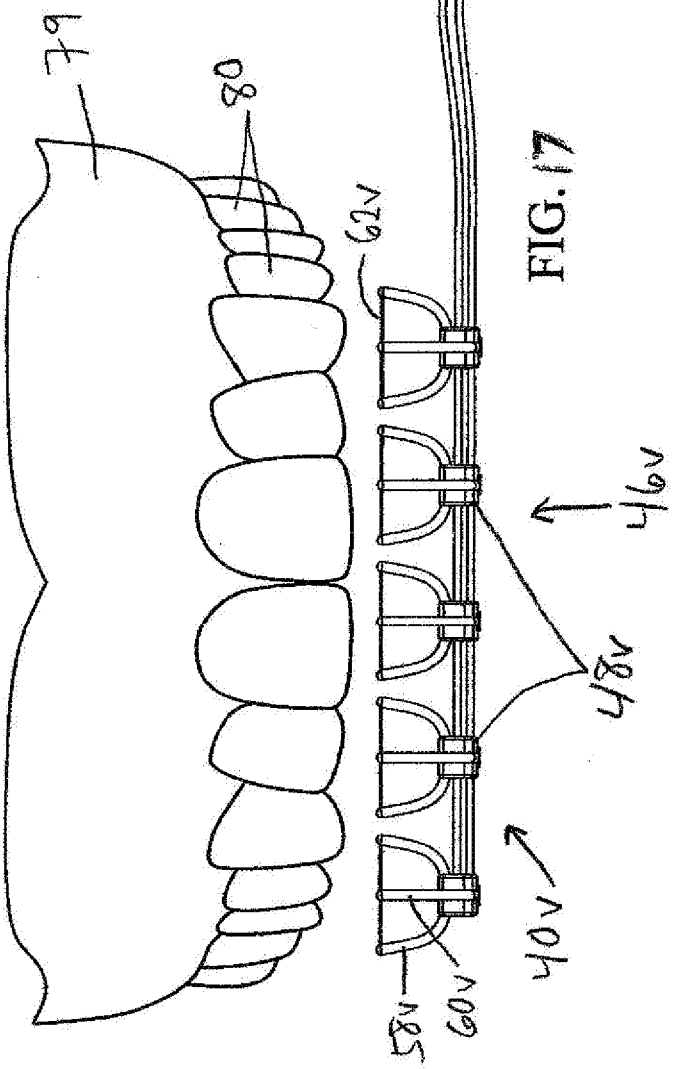
42v
44v
79
80
62v
58v
60v
40v
46v
48v

FIG. 17

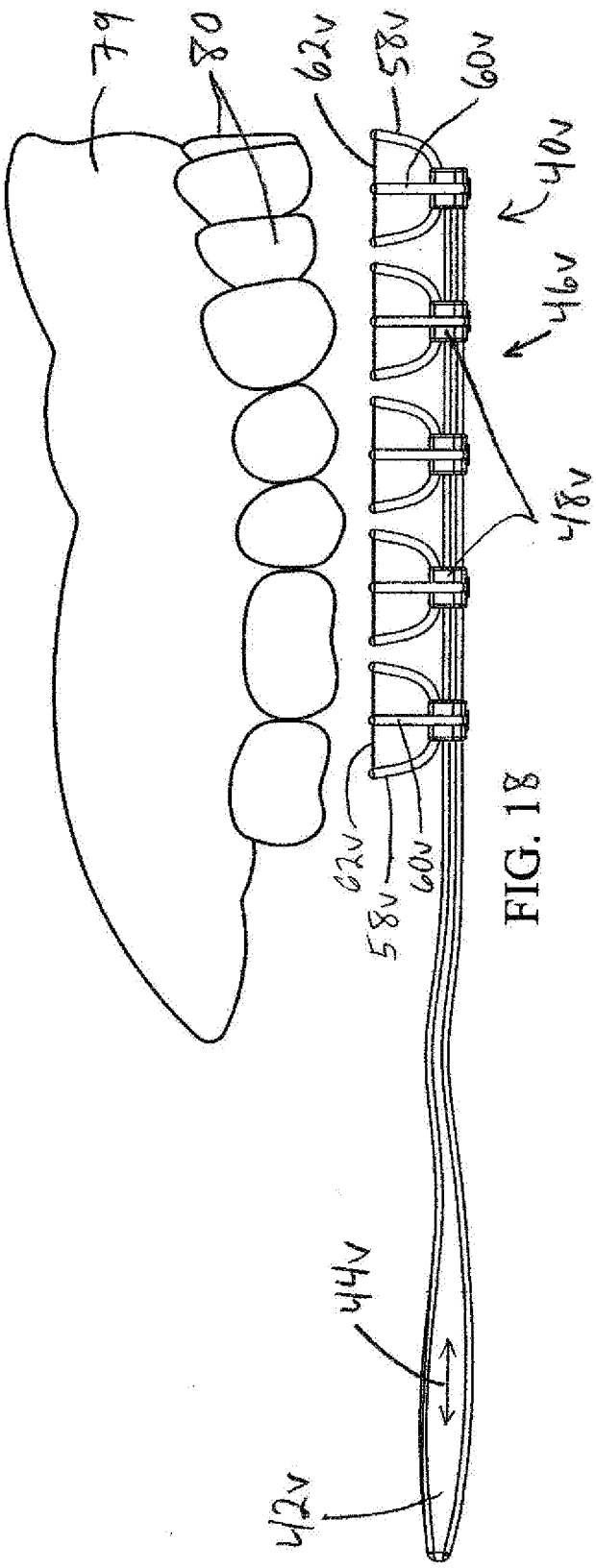
79
80
62v
58v
60v
40v
46v
48v
62v
58v
60v
44v
42v

FIG. 18

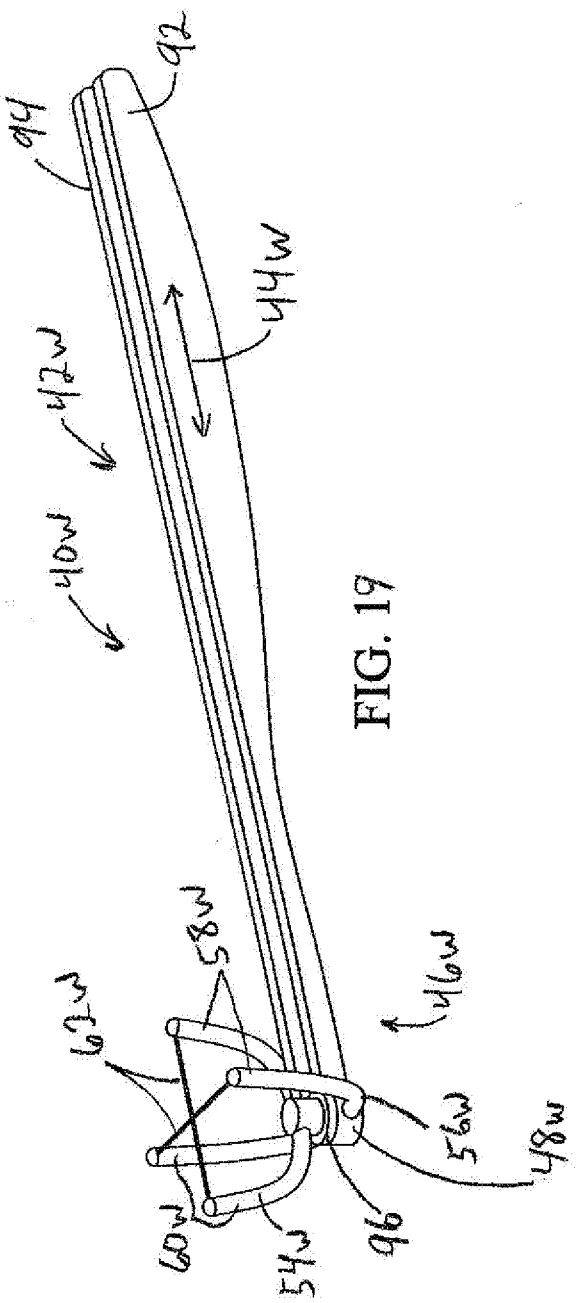
92
94
44W
42W
40W
58W
62W
46W
56W
48W
60W
54W
96

FIG. 19

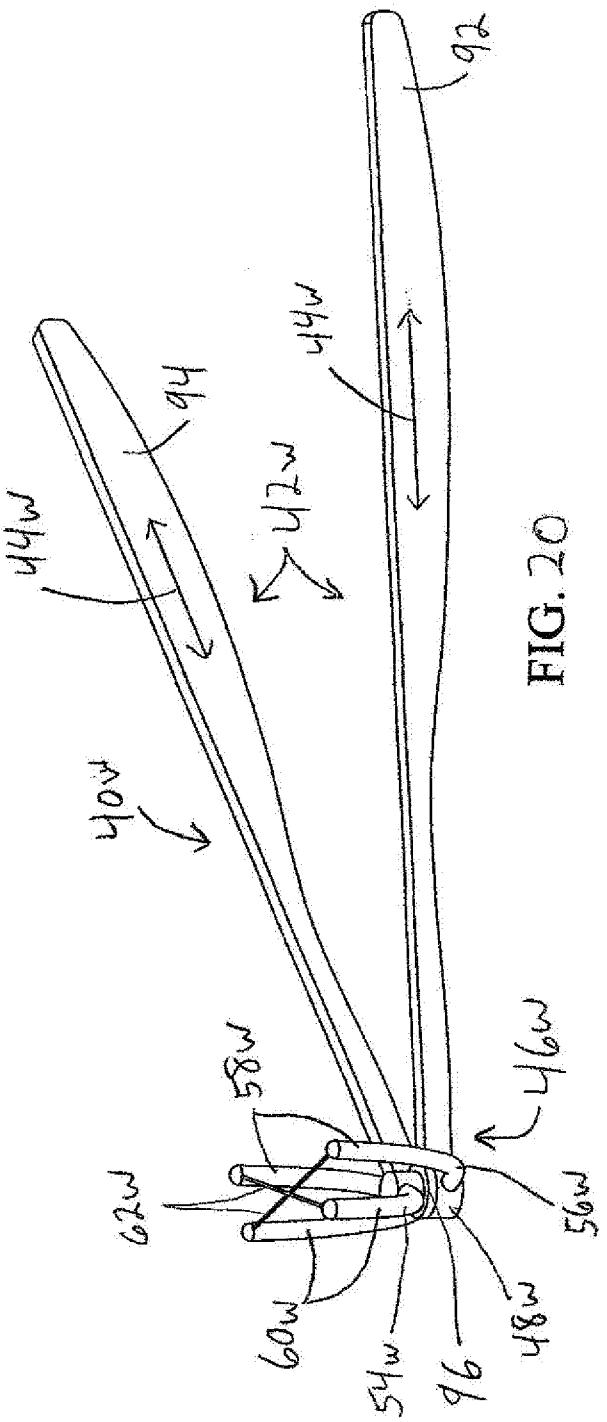
92
94
44W
42W
40W
58W
62W
46W
56W
48W
60W
54W
96

FIG. 20

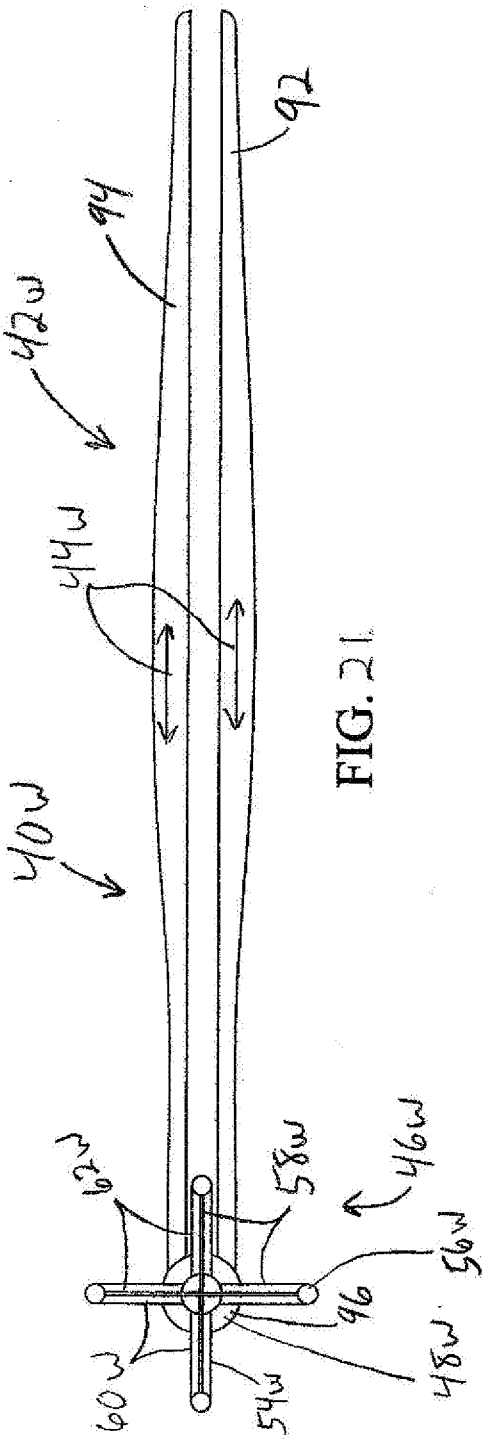
92
94
42W
44W
40W
46W
58W
62W
56W
96
48W
60W
54W

FIG. 21

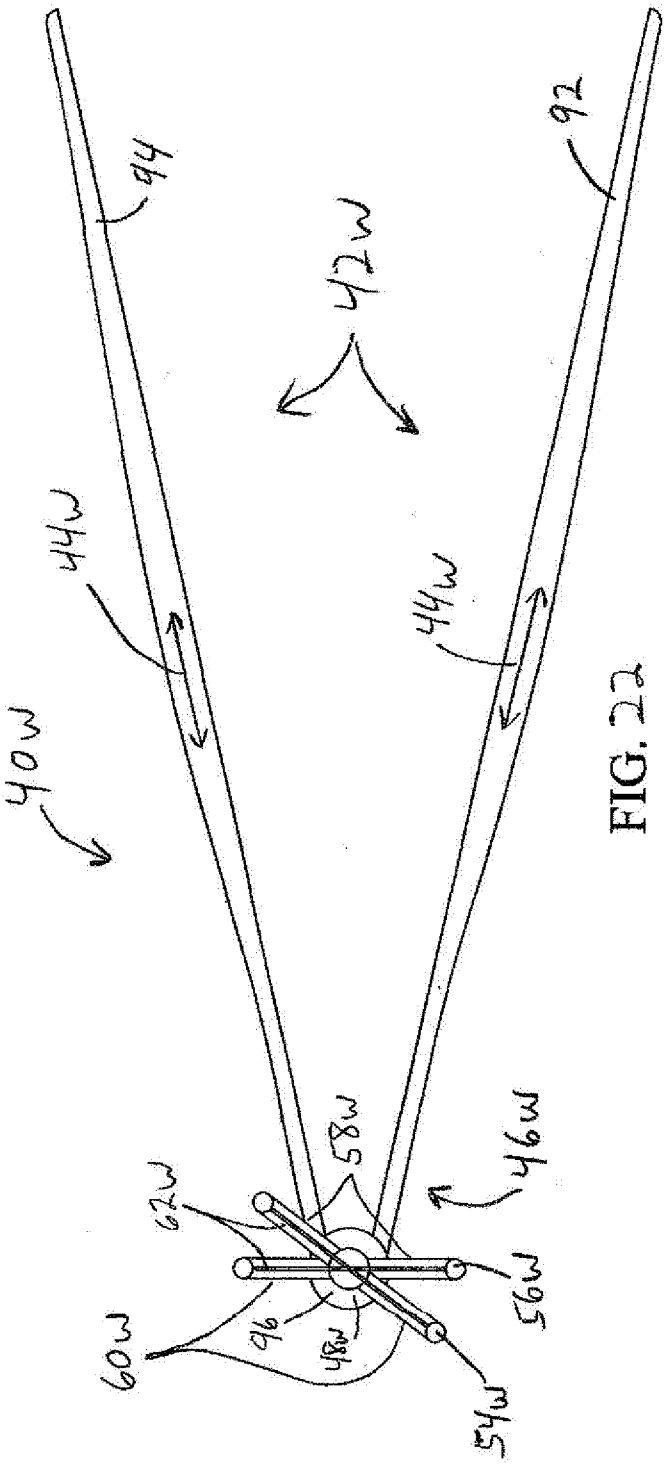
94
92
42W
44W
44W
40W
58W
62W
46W
56W
96
48W
60W
54W

FIG. 22

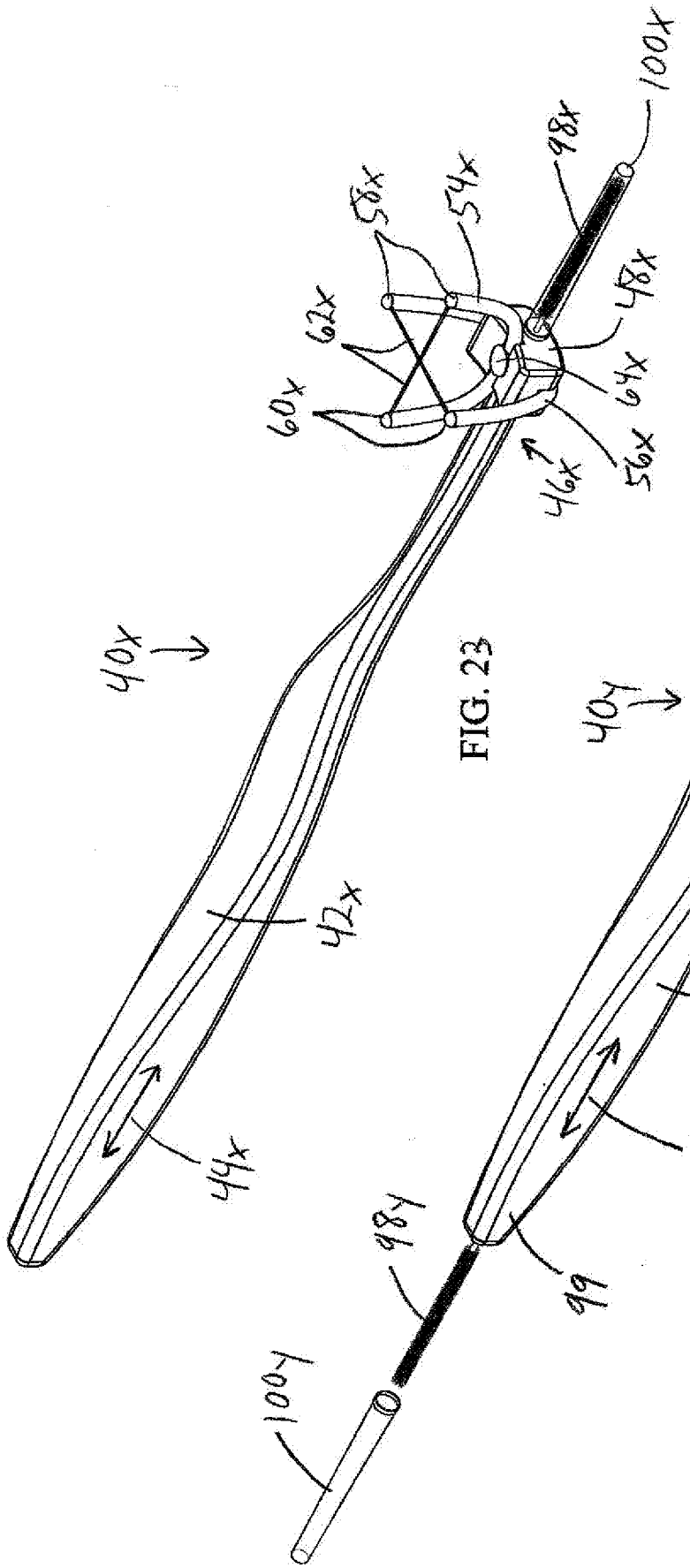
100X
98X
58X
54X
62X
60X
48X
64X
56X
46X
40X
42X
44X
98Y
100Y
99

FIG. 23

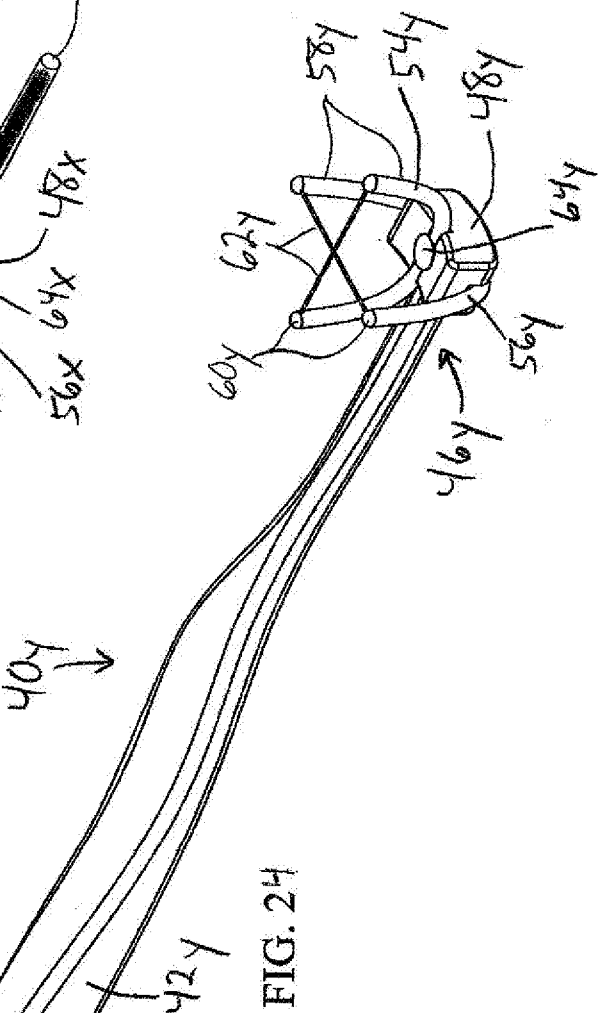
58Y
54Y
48Y
64Y
62Y
60Y
52Y
46Y
40Y
42Y
44Y

FIG. 24

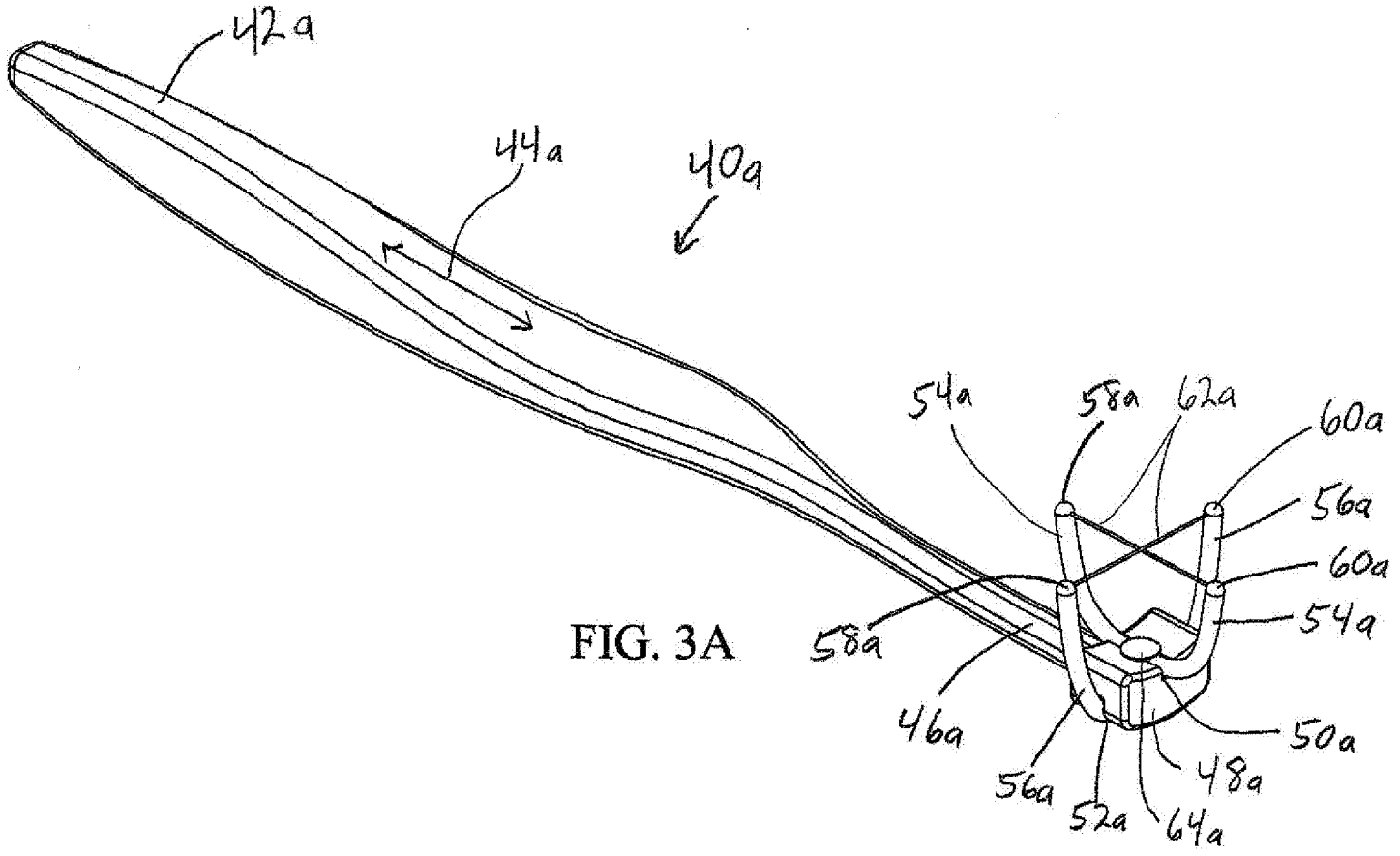
42a
44a
40a
54a
58a
62a
60a
56a
60a
54a
58a
46a
50a
56a
52a
48a
64a

FIG. 3A