June 1, 1943. F. BENT 2,320,906

FLUSH TANK SILENCER

Filed Nov. 5, 1941

FIG. 1.

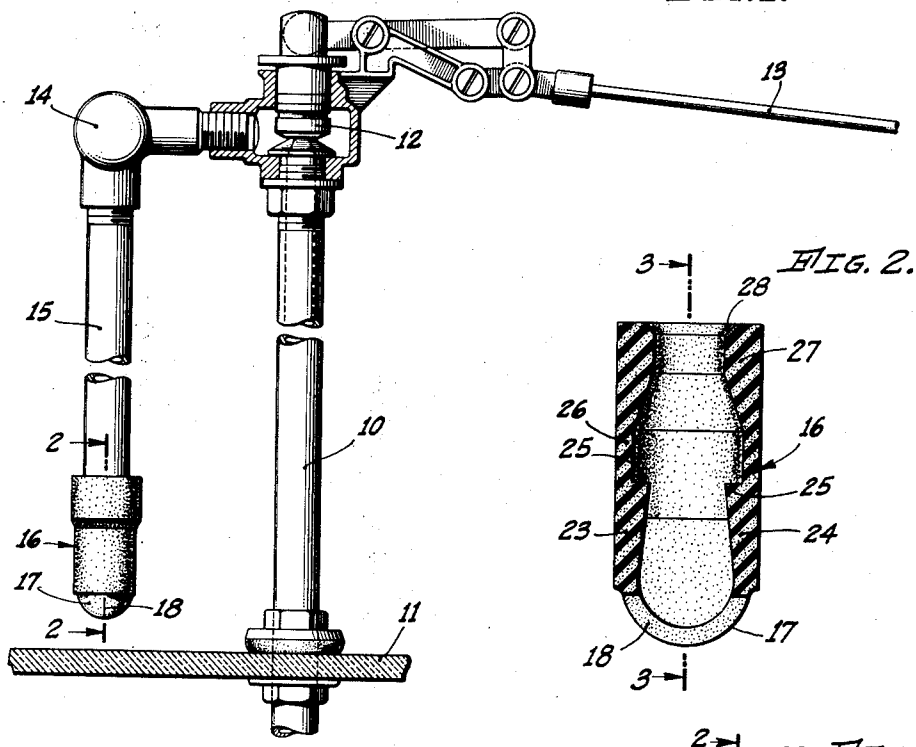

FIG. 2.

FIG. 4.

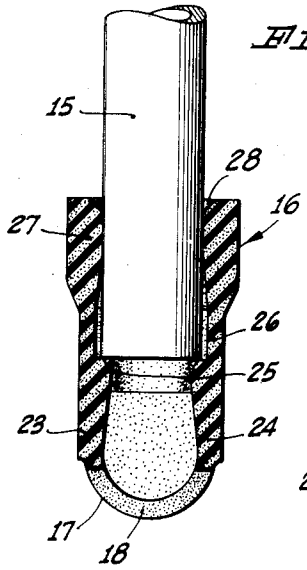

FIG. 3.

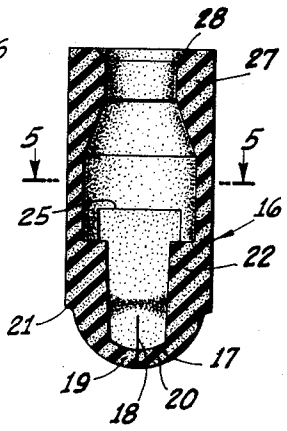

FIG. 5.

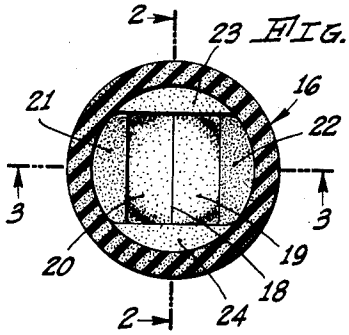

INVENTOR
FRANKLIN BENT
BY Hazard and Miller
ATTORNEYS.

Patented June 1, 1943

2,320,906

UNITED STATES PATENT OFFICE

2,320,906

FLUSH TANK SILENCER

Franklin Bent, Los Angeles, Calif., assignor to Janet M. Bales, Los Angeles, Calif.

Application November 5, 1941, Serial No. 417,883

2 Claims. (Cl. 181—33)

This invention relates to improvements in flush tank silencers, and may be considered as an improvement over the low tank silencer disclosed in the application of Wade V. Heare, Serial No. 405,333, filed August 4, 1941, which issued on August 11, 1942, as Patent No. 2,292,689.

An object of the invention is to provide a flush tank silencer consisting of a tubular rubber body capable of being telescoped over the hush tube of a flush tank which has its lower end normally closed but openable through a slit, the sides of the slit being relatively thick so as to tend to cause the construction to retain its original shape.

Another object of the invention is to provide a flush tank silencer consisting of a tubular rubber body adapted to be telescoped over the lower end of a hush tube having a normally closed lower end and which has an internal shoulder engageable by the bottom of the hush tube so that the telescoping movement of the silencer onto the hush tube will be automatically limited to position the opening from the silencer in correct position with respect to the bottom of the hush tube.

A further object of the invention is to provide a silencer for flush tanks wherein the body is internally thickened adjacent its top to enable it to be applied to hush tubes of various sizes yet which will effectively grip upon the hush tube to prevent the silencer from being forced off under the issuing water pressure.

With the foregoing and other objects in view, which will be made manifest in the following detailed description and specifically pointed out in the appended claims, reference is had to the accompanying drawing for an illustrative embodiment of the invention, wherein:

Figure 1 is a view in side elevation of the valve and hush tube in a flush tank, parts being broken away and shown in vertical section and illustrating the flush tank silencer embodying the present invention as applied thereto;

Fig. 2 is a vertical section taken through the flush tank silencer embodying the present invention in the plane of the diametrical slit and may be regarded as a sectional view taken upon the line 2—2 upon Fig. 5;

Fig. 3 is a sectional view through the silencer taken substantially upon the line 3—3 upon Fig. 2;

Fig. 4 is a view in side elevation of the lower portion of the hush tube illustrating the silencer embodying the present invention as having been applied thereto, the silencer being illustrated in vertical section; and

Fig. 5 is a horizontal section taken substantially upon the line 5—5 upon Fig. 3.

Referring to the accompanying drawing wherein similar reference characters designate similar parts throughout, 10 indicates a water supply pipe leading into a flush tank, the bottom of which is indicated at 11. On the top of the pipe 10 there is a valve 12 that is controlled by a float, not shown, that is mounted on a float arm 13. 14 indicates an elbow that connects the valve housing with a downwardly directed hush tube 15.

The silencer embodying the present invention comprises a one-piece tubular rubber body 16 having a hemispherical, normally closed lower end 17 that is traversed by a diametrical slit or knife-cut 18. The slit 18 is very thin and the lips 19 and 20 on opposite sides thereof are normally in contact with each other. On opposite sides of the slit the body is internally thickened as indicated at 21, and 22, so that the two opposed sides are relatively thick and stiff tending to keep the lips 19 and 20 in engagement with each other. The end walls as indicated in Fig. 4, are somewhat thinner as indicated at 23 and 24 and these thin portions thicken upwardly to provide upwardly facing shoulders 25 engageable with the bottom of the hush tube 15 to limit upward movement of the silencer on the hush tube. Above the shoulder 25, the side walls of the body are relatively thin as indicated at 26 and adjacent the upper end of the body it is again internally thickened as indicated at 27, there being a downwardly divergent interior below the thickened portion 27 connecting the thickened portion with the thin side walls 26.

The operation and advantages of the improved flush tank silencer are as follows. The silencer is applied to the hush tube 15 by forcing it onto the end of the hush tube. The chamfered or beveled entrance 28 facilitates the application of the silencer to the hush tube. During this application the thickened portion 27 is caused to expand as illustrated in Fig. 4. The silencer is forced onto the hush tube until the shoulder 25 engages the bottom of the hush tube. In this position as the thickened portion 27 has been materially expanded it will effectively grip the hush tube to keep the silencer in applied position thereon.

When the valve 12 is opened, water passing therethrough from pipe 10 to the hush tube 15 forces the lips 19 and 20 apart. The issuing water discharges through the silencer in the form

of a very thin, wide stream which is virtually noiseless. The resilient thickened portions 21 and 22 continually urge the lips 19 and 20 into engagement so that the silencer maintains some back pressure in the hush tube that avoids chattering of the valve 12.

The improved silencer may be easily molded in rubber molds and applied to the hush tube. Although the hush tube may vary in diameter the internal diameter within the thickened portion 27 is such that the silencer is applicable to virtually all ordinary sizes, yet it is capable of effectively gripping the hush tube to prevent the silencer being forced off by the water pressure within the hush tube.

While I have described the silencer as being formed of rubber it will be understood either natural or synthetic rubber may be used therefor or any ordinary rubber substitute that will not deteriorate rapidly in water may be used for the construction of the silencer.

Various changes may be made in the details of construction without departing from the spirit or scope of the invention as defined by the appended claims.

I claim:

1. A flush tank silencer comprising a tubular rubber body adapted to be telescoped onto a hush tube, the lower end of the body being normally closed and slitted, the portions of the body on opposite sides of the slit being thicker than the body portions at the ends of the slit, and the tops of the relatively thin portions providing an upwardly facing shoulder engageable by the bottom of the hush tube.

2. A flush tank silencer comprising a tubular rubber body adapted to be telescoped onto the hush tube, the top of the body being internally thickened and the interior presenting walls diverging downwardly so that the walls of the body are relatively thin below the thickened portion, the bottom of the body being hemispherically shaped and diametrically slitted, the walls of the body on opposite sides of the slit being thickened and the walls of the body at the ends of the slit being upwardly thickened and forming upwardly facing shoulders engageable by the bottom of a hush tube.

FRANKLIN BENT.