US00D727720S

(12) United States Design Patent

Schermer

(10) Patent No.: US D727,720 S
(45) Date of Patent: ** Apr. 28, 2015

(54) **WHEEL LOCK**

(71) Applicant: **Peter J. Schermer**, Los Angeles, CA (US)

(72) Inventor: **Peter J. Schermer**, Los Angeles, CA (US)

(73) Assignee: **Amcor Industries, Inc.**, Los Angeles, CA (US)

(**) Term: **14 Years**

(21) Appl. No.: **29/471,588**

(22) Filed: **Nov. 1, 2013**

(51) **LOC (10) Cl.** **08-08**

(52) **U.S. Cl.**
USPC **D8/397**

(58) **Field of Classification Search**
USPC D8/397, 394, 382, 349, 399, 387, 392; 411/427, 429, 432, 918, 179, 180, 190, 411/327, 531; D23/303; 605/232; 248/154
See application file for complete search history.

(56) **References Cited**

U.S. PATENT DOCUMENTS

D203,947	S	*	3/1966	Pick	D8/387
D262,863	S	*	2/1982	Barnsdale	D8/385
D308,982	S	*	7/1990	Moore	D16/132
D482,761	S	*	11/2003	Gotoh et al.	D23/262
D511,499	S	*	11/2005	Chung	D13/154
D557,132	S	*	12/2007	Shinjo	D8/397
D558,037	S	*	12/2007	Chelchowski et al.	D8/382
7,550,669	B2	*	6/2009	Rizzuto, Jr.	174/68.1
D600,546	S	*	9/2009	Scilingo et al.	D8/397
D608,294	S	*	1/2010	Shaw	D13/151
D623,049	S	*	9/2010	Zeyfang	D8/397
D625,170	S	*	10/2010	McGrath	D8/355
D637,907	S	*	5/2011	Maxa et al.	D9/452
7,952,034	B2	*	5/2011	Kiely et al.	174/650
D649,031	S	*	11/2011	Rand	D8/397
D698,637	S	*	2/2014	Su	D8/397
D706,126	S	*	6/2014	Orow	D8/397
D718,121	S	*	11/2014	Yu	D8/382

* cited by examiner

Primary Examiner — Cynthia Underwood
(74) *Attorney, Agent, or Firm* — Sheppard Mullin Richter & Hampton LLP

(57) **CLAIM**

The ornamental design for a wheel lock, as shown and described.

DESCRIPTION

FIG. **1** is a front perspective view of a wheel lock showing my new design;
FIG. **2** is a rear perspective view thereof;
FIG. **3** is a top view thereof;
FIG. **4** is a bottom view thereof;
FIG. **5** is a front elevational view thereof;
FIG. **6** is a rear elevational view thereof;
FIG. **7** is a left view thereof; and,
FIG. **8** is a right view thereof.
The broken lines in the accompanying drawings represent portions of the design which form no part of the claimed design.

1 Claim, 4 Drawing Sheets

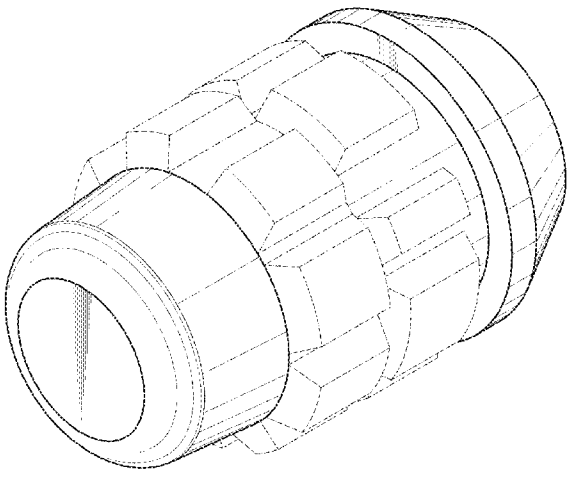

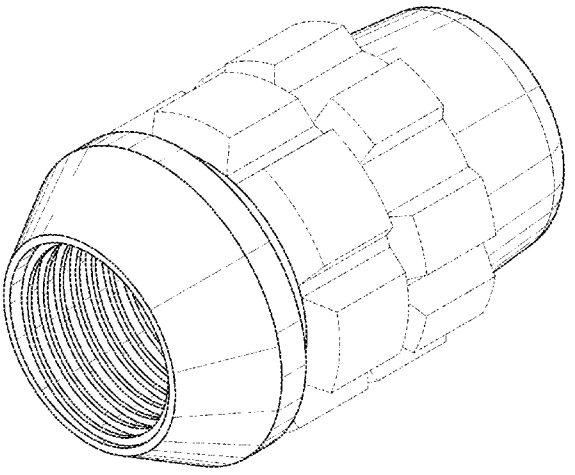

FIG. 1

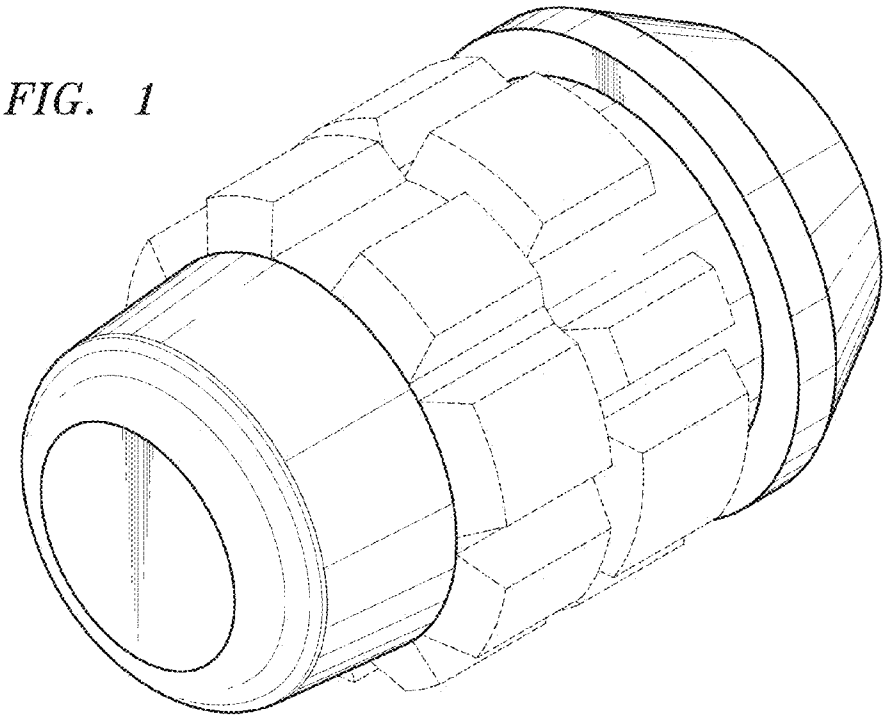

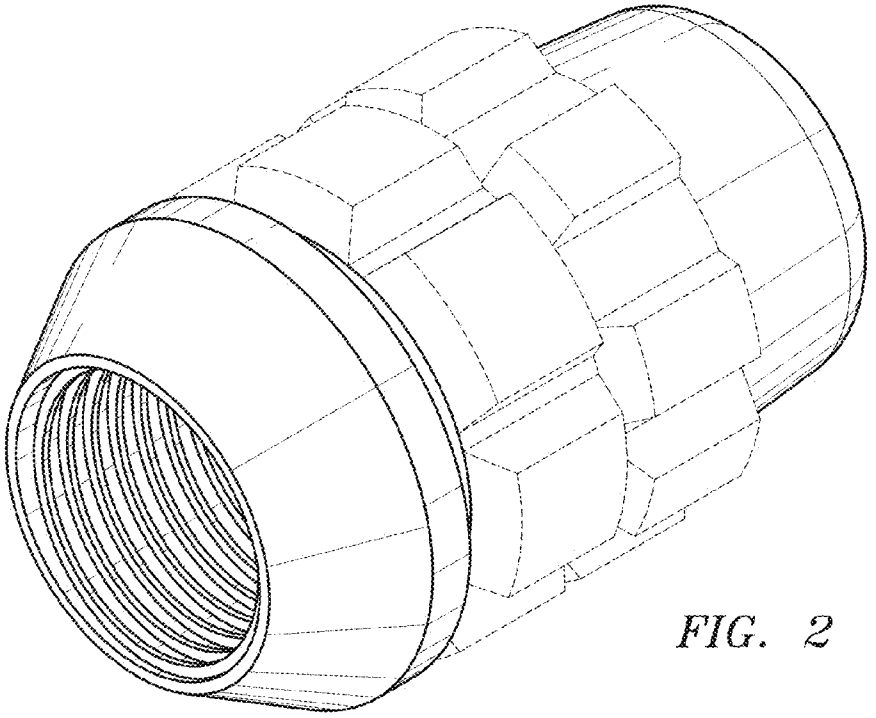

FIG. 2

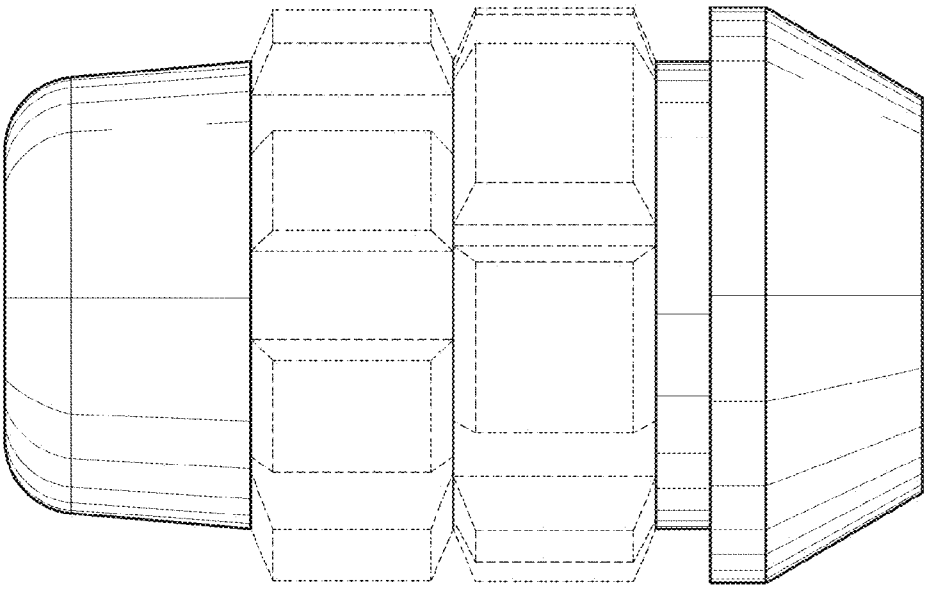

FIG. 3

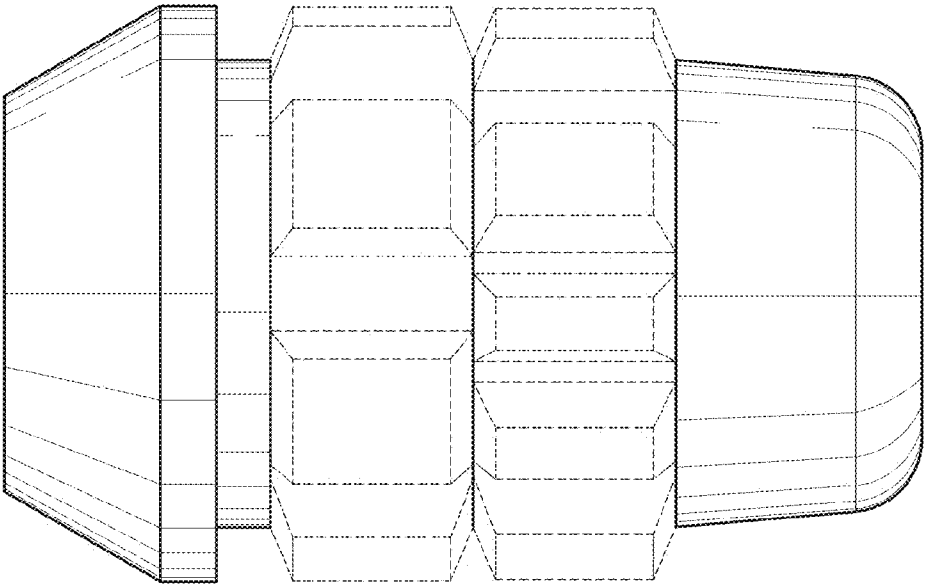

FIG. 4

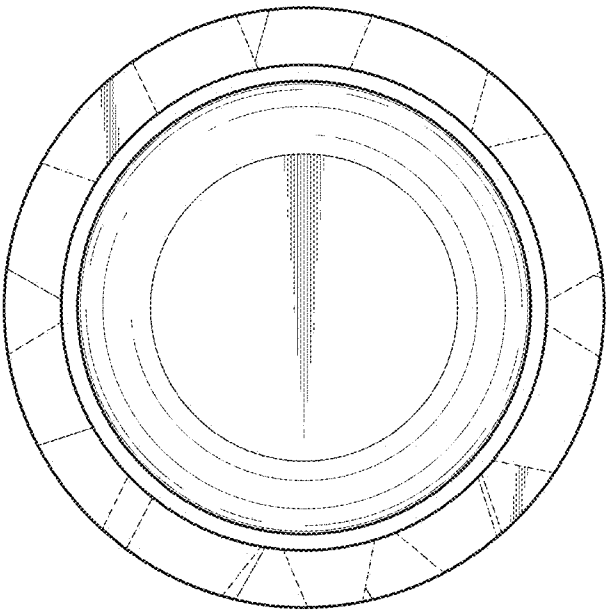

FIG. 5

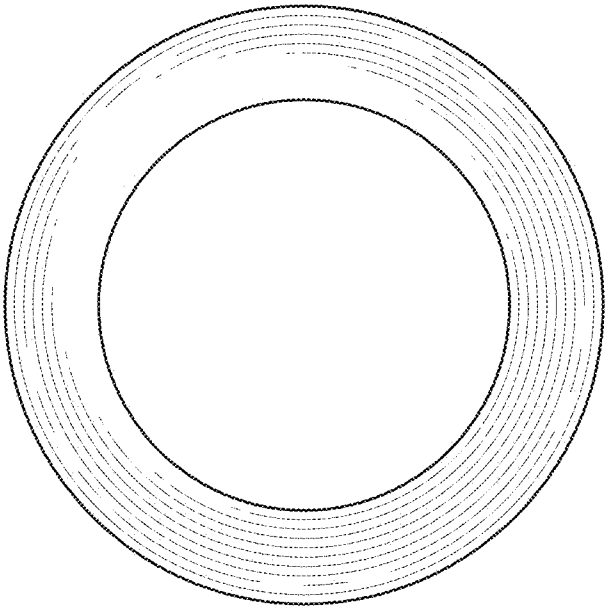

FIG. 6

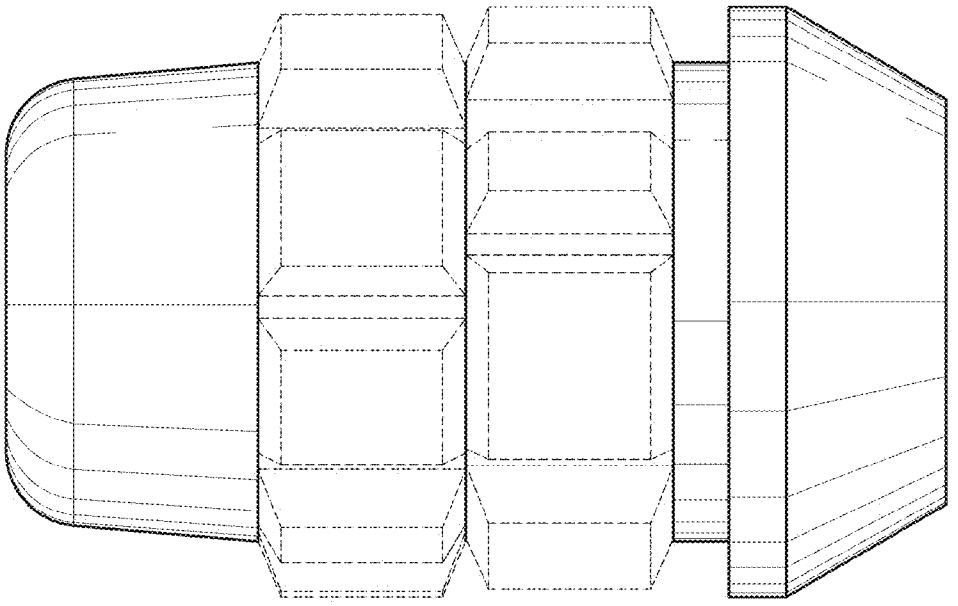

FIG. 7

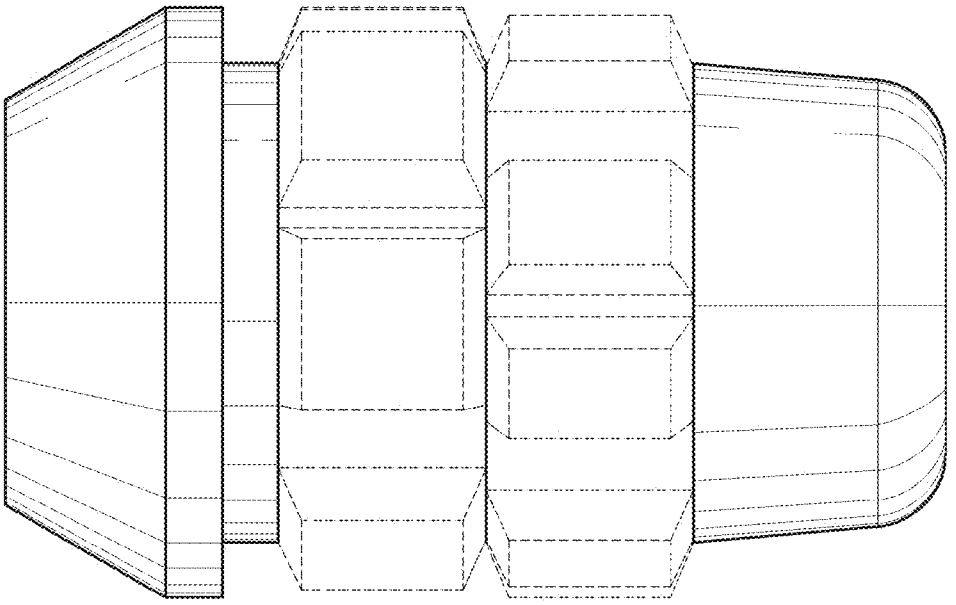

FIG. 8