United States Patent [19]

Fischer et al.

[11] **3,895,325**

[45] **July 15, 1975**

[54] **VARIABLE OSCILLATING CIRCUIT ARRANGEMENT FOR UHF RANGE**

[75] Inventors: **Bertram Fischer**, Deisslingen; **Gerhard Maier**, Schwenningen, both of Germany

[73] Assignee: **GTE International Incorporated**, Stamford, Conn.

[22] Filed: **Apr. 30, 1974**

[21] Appl. No.: **465,706**

[52] **U.S. Cl.** ..... **333/70 S**; 333/73 R; 333/82 A; 334/15; 334/45; 334/65; 336/200

[51] **Int. Cl.²** **H03H 13/00**; H03H 5/12

[58] **Field of Search** ..... 334/15, 41–45, 334/74–77, 70, 89, 65; 333/70 S, 73 R, 73 S, 76, 82 R, 82 A; 336/200

[56] **References Cited**

UNITED STATES PATENTS

2,611,088	9/1952	Harvey	333/82 R
2,702,373	2/1955	Pan	333/82 R
3,484,697	12/1969	Abend	336/200
3,516,030	6/1970	Brumbelow	333/73 R

FOREIGN PATENTS OR APPLICATIONS

718,562	11/1954	United Kingdom	333/73 R

Primary Examiner—Alfred E. Smith
Assistant Examiner—Wm. H. Punter
Attorney, Agent, or Firm—Theodore C. Jay, Jr.; Robert T. Orner; Thomas H. Buffton

[57] **ABSTRACT**

The invention relates to variable oscillating circuit arrangements with several coupled circuits for the UHF-ranges and especially for transistorized UHF-television tuners tuned with capacitive diodes in which at least two such oscillating circuit arrangements are used per set and the inductances are constructed with less than one turn each.

1 Claim, 3 Drawing Figures

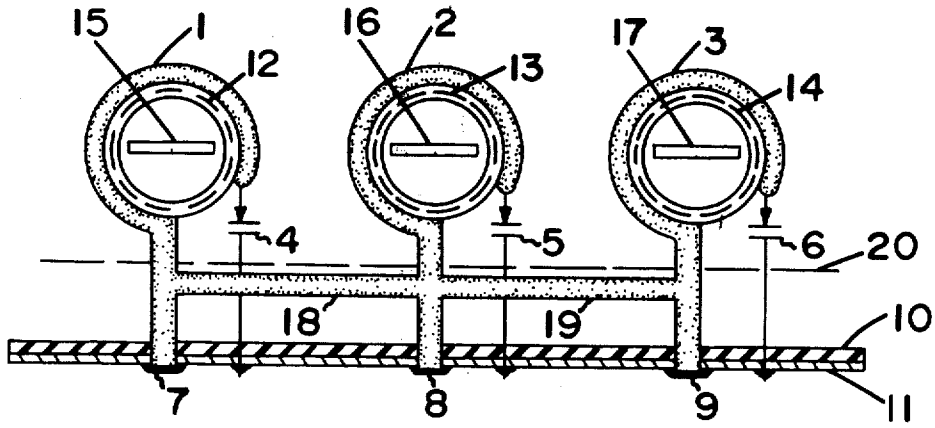

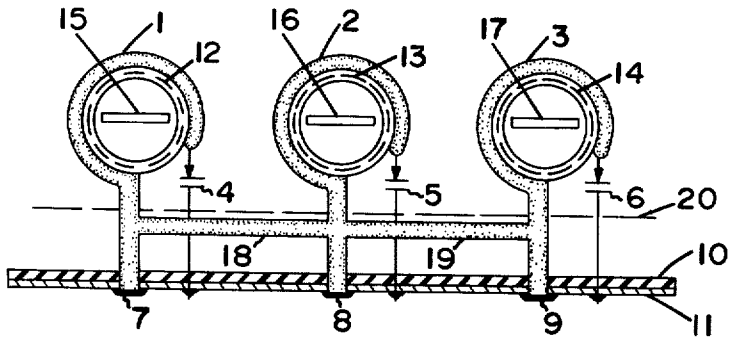

Fig. 1

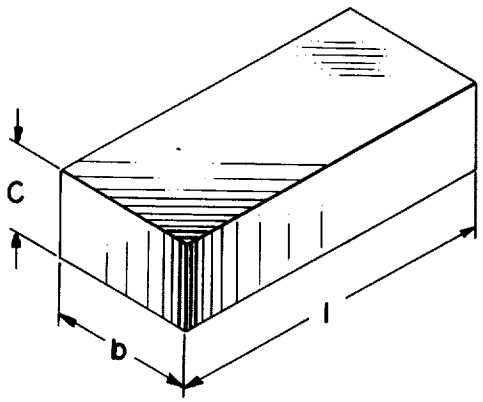

Fig. 2

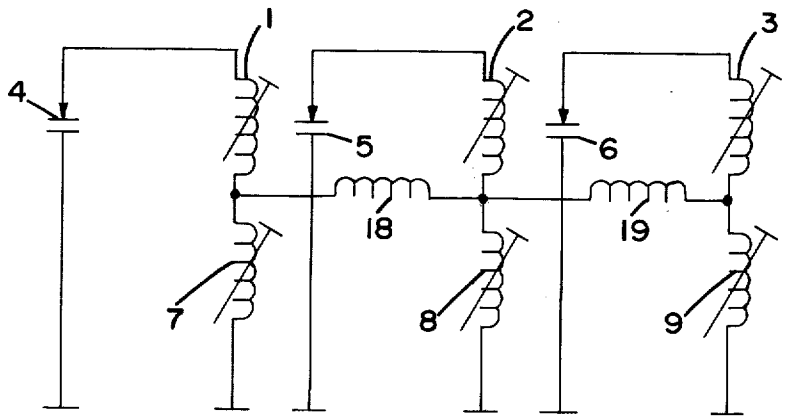

Fig. 3

VARIABLE OSCILLATING CIRCUIT ARRANGEMENT FOR UHF RANGE

CROSS REFERENCE TO OTHER APPLICATIONS

A co-pending application entitled "A Variable Predominately Inductive Resonant Circuit Arrangement For the UHF Range" bearing U.S. Ser. No. 465,859 and assigned to the assignee of the present application relates to an inductive resonant circuit assembly employing an arcuate conductor strip.

BACKGROUND OF THE INVENTION

Oscillating circuit configurations for the UHF range are either built up in discrete from or by using cavity resonators. Examples are given in W. Germany Patent Script No. 1,277,392, and W. Germany Patent Script No. 1,111,682, W. Germany Auslegeschrift 1,253,788, and W. Germany Patent Script. No. 1,271,798 respectively. While cavity resonators bear rather heavily upon the production cost and especially the cost of alignment, this type of component can only be fabricated with larger tolerances. Unfortunately, larger tolerances makes time consuming alignment necessary if alterations, such as a change of wave impedance, occur.

Other ways have been found as set forth in W. Germany Patent Script No. 1,277,392. Therein, an inductive tuning device with a circular tuning mechanism bending over an arc of less than 360° and with a stationary slider is described. Another solution uses circular Lecher lines with movable sliding contacts as per W. Germany Script No. 1,111,682.

In the course of miniaturization and in order to simplify the construction design and reduce the fabricating costs, the above-mentioned types of resonant circuits for UHF have been realized with printed circuits. As a result, there has been provided quasi-cavity resonators and strip-conducting tuners as can be seen from W. Germany Patent Script No. 1,296,225 and W. Germany Auslegeschrift 1,271,222.

As can be seen from W. Germany Auslegeschrift and W. Germany Patent Script 1,198,425; W. Germany Auslegeschrift and W. Germany Patent Script 1,271,788; W. Germany Auslegeschrift and W. Germany Patent Script 1,271,789; W. Germany Auslegeschrift and W. Germany Patent Script 1,766,734; W. Germany Auslegeschrift and W. Germany Patent Script 1,766,682, transistorized tuner circuits with capacitor diodes are known and have today generally asserted themselves. In spite of the fact that discrete inductivities for UHF oscillating circuits in tuner circuits, calculated according to the Thompson oscillating circuit formula, offer a better field distribution and easier realizable shielding than cavity resonators, cavity resonators are used much more frequently in practice.

These oscillatory circuit configurations which may be conducting circuits, strip-conducting circuits, cavity resonators or quasi-cavity resonators are actually coaxial oscillating circuits and are subject to the more or less complicated field distribution typical for these configurations. Although in theory cavity resonators possess a homogeneous field distribution, this field is disturbed by indispensable pickup and feeding loops. When aligning, the inside conductor often has to be bent which results in partial variations of the wave impedance and, consequently, in an additional disturbance of the field distribution.

Coaxial oscillating circuits are superior to discrete configurations, especially in the upper UHF-range, but it is difficult to perfectly shield coaxial oscillating circuits. More specifically, immunity against interfering radiation is difficult because of the necessary field distribution and also because parts in the surrounding housing are carriers of HF-energy.

A tendency toward the usage of discrete circuits and air coils or core coils with several turns is becoming apparent, especially in the course of partial of full integration, because of immunity to interfering radiations and because of the simplicity of alignment. These elements, however, have the decisiive disadvantages that undesired stray capacities may appear signifying a range limitation. Also, larger tolerances of the coil can complicate alignment procedures. Specifically, the formation of printed circuit coils undesirably leads to distributed capacities which, in the UHF-range, result in LC series circuits having resonance frequencies that may be within the signal reception range and will then cause the so-called "absorption spots".

OBJECTS AND SUMMARY OF THE INVENTION

An object of the present invention is to provide enhanced inductive oscillating circuits which avoid the above-mentioned disadvantages. Another object of the invention is to provide an improved inductive oscillating circuit having one piece of conductive material which is self-supporting. Still another object of the invention is to provide an inductive oscillating circuit which is economical to fabricate and suitable for utlization with a printed circuit. A further object of the invention is to provide an inductive oscillating circuit which is easily aligned and occupies a minimal space.

These and other objects, advantages and capabilities are achieved in one aspect of the invention by an oscillating circuit configuration having a one-piece self-supporting conductive material of circular bent form extending about 270° with an alignable coil slug disposed therein and the conductive material having a given width, length, thickness, and diameter.

BRIEF DESCRIPTION OF THE DRAWINGS

FIG. 1 illustrates a plurality of one-piece inductors interconnected with strips;

FIG. 2 is a rectangular piece of conductor material suitable for fabrication into a one-piece inductor; and

FIG. 3 is a schematic illustration of the plurality of one-piece inductors of FIG. 1.

DESCRIPTION OF THE PREFERRED EMBODIMENT

For a better understanding of the present invention, together with other and further objects, advantages and capabilities, reference is made to the following disclosure and appended claims in conjunction with the accompanying drawings.

Referring to FIG. 1 of the drawings, one oscillating circuit configuration includes three circular inductors **1, 2,** and **3** for one UHF tuner mounted on a conductor plate bearing the rest of the circuits. Each of the circular inductors **1, 2,** and **3** has a capacity diode, **4, 5,** and **6** respectively, soldered to the "hot end" thereof and to a conductor layer **11** of a printed circuit board.

Each of the circular inductors **1, 2,** and **3** has a strip **7, 8,** and **9** respectively, extending from the "cold end" thereof and extending through a carrier material **10**

and the conductor layer **11**. Moreover, each of the strips, **7**, **8**, and **9**, is soldered to the conductor layer **11**.

Inside each one of the circular inductors **1**, **2**, and **3**, which are formed freestanding, is a threaded coil former **12**, **13**, and **14** made of an insulating material. An alterable slug **15**, **16**, and **17** of diamagnetic material, such as brass, having a permeability less than one is disposed within and affixed to each one of the threaded coil formers **12**, **13**, and **14**. Moreover, connector strips **18** and **19** interconnects the strips **7**, **8** and **8**, **9** respectively.

FIG. **2** illustrates a block of conductive material, having a width *b*, height *c*, and length l, and suitable for fabrication into one of the circular inductor, **1**, **2**, and **3**.

FIG. **3** illustrates a schematic electrical representation of the configuration of FIG. **1**. Herein, each one of the circular inductors **1**, **2** and **3** serves as an alterable inductance coupled by way of a varactor diode **4**, **5**, and **6** respectively to a potential reference level. The "hot end" of each of the inductors **1**, **2**, and **3** is coupled to a potential reference level by a capacity diode **4**, **5**, and **6** respectively. The junction of the alterable inductances **1**, **7** and **2**, **8** are interconnected by a conductor **18** serving as a mutual inductance. Moreover, the junction of the alterable inductors **2**, **8** and **3**, **9** are interconnected by a conductor **19** which also serves as a mutual inductance therebetween.

Calculations regarding the operating Q-factor have shown that the Q-factor is mainly determined by the input and output impedances. Thus discrete circuits employing transistors have been shown to be inferior to cavity resonators. However, the insertion damping factor achieved by the aligning element is still normal as there exists a large ratio. Thus:

$$\frac{Qb}{Qo}$$

where: Qb is the grade of service and Qo is equal to the quality unloaded and an insertion damping factor:

$$\frac{K}{dB} = 10 \operatorname{Log}_{10} \frac{1}{1 - \frac{}{Qo}Qb}$$

The dimensioning data for a variable oscillating circuit results from the following formulas by starting first with the formula of a C-loaded λ/4 (quarter wavelength) cavity resonator and deducing the relative length.

$$\frac{l_r}{cm} = \frac{v}{\omega_r} \cdot \arctan \frac{1}{\omega_r \cdot C \cdot Z_L} \quad \text{with } v = \frac{c}{\sqrt{\mu_r \cdot \epsilon_r}}$$

where:

Z_L = wave impedance of the cavity resonator
c = velocity of light
v = specific velocity
μ_r = relative permeability constant
ϵ_r = relative dielectric constant
cm = centimeters

A tranformation into concentric arrangements having a new inductance (L equiv) is then achieved by comparing the phase and the value.

$$\frac{L}{nH}(\text{equiv}) = \frac{Z_L}{\pi f}\left(\frac{1}{\frac{2\pi f l_r}{v} \cdot \csc^2\left(\frac{2\pi f l_r}{v}\right) + \operatorname{ctn}\left(\frac{2\pi f l_r}{v}\right)}\right) \cdot 10^9$$

The geometric dimensions of the coaxial coil are calculated from:

$$\frac{L(\text{equiv})}{n\,H} = 4\pi R\left(ln\left(\frac{8R}{b}\right) - 0.5\right)$$

for one turn and a circular coil whereby

R = average coil radius
b = width of conductor
nH = nano-Henry and finally the geometric dimension of the coupling strip results from:

$$\frac{Lo}{nH} = 21\left(ln\frac{2l}{b+c} + 0.5 + 0.22\frac{b+c}{l}\right)$$

where: b = width of the conductor 0.040 inch for example; c = thickness of the conductor 0.024 inch for example; and l = length of the conductor.

Additionally, achieving the shortest possible connections for the capacity diodes **4**, **5**, and **6** and aligning the capacity diodes **4**, **5**, and **6** conveniently horizontal to the printed circuit board, it is useful to bend the inductances **1**, **2**, and **3** insulating coil formers **12**, **13**, and **14**, and diamagnetic slug **15**, **16**, and **17** about 90° as illustrated by a dotted line **20** of FIG. **1**. Thus, the oscillating circuits are in a position substantially parallel to the printed circuit board.

While there has been shown and described what is at present considered the preferred embodiment of the invention, it will be obvious to those skilled in the art that various changes and modifications may be made therein without departing from the invention as defined by the appended claims.

What is claimed is:

1. A variable oscillating circuit arrangement for the UHF range of a transistorized UHF television tuner comprising:

an electrically conductive base plate;

at least two circular self-supporting inductors, each of one piece and less than one complete turn and having a "hot" end and a "cold" end;

an alterable slug of diamagnetic material disposed within each one of said circular self-supporting inductors;

strip means electrically and mechanically coupling said "cold" end of each one of said inductors to said base plate;

capacitive diode means coupling said "hot" end of each one of said inductors to said base plate; and

connector strip means electrically and mechanically interconnecting said two inductors to provide mechanical support and mutual inductance therebetween.

* * * * *