(19) Europäisches Patentamt
European Patent Office
Office européen des brevets

(11) **EP 2 706 624 A1**

(12) EUROPEAN PATENT APPLICATION

(43) Date of publication:
12.03.2014 Bulletin 2014/11

(21) Application number: **13182701.6**

(22) Date of filing: **02.09.2013**

(51) Int Cl.:
H01R 13/64 *(2006.01)* ***G06F 1/30*** *(2006.01)*
H02J 9/06 *(2006.01)* ***H01R 13/453*** *(2006.01)*

(84) Designated Contracting States:
AL AT BE BG CH CY CZ DE DK EE ES FI FR GB GR HR HU IE IS IT LI LT LU LV MC MK MT NL NO PL PT RO RS SE SI SK SM TR
Designated Extension States:
BA ME

(30) Priority: **05.09.2012 GB 201215804**

(71) Applicant: **Eaton Industries France SAS**
38334 Montbonnot St Martin (FR)

(72) Inventors:
- **Zanier, Francois**
  38570 Le Cheylas (FR)
- **McDowall, Gregor**
  1143 Apples (CH)

(74) Representative: **Plünnecke, Ingo**
Eaton Industries GmbH
Patent Law Department
Hein-Moeller-Straße 7-11
53315 Bonn (DE)

(54) Plug connector of an uninterruptible power supply and UPS connector arrangement

(57) Plug connector of an uninterruptible power supply (UPS), comprising a connector housing, and UPS connector arrangement, comprising at least one plug connector and at least one connector socket adapted to receive the plug connector.

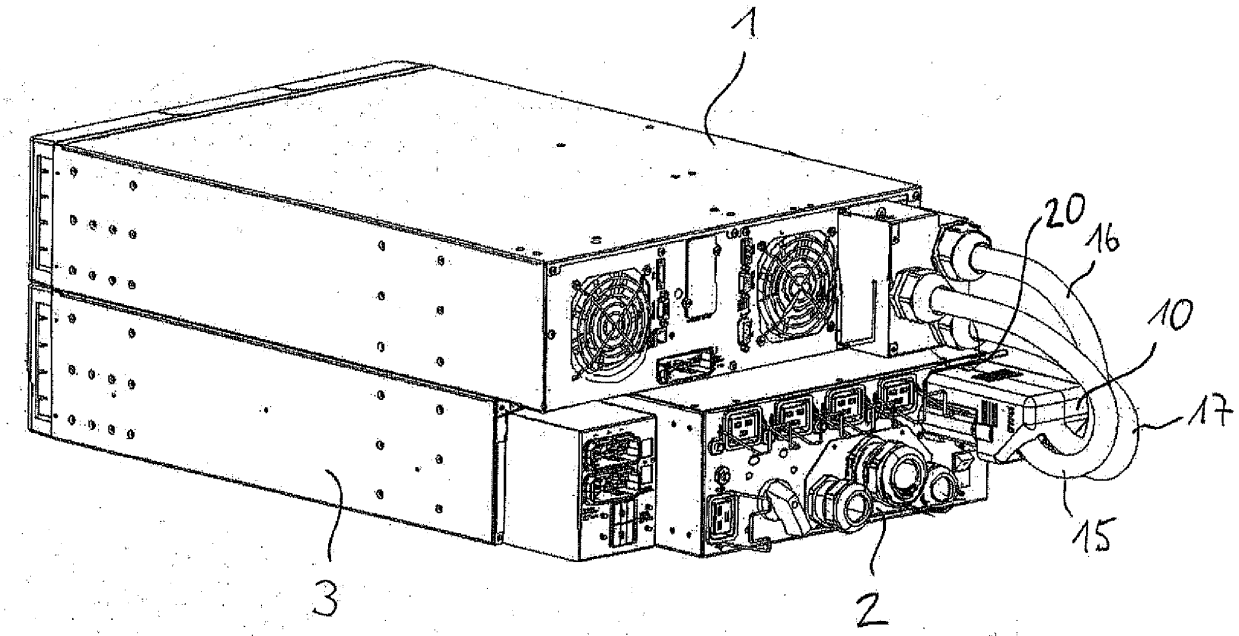

FIG. 1

EP 2 706 624 A1

Description

[0001] The present invention disclosure refers to a plug connector of an uninterruptible power supply (UPS), comprising a connector housing, and to a UPS connector arrangement, comprising at least one plug connector according and at least one connector socket adapted to receive the plug connector.

[0002] For certain kinds of load devices driven by electric power, such as computers, semiconductor manufacturing lines, or medical devices, it is not acceptable to be stopped even for a moment, because of their functional and versatile importance. Such load devices are therefore provided with an uninterruptible power supply unit (abbreviated as UPS hereafter) between the power supply and the load devices so that emergency power is supplied to the latter during a predetermined period even when the power supply fails.

[0003] Certain parts comprised in a UPS, such as a battery, a cooling fan and the like, have a shorter service life compared to other parts. For maintaining normal operation of a UPS, it is necessary to regularly or, if it is required, check and replace certain parts with new ones, or to replace the complete UPS with new one.

[0004] During maintenance, an alternate UPS is used instead of the regularly used UPS which is disconnected from the load device. After the maintenance of the regularly used UPS is completed, the alternate UPS is replaced with the regularly used UPS again. However, as described above, some kinds of load devices, such as computers can not accept any stoppage, even for a moment. Thus, it is necessary to replace a part or whole of the UPS with a new one without stoppage of power supply to the load device even when replacing it with a new one. Hence, in order to avoid such stoppage, a maintenance bypass device (MBP) is connected between the power supply and the UPS so that it continues to supply power to the load device or devices during replacing the UPS with a new one.

[0005] According to US 2010/0187908 A1, a maintenance bypass device capable of achieving safety and efficiency in replacing work of a UPS is provided. The maintenance bypass device is equipped between a power supply and a load device and in parallel with an uninterruptible power supply unit, and supplies power from the power supply to said load device when the uninterruptible power supply unit is being detached. In the maintenance bypass device, the connection portions of connecting wires connected to the uninterruptible power supply unit are disposed on a front panel disposed on the front side and are a connector type that enables the connection portions to be connected to and disconnected from the connection wires without using a tool.

[0006] It is desirable to shorten time for performing wire connections between the devices as to efficiently connect electric devices and/or disconnect them. However, regulations for operational safety have to be met as well. It is an object of this invention to provide a plug connector of an uninterruptible power supply (UPS) and a UPS connector arrangement, respectively, that meet operational safety requirements and allow for faster connection operations.

[0007] The objective is achieved by a plug connector according to claim 1 and a UPS connector arrangement comprising the plug connector. Preferred embodiments are described in the dependent claims.

[0008] The plug connector of an uninterruptible power supply comprises a connector housing. According to the invention, terminals of at least two UPS power connections and terminals of at least one UPS signal line are installed in the connector housing. This is a UPS specific connector with both signal and power built-in. As there is no way of changing the positions of the power connections or the signal line, the plug connector according to the invention allows safe connecting operations. Further, the time for connecting and disconnecting a module to the UPS via the plug connector according to the invention is shorter, as there is no need to connect the power lines and the signal lines one after another. Particularly, each UPS power connection comprises at least one phase conductor and a neutral line.

[0009] According to a preferred embodiment, the UPS power connections comprise a UPS power output, a UPS power input and a UPS bypass power input. The UPS is preferably designed for a power range of 8 kVA to 11 kVA.

[0010] An advantageously safe embodiment provides that the terminals of the UPS power output and the terminals of the at least one signal line are protected by a protective wall, the protective wall surrounding the terminals.

[0011] According to another preferred embodiment of the plug connector, the terminals of the UPS power input and the UPS power input bypass are protected by a slidable shroud. The slidable shroud is preferably resiliently loaded towards a protective position. More preferable, the slidable shroud is loaded towards a protective position by two coil springs. Furthermore it is preferred, that the slidable shroud is detachably arrested in a protective position by a clip. It is an advantage that the slidable shroud covers the terminals, so an operator cannot get into contact with the terminals. To unlock the slidable shroud, the clip has to be manipulated which provides a two-hand operation to increase safety when connecting the UPS to a device module.

[0012] According to yet another preferred embodiment of the plug connector, the connector housing is substantially comprised of two half shells, the two half shells forming an opening at a rear part of the connector housing, which is arranged opposite to the side from which the terminals extend, the opening being adapted for an insertion of the cables of the UPS power connections and the signal line. The rear part of the connector housing is preferably completed by a central portion substantially closing the opening and thus forming a plurality of smaller collets, one for each of the UPS power connections and for the UPS signal line. The rear part of the connector

housing is preferably inclined by 45 degree to advantageously avoid bending of the UPS power connections and the signal line. The connector housing preferably comprises at least one unloosable screw to fix the connector housing to a connector socket.

[0013] Preferably, the connector housing is adapted to be connected to a connector socket of a maintenance bypass module. According to yet another preferred embodiment of the plug connector, an unloosable screw is arranged on the connector housing for securing the connection to the connector socket.

[0014] A further object of the invention, that achieves the objective, is a UPS connector arrangement, comprising at least one plug connector according to the invention and at least one connector socket adapted to receive the plug connector.

[0015] A preferred embodiment of the UPS connector arrangement comprises three power connection cables and one signal line cable, at least the power connection cables being connected to the UPS by hard wiring.

[0016] According to another preferred embodiment of the UPS connector arrangement, the connector socket comprises socket terminals for contacting the plug terminals, wherein the connector socket comprises a socket protective wall for shielding the socket terminals. Preferably, the socket wall is adapted to push back the slidable shroud of the plug connector, after the shroud has been released by manipulating the clip. Furthermore preferred, the connector socket comprises a recess to accommodate the protective wall extending from the connector housing. Yet furthermore preferred, the connector socket comprises inner protective walls dividing the socket terminals into groups.

[0017] According to yet another preferred embodiment of the UPS connector arrangement, the connector socket comprises at least one screwed coupling for at least one screw of the connector plug to provide a mechanical link.

[0018] According to yet another preferred embodiment of the UPS connector arrangement, the connector socket comprises a pivotably supported door, which is biased towards a closed position by torsion springs, wherein the socket terminals are covered by the cover lid in the closed position.

[0019] The invention will further be described with respect to the embodiment shown in the drawing sheets.

[0020] In the Figures:

Fig. 1 shows an uninterruptible power supply connected to a maintenance bypass device by a UPS connector arrangement according to an embodiment of the invention;

Fig. 2 depicts the UPS connector arrangement of Fig. 1 in a disconnected state, illustrating an embodiment of the plug connector according to the invention and a connector socket in detail.

Fig. 3 shows a front view of the plug connector of Fig. 2;

Fig. 4 shows the plug connector of Fig. 2 in a perspective view with the connector housing parts separated;

Fig. 5 shows a front view of the connector socket of Fig. 2;

Fig. 6 - 8 show a connector arrangement in different views.

[0021] In Fig. 1, an uninterruptible power supply 1 for a power range of 8 to 11 kVA is illustrated in a perspective view, seen from the rear part of the UPS 1. Attached to the rear wall of a extended battery module 3, there is a maintenance bypass module 2, which is a device that allows the UPS 1 or an internal battery of the UPS 1 to be removed from a system (not shown), while still providing uninterruptible power to a load (not shown). The maintenance bypass module 2 is an advantageous supplement for the UPS 1. If maintenance needs to be performed on the system, the UPS 1 can be easily removed without requiring the load to be shut off. This is critical for any loads that cannot be interrupted.

[0022] The UPS 1 comprises three UPS power connections 15, 16, 17 and a UPS signal line (12, cf. Fig. 2), which are connected to the maintenance bypass device 2, coupled by a UPS connector arrangement according to an embodiment of the invention. The UPS connector arrangement comprises a plug connector 10 with a connector housing, which is described in more detail with respect to Fig. 2.

[0023] In Fig. 2, the plug connector 10 and the connector socket 20 are shown in a disconnected state and in greater scale. As can be seen in Fig. 2, the terminals of the three UPS power connections 15, 16, 17 and terminals of the UPS signal line 12 are installed in the connector housing 14. Each UPS power connection 15, 16, 17 comprises at least one phase conductor and a neutral line. In the embodiment shown, the UPS power connections are a UPS power output 15, a UPS power input 16 and a UPS bypass power input 17. Further, the UPS connector arrangement comprises a connector socket 20 adapted to receive the plug connector 10, which connector socket 20 is mounted in a housing of the maintenance bypass unit 2. The plug connector 10 is described in more detail with respect to the following Fig. 3 and 4. The connector socket 20 is described in more detail with respect to Fig. 5 later.

[0024] Fig. 3 shows a front view of the plug connector 10, with four terminals 112 of the UPS signal line and two female bullet terminals 113 of the UPS power output 15 being protected by a protective wall 18. Four male bullet terminals 114 of the UPS power input 16, arranged in a middle row, two male bullets 115 of the UPS bypass power input 17, and one long male bullet terminal 116, which serves as a common ground for the UPS power connec-

tions, are protected by a slidable shroud 30, which is arrested in a closed position. The slidable shroud is unlocked by operating a clip 32. The signal line 12 comprises a signal cable with a known connector, like for example, an RJ11 connector (not shown), which is plugged to the UPS 1 via a female RJ11 connector on the UPS rear panel (Fig. 1). This permits the signal information exchange between maintenance bypass module 2 and UPS 1, to give to UPS 1 the information of maintenance bypass module 2 detection, and a detection about the mode of the maintenance bypass module 2, i.e. normal operation or bypass operation. The two female bullet terminals 113 provide one phase and one neural line of the UPS power output 15, the four male bullet terminals 114 provide three phases and one neutral line of the UPS power input 16 and the two male bullets 115 in the bottom row provide one phase and one neutral line of the UPS bypass power input 17. The common ground male bullet terminal 116 is longer than the rest of the male bullet terminals, which ensures that the ground line is connected first.

[0025] In Fig. 4, the connector housing 14 is depicted with two half shells 33 of the housing disassembled. The two half shells 33, form an opening at a rear part of the connector housing 14, which is arranged opposite to the side from which the terminals extend, the opening being adapted for an insertion of the cables of the UPS power connections (15, 16, 17, Fig. 2) and of the signal line (12, Fig. 2). The rear part of the connector housing 14 is completed by a central portion 35 substantially closing the opening and thus forming a plurality of smaller collets 36, one for each of the UPS power connections and for the UPS signal line. The slidable shroud 30 is guided in the connector housing 14 and it is loaded towards a protective position by two coil springs 31. The connector housing 14 further comprises an unloosable screw 19 to fix the connector housing 14 to a connector socket (20, Fig. 5) of a maintenance bypass module (2, Fig. 1).

[0026] The UPS connector arrangement according to the embodiment comprises the plug connector 10 and the connector socket 20 adapted to receive the plug connector, which is now described with respect to Fig. 5. The connector socket 20 comprises socket terminals 21 for contacting the plug terminals (112 - 116) and it comprises a socket protective wall 22 shielding the socket terminals 21. A recess 27 is provided to accommodate the protective wall 18 extending from the connector housing 14. The socket protective wall 22 is adapted to push back the slidable shroud 30 of the plug connector 10. The connector socket 20 further comprises a pivotably supported door 23, which is biased towards a closed position by torsion springs (24). The connector socket 20 comprises at least one screwed coupling 29 for at least one screw 19 of the connector plug 10 to provide a mechanical link.

[0027] The protective walls 18, 22 and the slidable shroud 30 advantageously prevent that an operator's finger gets into contact with one of the terminals. The Fig. 6 - 8 show another UPS connector arrangement, comprising a plug A and a connector socket B. The connector arrangement of Fig. 6 - 8 is intended to illustrate the properties of protective walls and is not an embodiment according to the invention. The protective walls are provided in the form of specific ribs C to comply with safety rules, and in particular the safety pin tool test, wherein direct electrical contact has to be avoided between a safety pin tool (not shown) and the internal electrical terminals of the connector (IEC 60-950 standard).

Reference Numerals

[0028]

1	Uninterruptible power supply, UPS
2	Maintenance bypass module
3	External battery module
10	Plug connector
112 - 116	Terminals
12	UPS signal line
14	Connector housing
15	UPS power connection, UPS power output
16	UPS power connection, UPS power input
17	UPS power connection, UPS bypass power input
18	Protective wall
19	Unloosable screws
20	Connector socket
21	Socket terminals
22	Connector protective wall
23	Door
24	Torsion springs
27	Recess
29	Screwed couplings
30	Slidable shroud
31	Coil springs
32	Clip
33	Half shells
35	Central portion
36	Collets
A	Plug
B	Socket
C	Ribs

Claims

1. Plug connector (10) of an uninterruptible power supply (1), with a connector housing (14), **characterised in that** terminals (11) of at least two UPS power connections (15, 16, 17) and terminals of at least one UPS signal line (12) are installed in the connector housing.

2. Plug connector according to claim 1, **characterised in that** each UPS power connection (15, 16, 17) comprises at least one phase conductor and a neutral line.

3. Plug connector according to claim 1, **characterised in that** the UPS power connections comprise a UPS power output (15), a UPS power input (16) and a UPS bypass power input (17).

4. Plug connector according to any one of the preceding claims, **characterised in that** the terminals of the UPS power output (15) and the terminals of the at least one signal line (12) are protected by a protective wall (18).

5. Plug connector according to any one of the preceding claims, **characterised in that** the terminals of the UPS bypass power input (17) and of the UPS power input (16) are protected by a slidable shroud (30).

6. Plug connector according to claim 5, **characterised in that** the slidable shroud (30) is resiliently loaded towards a protective position.

7. Plug connector according to any one of claims 5 or 6, **characterised in that** the slidable shroud (30) is loaded towards a protective position by two coil springs (31).

8. Plug connector according to any one of claims 5 to 7, **characterised in that** the slidable shroud (30) is detachably arrested in a protective position by a clip (32).

9. Plug connector according to any one of the preceding claims, **characterised in that** the connector housing (14) is substantially comprised of two half shells (33), the two half shells forming an opening at a rear part of the connector housing, which is arranged opposite to the side from which the terminals extend, the opening being adapted for an insertion of the cables of the UPS power connections (15, 16, 17) and of the signal line (12).

10. Plug connector according to claim 9, **characterised in that** the rear part of the connector housing (14) is completed by a central portion (35) substantially closing the opening and thus forming a plurality of smaller collets (36), one for each of the UPS power connections (15, 16, 17) and for the UPS signal line (12).

11. Plug connector according to any one of the preceding claims, **characterised in that** the connector housing (14) is adapted to be connected to a connector socket (20) of a maintenance bypass module (2), wherein an unloosable screw is arranged on the connector housing for securing the connection to the connector socket.

12. UPS connector arrangement, comprising at least one plug connector (10) according to any one of the preceding claims and at least one connector socket (20) adapted to receive the plug connector.

13. UPS connector arrangement according to claim 12, **characterised in that** the connector socket (20) comprises socket terminals for contacting the plug terminals, wherein the connector socket comprises a socket protective wall (22) shielding the socket terminals.

14. UPS connector arrangement according to any one of claims 12 or 13, **characterised in that** the socket protective wall (22) is adapted to push back the slidable shroud (30) of the plug connector (10).

15. UPS connector arrangement according to any one of claims 12 to 14, **characterised in that** the connector socket (20) comprises a pivotably supported door (23), which is biased towards a closed position by torsion springs (24).

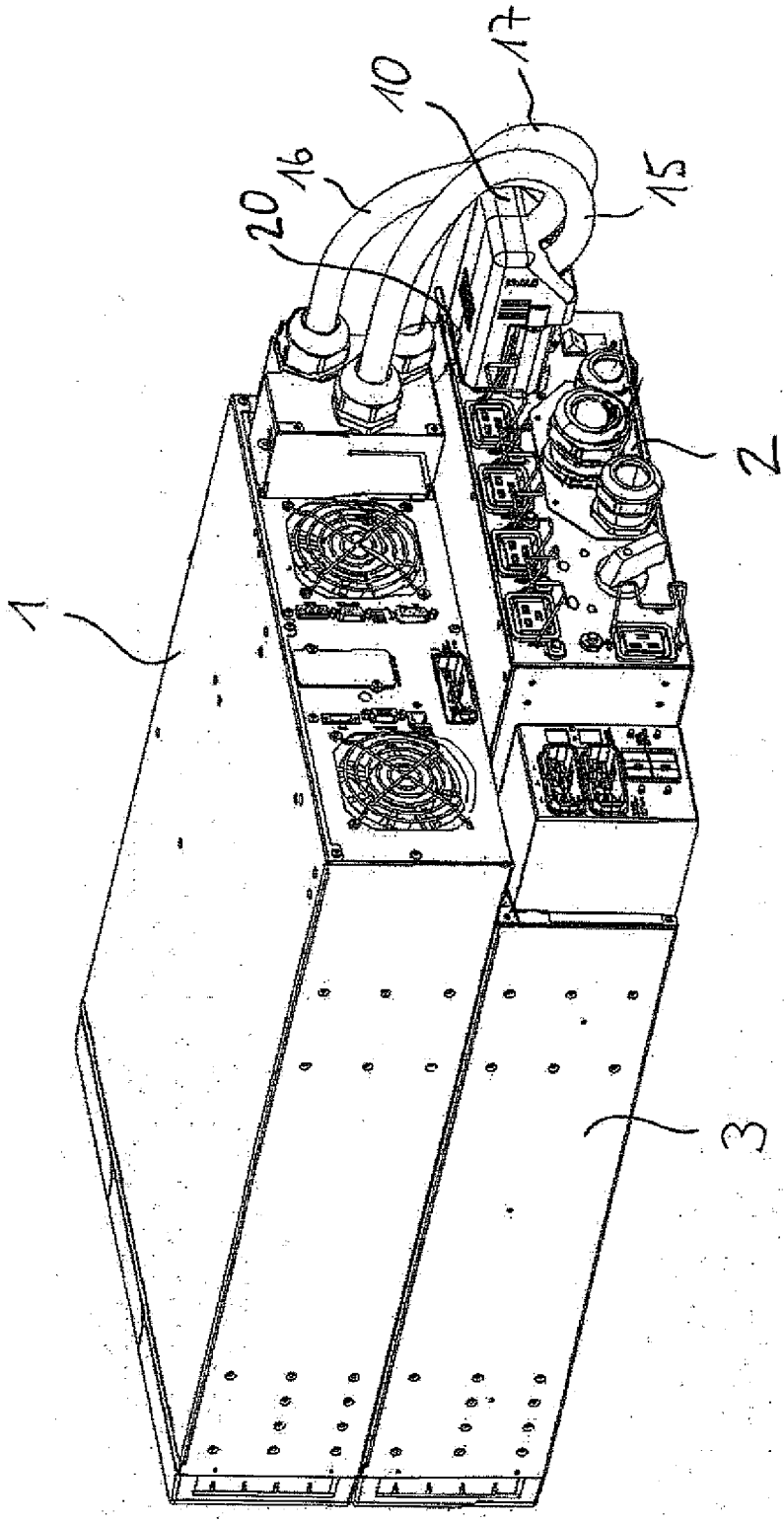

FIG. 1

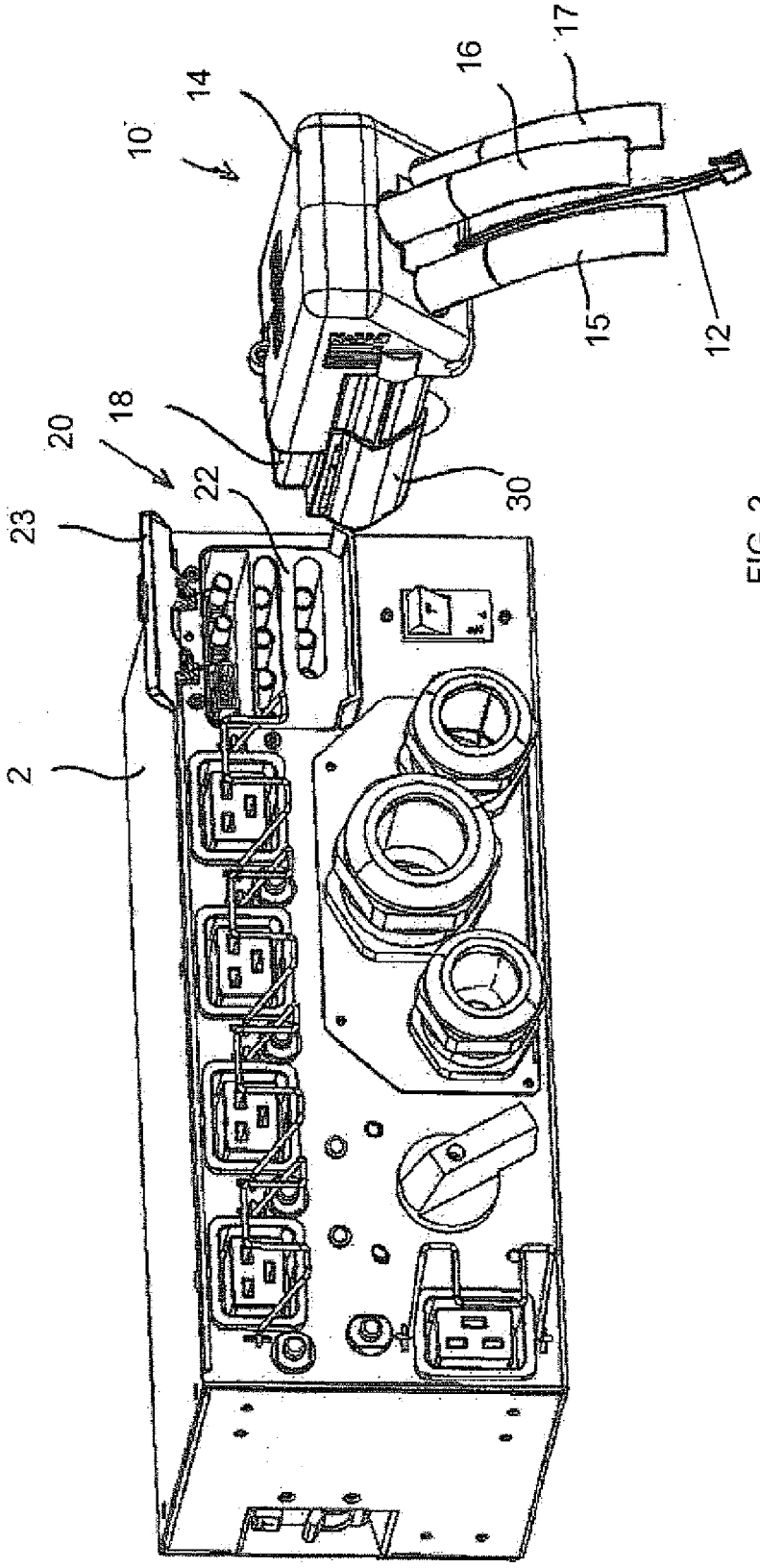

FIG. 2

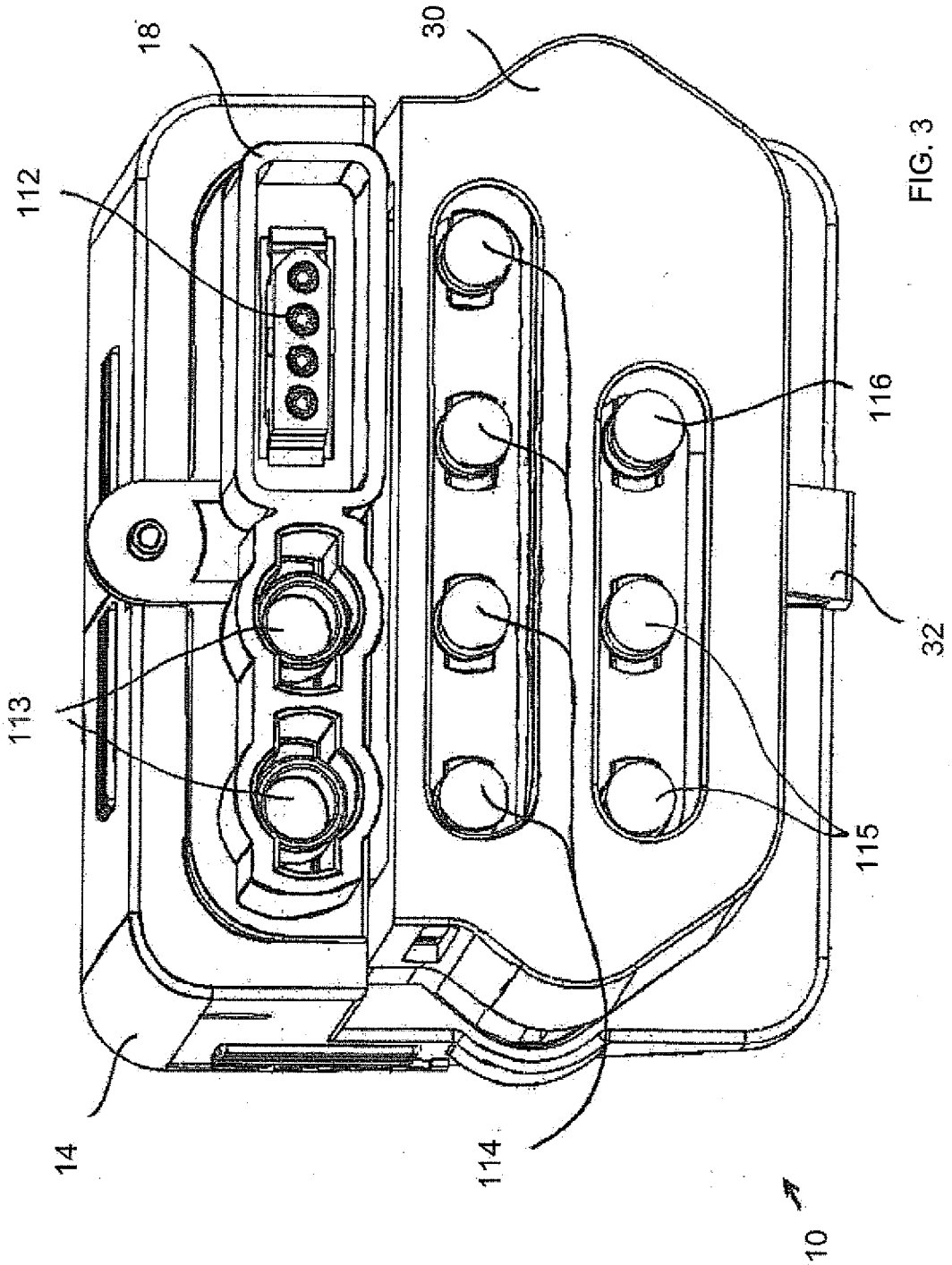

FIG. 3

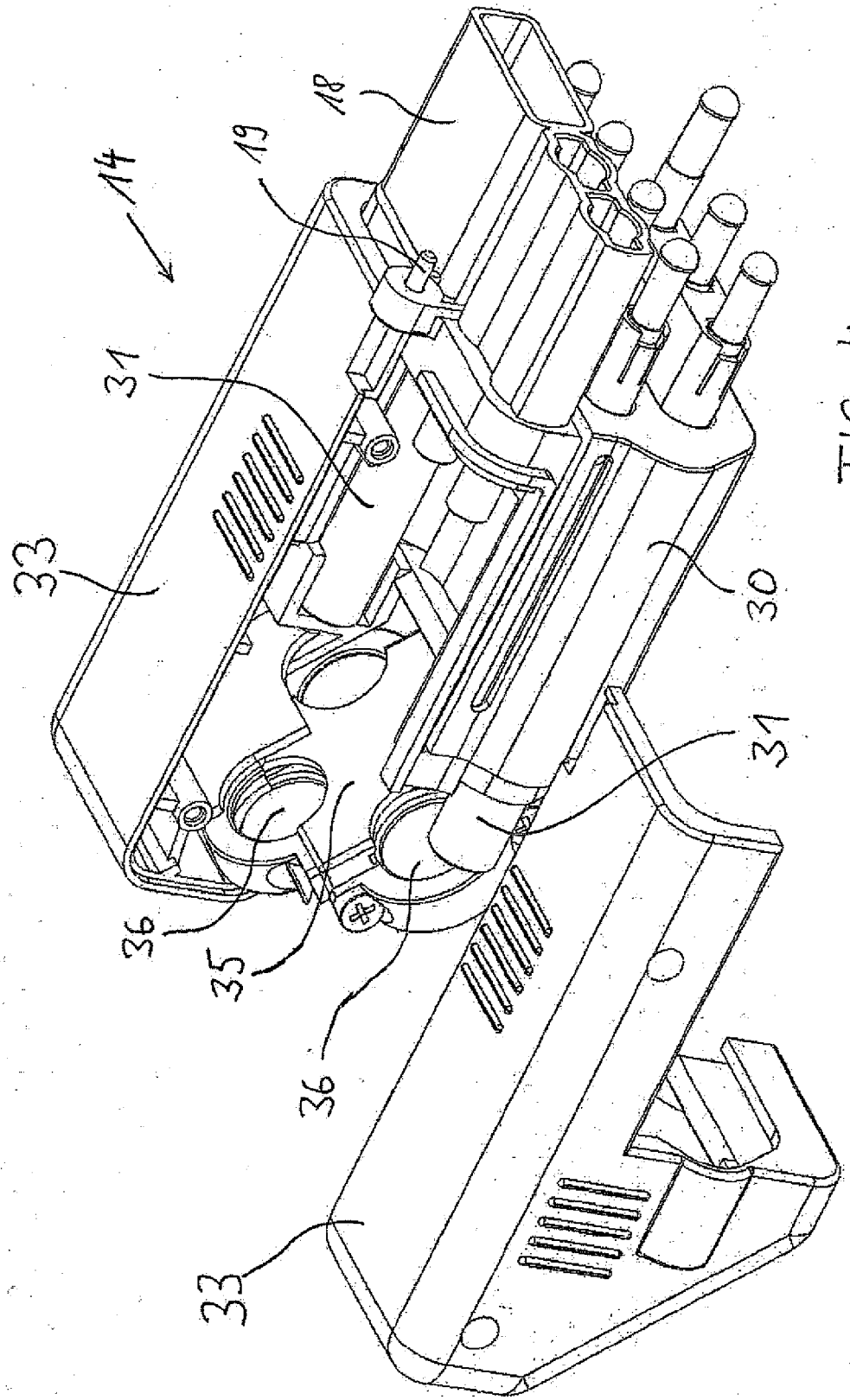

FIG. 4

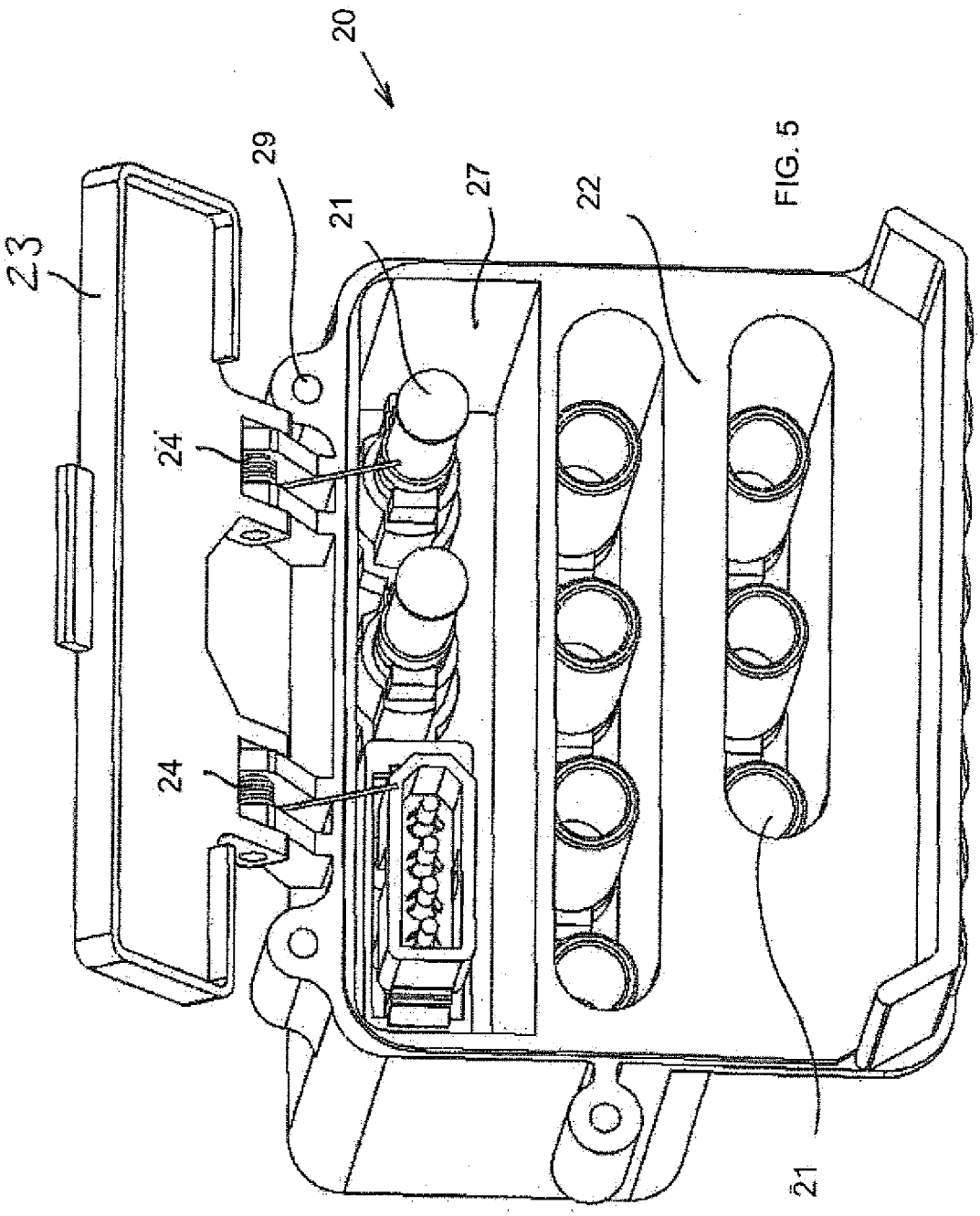

FIG. 5

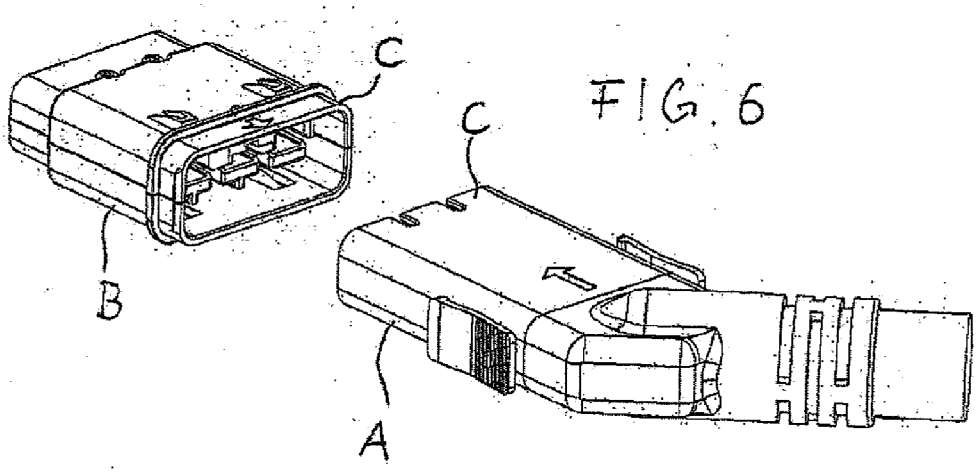

FIG. 6

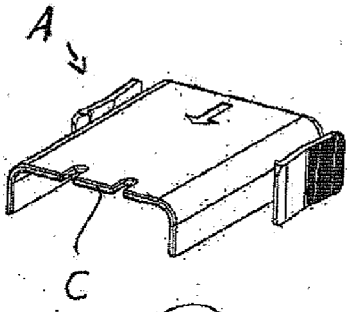

FIG. 7

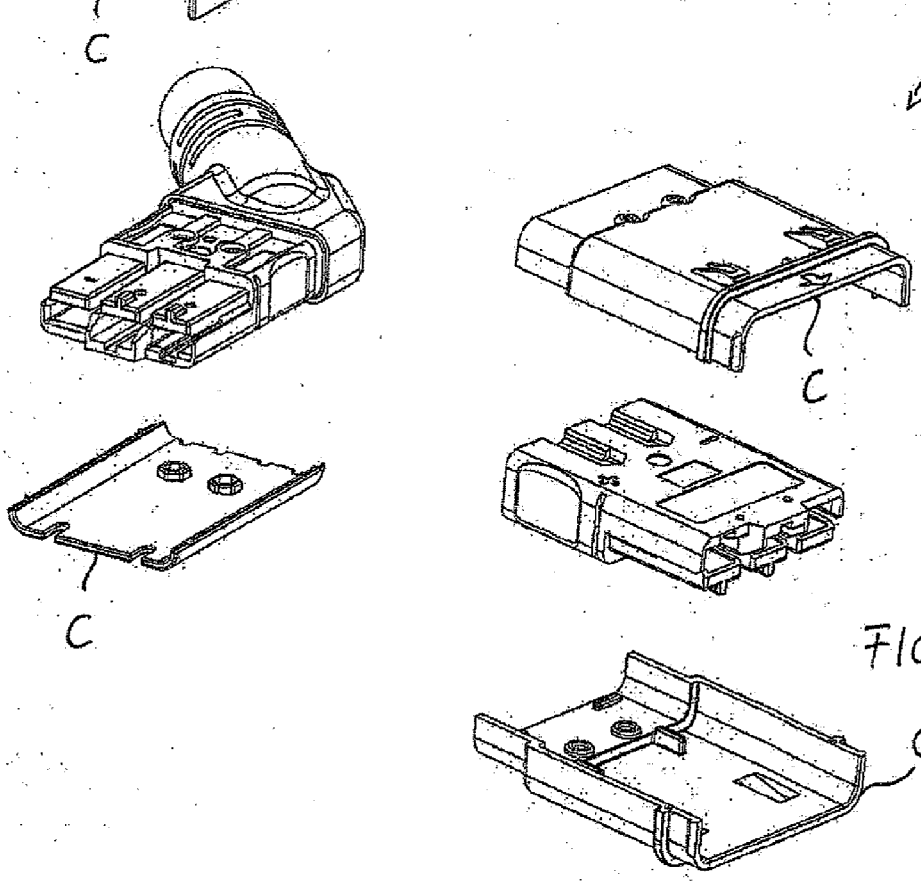

FIG. 8

Europäisches Patentamt
European Patent Office
Office européen des brevets

EUROPEAN SEARCH REPORT

Application Number
EP 13 18 2701

DOCUMENTS CONSIDERED TO BE RELEVANT

Category	Citation of document with indication, where appropriate, of relevant passages	Relevant to claim	CLASSIFICATION OF THE APPLICATION (IPC)
X Y	US 2010/093223 A1 (PAPPAS ALEXANDER N [US] ET AL) 15 April 2010 (2010-04-15) * paragraph [0059] - paragraph [0066] * * figures 7A-7C * -----	1,2,4,12 5,6,9-11	INV. H01R13/64 G06F1/30 H02J9/06 H01R13/453
Y	US 5 259 052 A (BRIGGS ROBERT C [US] ET AL) 2 November 1993 (1993-11-02) * column 5, line 43 - line 60 * * figures 1-5 * -----	5,6	
A	US 5 599 196 A (POWELL PATTI J [US] ET AL) 4 February 1997 (1997-02-04) * the whole document * -----	7	
Y	WO 2010/030616 A1 (MOLEX INC [US]; REED BRUCE [US]; LANG HAROLD KEITH [US]; NEER JAY [US]) 18 March 2010 (2010-03-18) * figure 18 * -----	9,10	
Y	US 2010/187908 A1 (OKANO KOUJI [JP] ET AL) 29 July 2010 (2010-07-29) * the whole document * -----	11	

TECHNICAL FIELDS SEARCHED (IPC)

H01R
G06F
H02J

The present search report has been drawn up for all claims

Place of search	Date of completion of the search	Examiner
The Hague	22 November 2013	Henrich, Jean-Pascal

CATEGORY OF CITED DOCUMENTS

X : particularly relevant if taken alone
Y : particularly relevant if combined with another document of the same category
A : technological background
O : non-written disclosure
P : intermediate document

T : theory or principle underlying the invention
E : earlier patent document, but published on, or after the filing date
D : document cited in the application
L : document cited for other reasons

& : member of the same patent family, corresponding document

1

EPO FORM 1503 03.82 (P04C01)

ANNEX TO THE EUROPEAN SEARCH REPORT ON EUROPEAN PATENT APPLICATION NO. EP 13 18 2701

This annex lists the patent family members relating to the patent documents cited in the above-mentioned European search report. The members are as contained in the European Patent Office EDP file on
The European Patent Office is in no way liable for these particulars which are merely given for the purpose of information.

22-11-2013

Patent document cited in search report	Publication date	Patent family member(s)	Publication date
US 2010093223 A1	15-04-2010	NONE	
US 5259052 A	02-11-1993	NONE	
US 5599196 A	04-02-1997	NONE	
WO 2010030616 A1	18-03-2010	CN 102177616 A	07-09-2011
		CN 102197540 A	21-09-2011
		CN 102204017 A	28-09-2011
		CN 102204018 A	28-09-2011
		CN 102204026 A	28-09-2011
		CN 102210062 A	05-10-2011
		CN 102210064 A	05-10-2011
		CN 102210065 A	05-10-2011
		CN 103001065 A	27-03-2013
		CN 201562801 U	25-08-2010
		CN 201562814 U	25-08-2010
		CN 201562815 U	25-08-2010
		CN 201562825 U	25-08-2010
		CN 201562831 U	25-08-2010
		CN 201562834 U	25-08-2010
		CN 201562835 U	25-08-2010
		CN 201584563 U	15-09-2010
		CN 201838836 U	18-05-2011
		CN 201845897 U	25-05-2011
		JP 5044721 B2	10-10-2012
		JP 5266390 B2	21-08-2013
		JP 5290421 B2	18-09-2013
		JP 2012502435 A	26-01-2012
		JP 2012502436 A	26-01-2012
		JP 2012502437 A	26-01-2012
		JP 2012502438 A	26-01-2012
		JP 2013058497 A	28-03-2013
		JP 2013122922 A	20-06-2013
		TW M395940 U	01-01-2011
		TW M399472 U	01-03-2011
		TW M399495 U	01-03-2011
		US 2011212633 A1	01-09-2011
		US 2011212643 A1	01-09-2011
		US 2011223805 A1	15-09-2011
		US 2011223809 A1	15-09-2011
		US 2011223810 A1	15-09-2011
		US 2011230104 A1	22-09-2011
		US 2011256776 A1	20-10-2011
		US 2011269338 A1	03-11-2011
		US 2011294347 A1	01-12-2011

EPO FORM P0459

For more details about this annex : see Official Journal of the European Patent Office, No. 12/82

ANNEX TO THE EUROPEAN SEARCH REPORT ON EUROPEAN PATENT APPLICATION NO. EP 13 18 2701

This annex lists the patent family members relating to the patent documents cited in the above-mentioned European search report. The members are as contained in the European Patent Office EDP file on
The European Patent Office is in no way liable for these particulars which are merely given for the purpose of information.

22-11-2013

Patent document cited in search report	Publication date	Patent family member(s)	Publication date
		US 2012214327 A1	23-08-2012
		US 2012264325 A1	18-10-2012
		US 2013005173 A1	03-01-2013
		US 2013072062 A1	21-03-2013
		US 2013157512 A1	20-06-2013
		US 2013189876 A1	25-07-2013
		WO 2010030615 A2	18-03-2010
		WO 2010030616 A1	18-03-2010
		WO 2010030618 A2	18-03-2010
		WO 2010030619 A2	18-03-2010
		WO 2010030620 A2	18-03-2010
		WO 2010030622 A1	18-03-2010
		WO 2010030631 A1	18-03-2010
		WO 2010030635 A1	18-03-2010
		WO 2010030638 A1	18-03-2010
US 2010187908 A1	29-07-2010	CN 101682213 A	24-03-2010
		JP 5176407 B2	03-04-2013
		JP 2009005488 A	08-01-2009
		TW 200901854 A	01-01-2009
		US 2010187908 A1	29-07-2010
		WO 2008155968 A1	24-12-2008

EPO FORM P0459

For more details about this annex : see Official Journal of the European Patent Office, No. 12/82

REFERENCES CITED IN THE DESCRIPTION

This list of references cited by the applicant is for the reader's convenience only. It does not form part of the European patent document. Even though great care has been taken in compiling the references, errors or omissions cannot be excluded and the EPO disclaims all liability in this regard.

Patent documents cited in the description

- US 20100187908 A1 **[0005]**