Feb. 17. 1925.

1,527,134

R. HEDRICK

ADDRESSING STAMP

Filed July 27, 1923

2 Sheets-Sheet 1

Fig. 1.

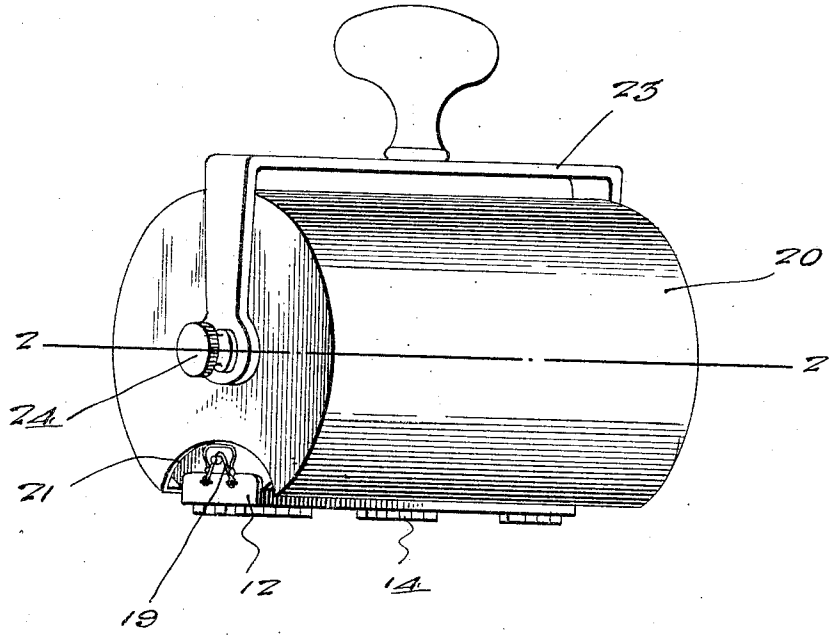

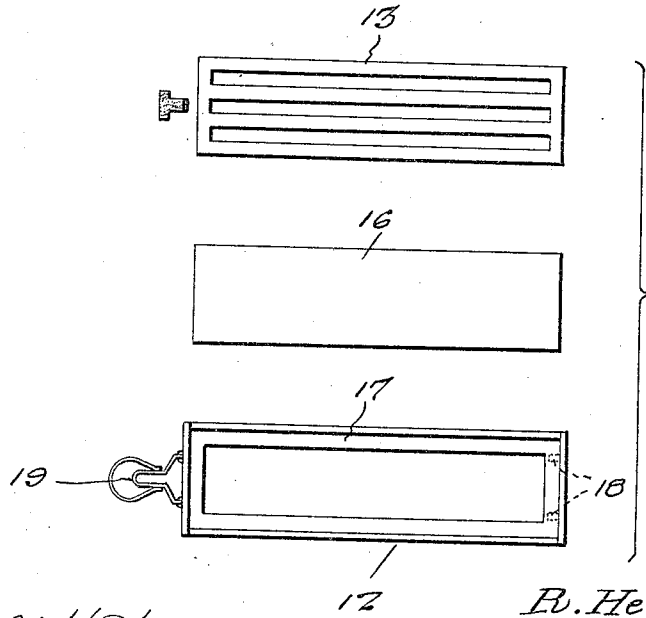

Fig. 5

Paul M. Hunt

WITNESS:

R. Hedrick INVENTOR

BY Victor J. Evans

ATTORNEY

Feb. 17. 1925.

1,527,134

R. HEDRICK

ADDRESSING STAMP

Filed July 27, 1923

2 Sheets-Sheet 2

Fig. 2.

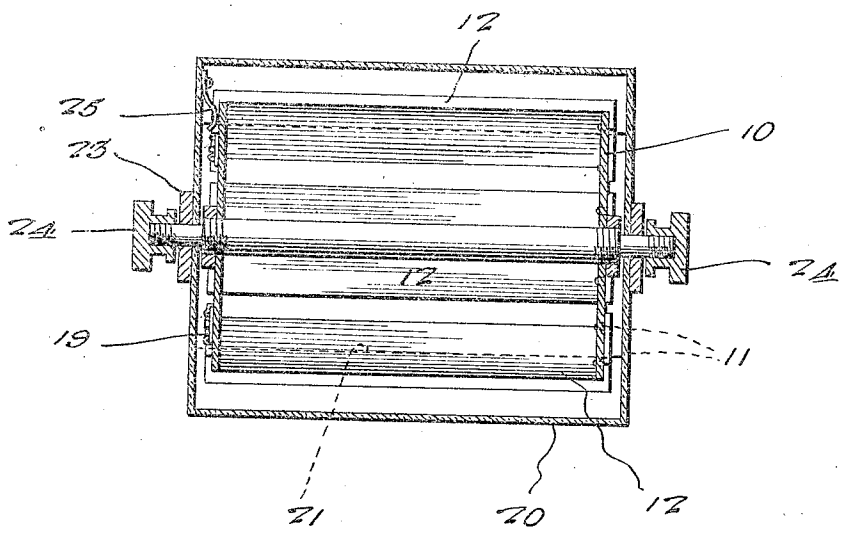

Fig. 3.

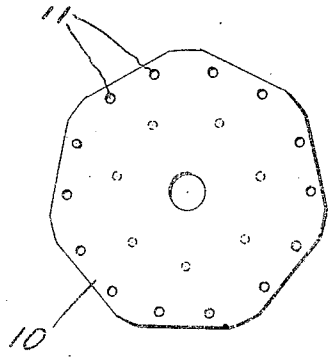

Fig. 4.

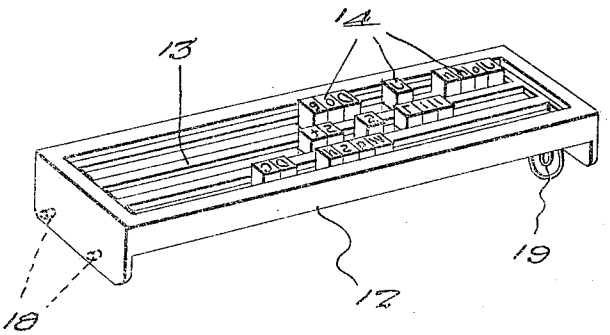

Paul M. Hunt

WITNESS:

R. Hedrick INVENTOR

BY Victor J. Evans

ATTORNEY

Patented Feb. 17, 1925. 1,527,134

UNITED STATES PATENT OFFICE.

ROY HEDRICK, OF OTTAWA, ILLINOIS.

ADDRESSING STAMP.

Application filed July 27, 1923. Serial No. 654,220.

To all whom it may concern:

Be it known that I, ROY HEDRICK, a citizen of the United States, residing at Ottawa, in the county of La Salle and State of Illinois, have invented new and useful Improvements in Addressing Stamps, of which the following is a specification.

This invention relates to addressing machines, and embodies amongst other features, a drum mounted for rotation within a suitable casing having an opening, through which any one of a plurality of stamps may be presented for use, which stamps are carried by the drum, the device being simple in construction and convenient to manipulate for the purpose intended.

Another object of the invention resides in providing a drum with a plurality of stamps, and means whereby the drum can be fixed relative to the casing in any given position depending of course upon the particular stamp being used, each stamp including a plurality of removable letters so that the name and address stamp can be changed from time to time.

The nature and advantages of the invention will be better understood when the following detailed description is read in connection with the accompanying drawings, the invention residing in the construction, combination and arrangement of parts as claimed.

In the drawings forming part of this application, like numerals of reference indicate similar parts in the several views, and wherein:

Figure 1 is a perspective view.

Figure 2 is a sectional view taken on the line 2—2 of Figure 1.

Figure 3 is a detail view of the drum.

Figure 4 is a view of one of the stamps removed from the drum.

Figure 5 is a view showing the separate parts of one of the stamps.

Referring to the drawings in detail 10 indicates a drum which may vary in size, and which is constructed from any suitable material without departing from the spirit of the invention, the end walls of the drum being provided with openings arranged in pairs, each pair of openings being indicated at 11. The drum supports a circumferential series of stamps, each including a frame like member 12 having a slotted wall or plate 13, the slots of which accommodate removable type 14 so that the name and address of any particular stamp can be changed from time to time as the occasion may require. The outer bottom plate 16 assists in holding the type 14 in position for use. It will also be noted that the frame is provided with a flange 17 against which the slotted plate 13 rests. The end walls of the frame are provided with lugs 18, there being two of such lugs for each pair of openings 11 in the end walls of the drum 10, and these lugs are held in position by wire loops 19 in the manner illustrated.

The drum is mounted for rotation within a cylindrical casing 20, the bottom portion of the casing being cut away as at 21, the cut away portion being of a size to allow a single stamp to be presented for use. The casing is provided with a handle in the form of a yoke indicated at 23, while one end of the drum is provided with a knob or the like 24 through the instrumentality of which the drum is rotated to bring any particular stamp above the cutaway portion of the casing. Carried by one end wall of the casing is a resilient element 25, designed to bear against the adjacent end of the drum for the purpose of holding the drum fixed with relation to the casing in any given position.

While it is believed that from the foregoing description, the nature and advantages of the invention will be readily apparent, I desire to have it understood that I do not limit myself to what is herein shown and described and that such changes may be resorted to when desired as fall within the scope of what is claimed.

Having thus described the invention, I claim:

1. A device of the class described comprising a cylindrical casing having a slot across the bottom thereof, a handle for said casing, a drum mounted for rotation within the casing, a plurality of detachable stamps carried by the drum, each stamp including a frame like member, spaced parallel plates, one of said plates having longitudinal slots, type removably arranged in said slots, and means for rotating said drum whereby any particular stamp can be arranged above the slot for use.

2. A hand stamp including a casing hav-

ing an opening at the bottom thereof, a drum rotatably supported by the casing and having its end walls provided with pairs of openings, a plurality of type carrying frames associated with the drum and each of the frames being provided with a pair of lugs received in the openings, laterally extending pins carried by the opposite end wall of the drum, and a loop carried by the adjacent end of each of the frames and engaging the lugs.

In testimony whereof I affix my signature.

ROY HEDRICK.