G. W. JACQUES.

FASTENER FEED MECHANISM.

APPLICATION FILED NOV. 29, 1918.

1,434,704.

Patented Nov. 7, 1922.

Fig. 3.

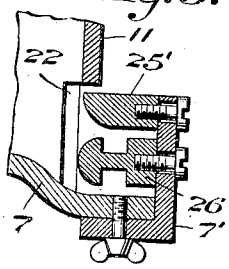

Fig. 1.

Fig. 2.

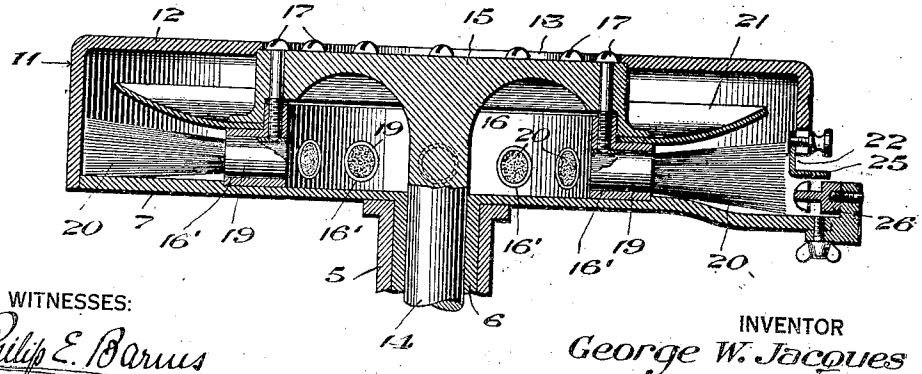

WITNESSES:

Philip E. Barnes

INVENTOR

George W. Jacques

BY Henry J. Miller

ATTORNEY

Patented Nov. 7, 1922. 1,434,704

UNITED STATES PATENT OFFICE.

GEORGE W. JACQUES, OF STRATFORD, CONNECTICUT, ASSIGNOR TO THE SINGER MANUFACTURING COMPANY, A CORPORATION OF NEW JERSEY.

FASTENER-FEED MECHANISM.

Application filed November 29, 1918. Serial No. 264,514.

To all whom it may concern:

Be it known that I, GEORGE W. JACQUES, a citizen of the United States, residing at Stratford, in the county of Fairfield and State of Connecticut, have invented certain new and useful Improvements in Fastener-Feed Mechanism, of which the following is a specification, reference being had therein to the accompanying drawings.

This invention relates to hoppers for feeding individual objects from a mass in a predetermined position to other mechanism, and the embodiment herein shown and described is more particularly designed for use in an eyelet setting machine to feed eyelets to the setting mechanism. In hoppers heretofore constructed for this purpose much difficulty has been experienced in maintaining a free flow of eyelets. Rotary agitating means are usually employed to shake the contents of the hopper about so that some of the fasteners may be presented one after another in the proper position to pass out of the hopper and down a raceway to the setting mechanism. As commonly constructed, the agitating elements are forced to sweep through a considerable body of fasteners which so impedes motion of the individual fastener as to hinder its proper positioning for exit. Considerable waste of power is also occasioned by agitation of a needlessly large body of fasteners at one time, and the fasteners are often jammed in the exit opening, thus preventing feeding, and are rubbed or injured.

This invention seeks to overcome the difficulties above mentioned by providing a hopper wherein a relatively small number of fasteners will be agitated within a space large enough to insure relatively free movement for each fastener and whereby the fastener will be gently forced out into the raceway without danger of jamming, as it becomes properly positioned relative thereto. For this purpose a rotating upwardly dished baffle member is arranged to receive fasteners from a supply reservoir, this plate serving to retard the flow to the agitator, but being so constructed and arranged as to feed fasteners at a rate which can readily be handled.

It further provides means whereby the agitating elements are held firmly in place during the operation of the machine but may be readily and individually removed for replacement, repair or other purposes, such means also serving to retain the baffle plate in position.

It further provides a reservoir adapted to supply the hopper with fasteners and means by which the reservoir is supported in supplying position, but which allows it to be readily removed to be refilled.

Further advantages and novel details of construction will be apparent from a further description of the embodiment of the invention shown in the accompanying drawings, though it is evident that it might be embodied in other forms and for other uses than in eyelet setting machines without departing from the spirit or scope thereof.

In the drawings:

Fig. 1 represents an elevation of the hopper and reservoir as supported on the machine, certain parts being broken away, and

Fig. 2 represents a section along the diameter of the hopper, parts being broken away.

Fig. 3 is a detail of a modification.

1 indicates a bracket mounted as by means of bolts 2 and 3 on a suitable supporting member 4 carried by the frame of the machine to which the mechanism is to be applied. The bracket 1 is provided with an outwardly extending arm having at its outer extremity a bearing 5 within which is mounted a sleeve member 6. Integrally or otherwise connected to said sleeve member is a base plate 7, such base plate forming the floor of the fastener containing hopper. Mounted upon said base plate 7 in any suitable manner as by means of brackets 8, screws 9 and wing nuts 10, is a cylindrical hopper casing 11, said casing being formed at its upper end with a head or cover 12 provided with an enlarged opening 13. Within the sleeve 6 is a rotatable shaft 14 which may be constantly driven from any convenient source of power.

Shaft 14 carries at its upper end, preferably integral therewith, a head 15, adapted to project within the opening 13 of cover 12 and to find a bearing therein. Head 15 forms one portion of a two-part drum-like member, the other portion being formed by a ring 16, fastened to head 15 by means of screws 17. Ring 16 is provided at intervals with radial transverse openings 16′ adapted

to receive ferrules 19 of agitator brushes 20. Ferrules 19 are held in place in the ring member 16 by screws 17 which fasten the ring 16 to the head 15, and whose lower ends project into suitable openings in the ferrules as shown in Fig. 2.

An upwardly dished baffle plate 21 is held between ring 16 and head 15 and is clamped therebetween by means of the screws 17. This baffle plate extends outwardly and upwardly toward the casing 11 providing a partition extending nearly across the annular chamber formed by casing 11 and drum 15, 16, thus dividing it into two annular chambers communicating with each other by a narrow annular opening between the outer edge of the baffle and casing 11. The upwardly dished baffle member 21 together with head 15 form an annular receptacle for the fasteners above the agitator brushes 20.

The casing 11 is slotted at 22 for the reception of the upper end of the raceway members 23, 24. Slot 22 is partially closed by an adjustable plate 25 which allows for insertion of different sizes of raceway members. A separator member 26 projects partially within the slot 22 and cooperates with raceways 23, 24 to deliver an independent series of fasteners to each raceway in opposed positions.

The hopper 7, 11 is supported in an inclined position on the bracket member 1 and is provided in its cover member 12 with an opening 27. A bracket member 28 is also fastened to the bracket 1 and serves to support the rear end of a reservoir 29 which rests by gravity thereon. The lower end of reservoir 29 is provided with an opening adapted to register with opening 27 of the hopper and is held in registry therewith by means of a plate 30 fastened on the reservoir and having a slot therein cooperating with a pin 31 projecting from the cover 12. It is thus seen that reservoir 29 rests by gravity on the support 28 and the hopper 11, and can be removed readily for replenishment. If desired the slot in plate 30 may be provided with one or more notches 30′ constructed to engage pin 31. By this construction the degree of registry of the openings in the reservoir and hopper may be varied to vary the effective feed opening to the hopper and consequently affect the rate of feed. It should also be noted that due to the inclined mounting of the hopper baffle plate 21 is also inclined, and that opening 30 is so positioned as to feed onto the baffle plate above its lowest portion.

Operation: Reservoir 29 is filled with fasteners and is placed in position on bracket 28 with its opening registering with the opening 27 of the reservoir. On clockwise rotation of shaft 14 the two-part drum comprising the head 15 and ring 16 is rotated carrying with it agitating brushes 20 and baffle plate 21. The fasteners from the reservoir 29 drop upon the upper dished surface of baffle 21, which in its rotation tends to carry them upward around the central drum. During this operation a limited number of fasteners find their way over the outer edge of the baffle plate and fall into the lower annular chamber of the hopper where they are engaged by the brushes. The inclination or dishing of baffle 21 is so proportioned that the flow of fasteners over its edge is retarded just sufficiently to keep the agitating brushes properly supplied with fasteners and yet leave room for free movement of the fasteners as they are moved by the brushes so that they may be readily positioned to escape from slot 22 and into the raceways. The agitating brushes are readily removed for repairs or other purposes by loosening the screws 17 whereupon they may be removed with their ferrules from ring 16. The entire removal of screws 17 allows the drum members and baffle plate, as well as the brushes, to be disassembled.

In Fig. 3 is shown a modified means of adjusting the width of slot 22 to accommodate different sizes of raceway members. In this construction base plate 7 is extended beneath slot 22 as in the form previously described and carries at its end angle member 7′. The vertical leg of angle 7′ carries the separator member 26, and closure plate 25′, both separator member and closure plate being mounted with capacity for small vertical adjustment by providing vertically elongated slots in angle 7 through which fastening screws for these are passed. This is the preferred construction since by it all projections on the interior of the hopper tending to interfere with the proper movement of its contents are eliminated.

Having thus described one embodiment of my invention what I claim as my invention is,—

1. In an eyelet-setting machine, a cylindrical hopper, an agitator therein, and an upwardly dished and inclined annular baffle-plate spaced substantially from said hopper throughout its periphery and arranged to distribute eyelets over its edge to said agitator.

2. In an eyelet-setting machine, a hopper, an agitator therein, a reservoir adapted to deliver eyelets to said agitator, means moving with said agitator within the hopper adapted to retard the flow of eyelets between the reservoir and the agitator, and means for varying the rate of delivery of eyelets from said reservoir.

3. In a feeding mechanism for eyelets and the like, a hopper, a closed two-part drum occupying the central portion of said hopper, agitating elements carried by one of said drum parts, and means to fasten said

drum parts together, said means also securing said agitating elements in position upon their respective drum part.

4. In a feeding mechanism for eyelets and the like, a hopper, a closed two-part drum occupying the central portion of said hopper, agitating elements carried by said drum, and means to fasten the two parts of said drum together, said means serving to secure said agitating elements to said drum.

5. In a feeding mechanism for eyelets and the like, a hopper, a central drum therein, an agitating element, a baffle-plate, and common fastening elements for securing said agitating element and baffle-plate together upon said drum.

6. In an eyelet feeding mechanism, a cylindrical hopper formed with a peripheral discharge aperture, a rotary drum mounted concentrically therein and forming with the hopper an annular chamber extending from top to bottom of the latter, agitating elements carried by said drum and having a range of movement adjacent said aperture, and a baffle plate also carried by said drum within said hopper and positioned above said agitating elements.

7. In an eyelet feeding mechanism a cylindrical hopper formed with a peripheral discharge aperture, a rotary drum mounted concentrically therein and forming with the hopper an annular chamber, means for delivering eyelets intermediate said drum and the peripheral wall of said hopper, agitating elements carried by and disposed externally to said drum and a dished baffle plate also carried by said drum within said hopper and positioned above said agitating elements.

8. In an eyelet feeding mechanism, a cylindrical hopper formed with a peripheral discharge aperture, a rotary drum mounted concentrically therein and forming with the hopper an annular chamber, agitating elements carried by and disposed externally of said drum, and an upwardly dished baffle plate carried by said drum within said hopper and forming a receptacle above said elements.

9. In an eyelet feeding mechanism, a hopper, an inclined annular rotary baffle-plate therein, means to rotate said baffle-plate, and stationary means for delivering eyelets to said baffle-plate intermediate the lowest and highest points of its inclined surface and upon the upwardly moving side of the same, whereby the eyelets are carried upwardly preparatory to discharge over the edge of the baffle-plate.

10. A hopper having a slotted side member, a base plate extending beyond said side member beneath said slot, a raceway member projecting into said slot, and means carried by said base plate extension partially closing said slot.

11. A hopper having a slotted side member, a base plate extending beyond said side member, a race member supported by said extension in position to receive material passing through said slot, and a member carried by said base plate independently of said side member for adjusting the effective width of said slot.

12. In a feeding mechanism, a hopper, an inclined rotary baffle plate therein, means to rotate said baffle plate in one direction, means to feed material to said plate at one side of its axis of rotation and between the highest and lowest portions only of its inclined surface, and means for discharging material from said hopper.

In testimony whereof, I have signed my name to this specification.

GEORGE W. JACQUES.