US00D769141S

(12) United States Design Patent

Merrill et al.

(10) Patent No.: US D769,141 S
(45) Date of Patent: ** Oct. 18, 2016

(54) **INDICATOR ASSEMBLY**

(71) Applicant: **Meriam/Scott Fetzer Company**, Westlake, OH (US)

(72) Inventors: **John W. Merrill**, North Ridgeville, OH (US); **Bryan E. Pavlovic**, Strongsville, OH (US)

(73) Assignee: **Meriam/Scott Fetzer Company**, Westlake, OH (US)

(**) Term: **15 Years**

(21) Appl. No.: **29/532,200**

(22) Filed: **Jul. 2, 2015**

(51) **LOC (10) Cl.** **10-04**

(52) **U.S. Cl.**
USPC **D10/85**

(58) **Field of Classification Search**
USPC D10/46, 85
CPC B60C 23/0408; B60C 23/0494; G01L 7/043; G01L 7/00–7/24; G01L 13/00–13/06; G01L 15/00; G01L 17/00–17/005; G01L 19/00–19/16; G01L 23/00–23/32; G01L 27/00–23/02
See application file for complete search history.

(56) **References Cited**

U.S. PATENT DOCUMENTS

7,430,901 B2 * 10/2008 Wu G01L 17/00 73/146
D612,277 S * 3/2010 Cain D10/85
D653,572 S * 2/2012 Ohtani D10/102
D705,101 S * 5/2014 Haener D10/85
D747,988 S * 1/2016 Matsumiya D10/102

OTHER PUBLICATIONS

Pressure Gauge Advertisement, 8 pages. This pressure gauge was sold or publically displayed more than 1 year prior to the filing date of the subject application, namely, Jul. 1, 2014.

* cited by examiner

Primary Examiner — Antoine D Davis
(74) *Attorney, Agent, or Firm* — Tarolli, Sundheim, Covell & Tummino LLP

(57) **CLAIM**

The ornamental design for an indicator assembly, as shown and described.

DESCRIPTION

FIG. **1** is a top front perspective view of an indicator assembly;
FIG. **2** is a top rear perspective view thereof;
FIG. **3** is a bottom front perspective view thereof;
FIG. **4** is a bottom front perspective view thereof;
FIG. **5** is a front elevation view thereof;
FIG. **6** is a rear elevation view thereof;
FIG. **7** is a left side elevation view thereof;
FIG. **8** is a right side elevation view thereof;
FIG. **9** is a top plan view thereof; and,
FIG. **10** is a bottom plan view thereof.
Those portions of the Figures shown in broken lines are for illustration only and form no part of the claimed design.

1 Claim, 8 Drawing Sheets

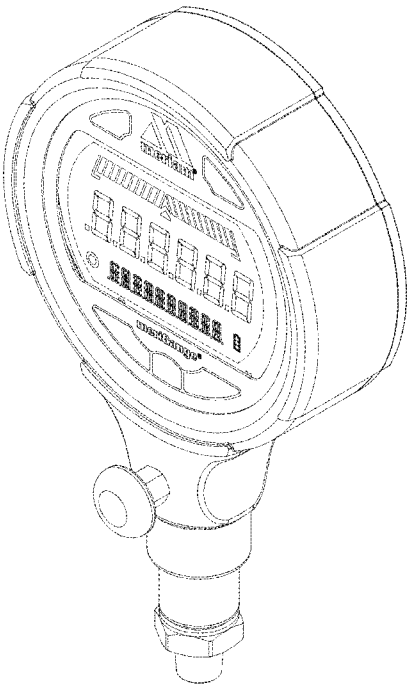

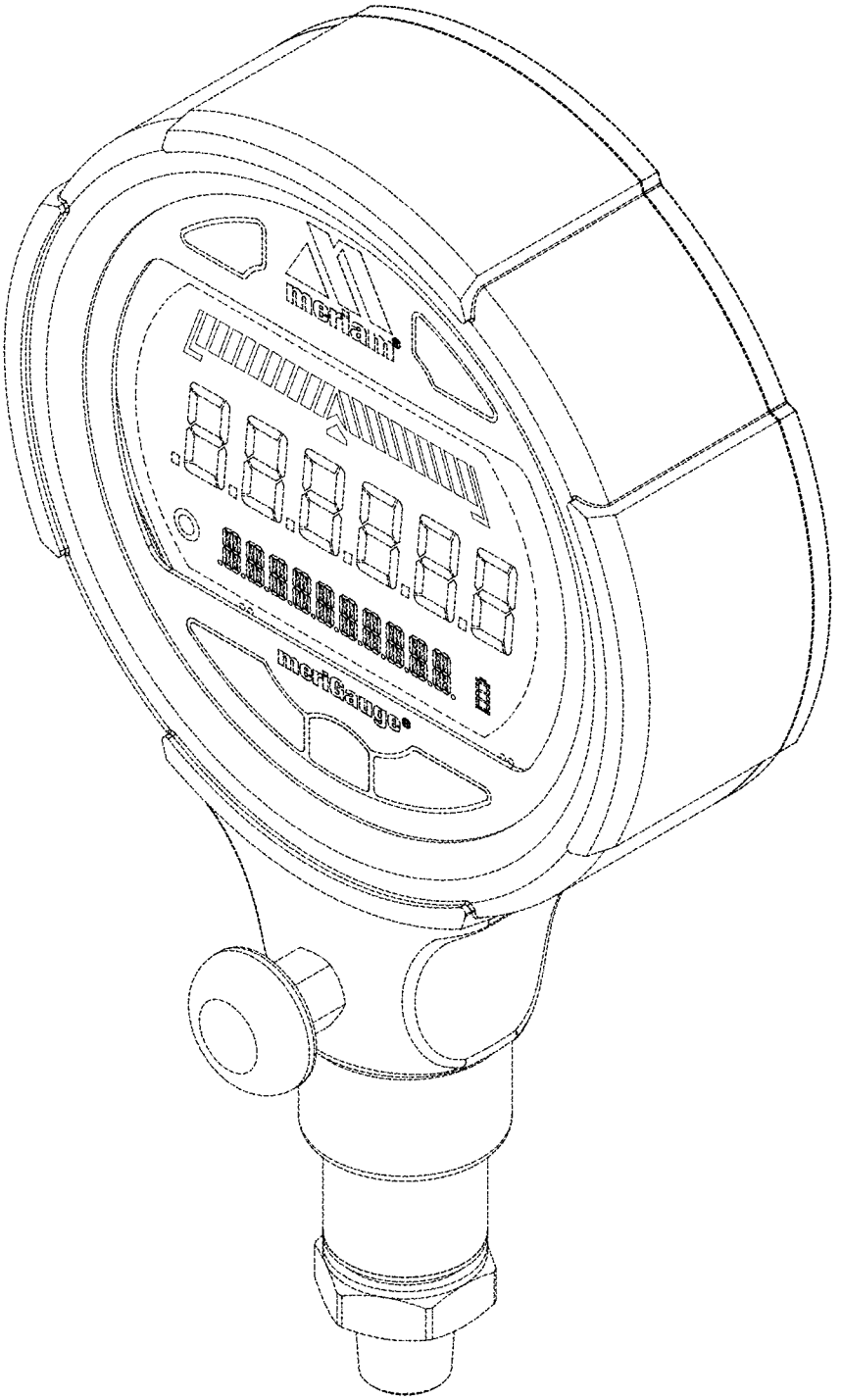

FIG. 1

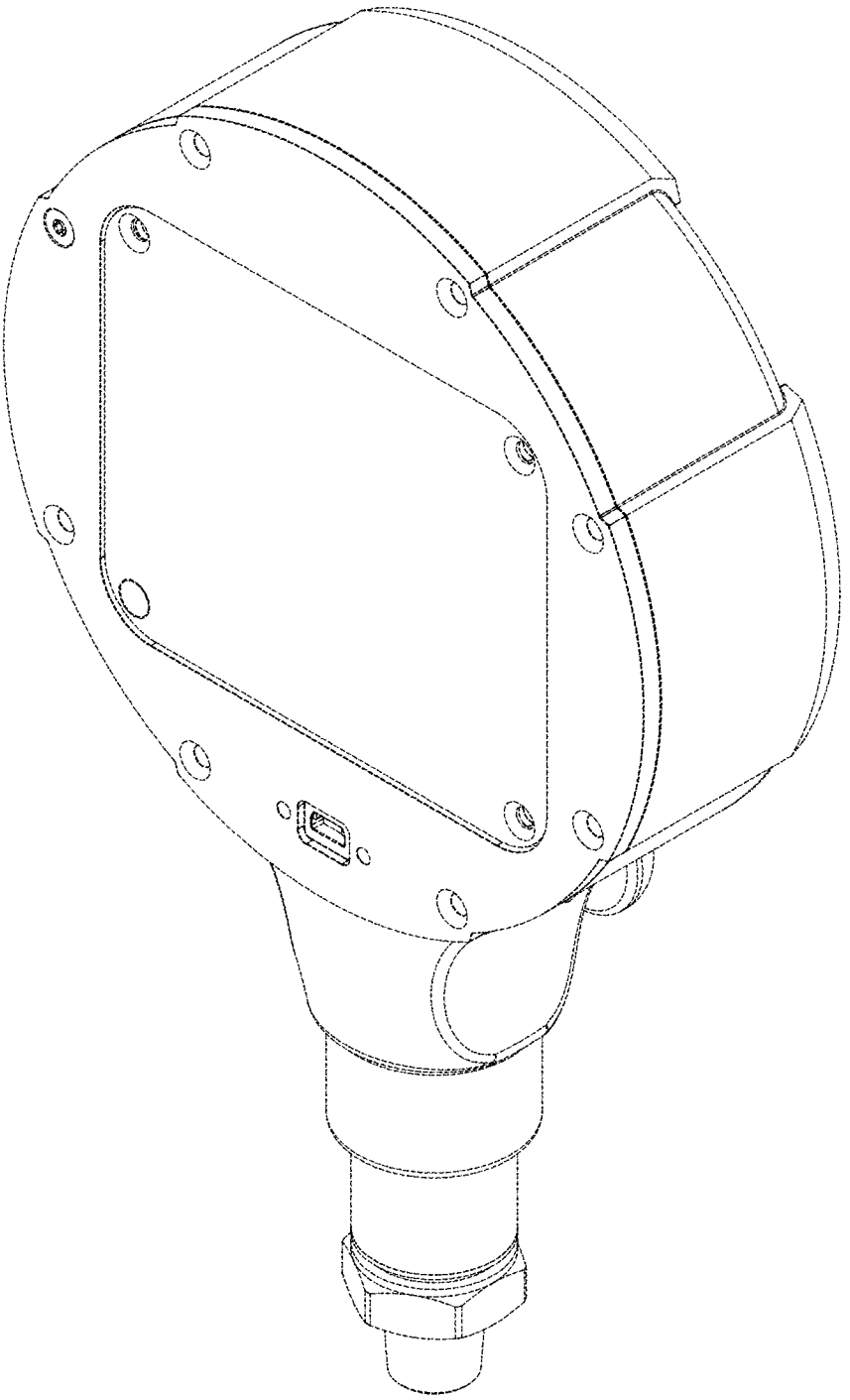

FIG. 2

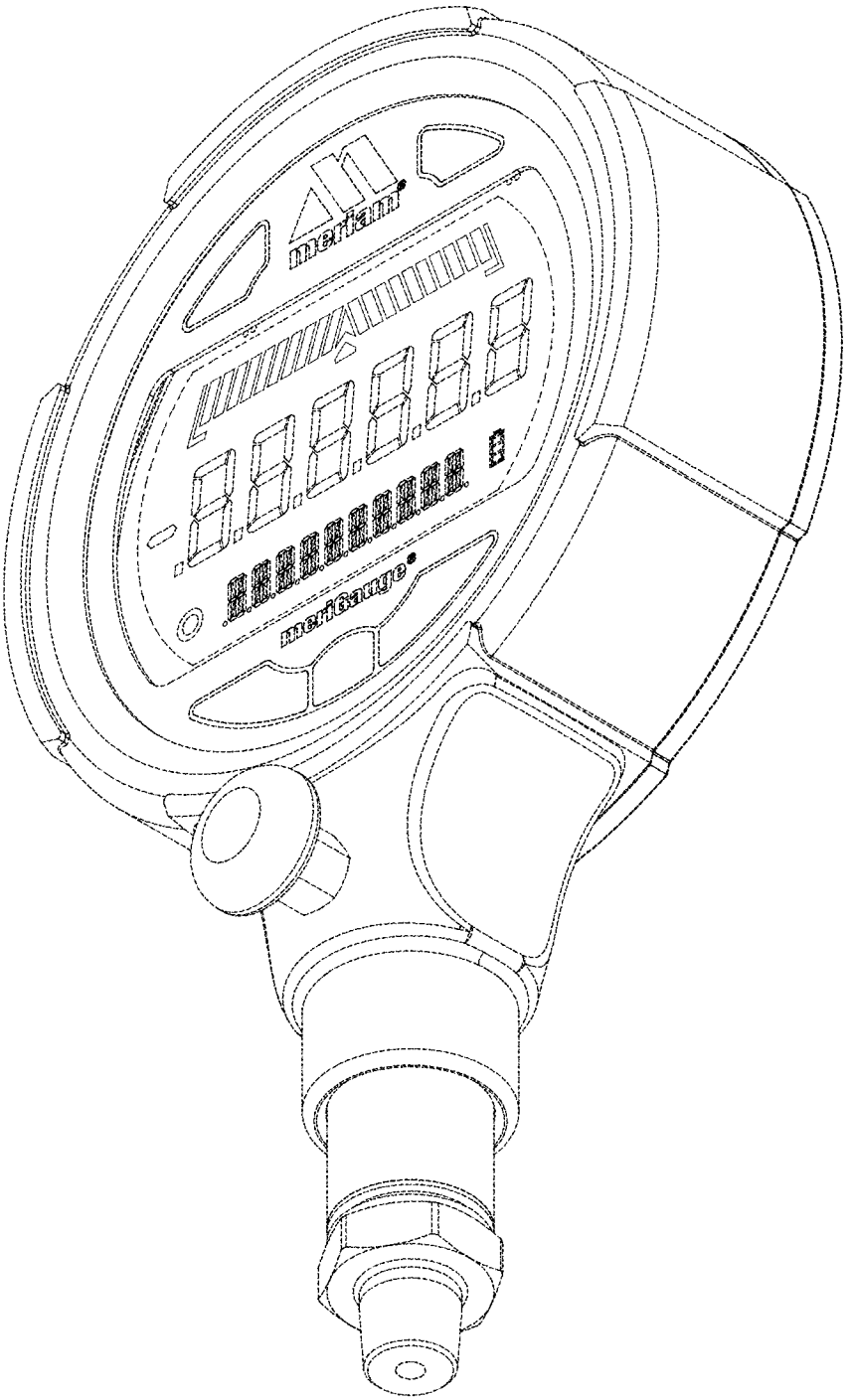

FIG. 3

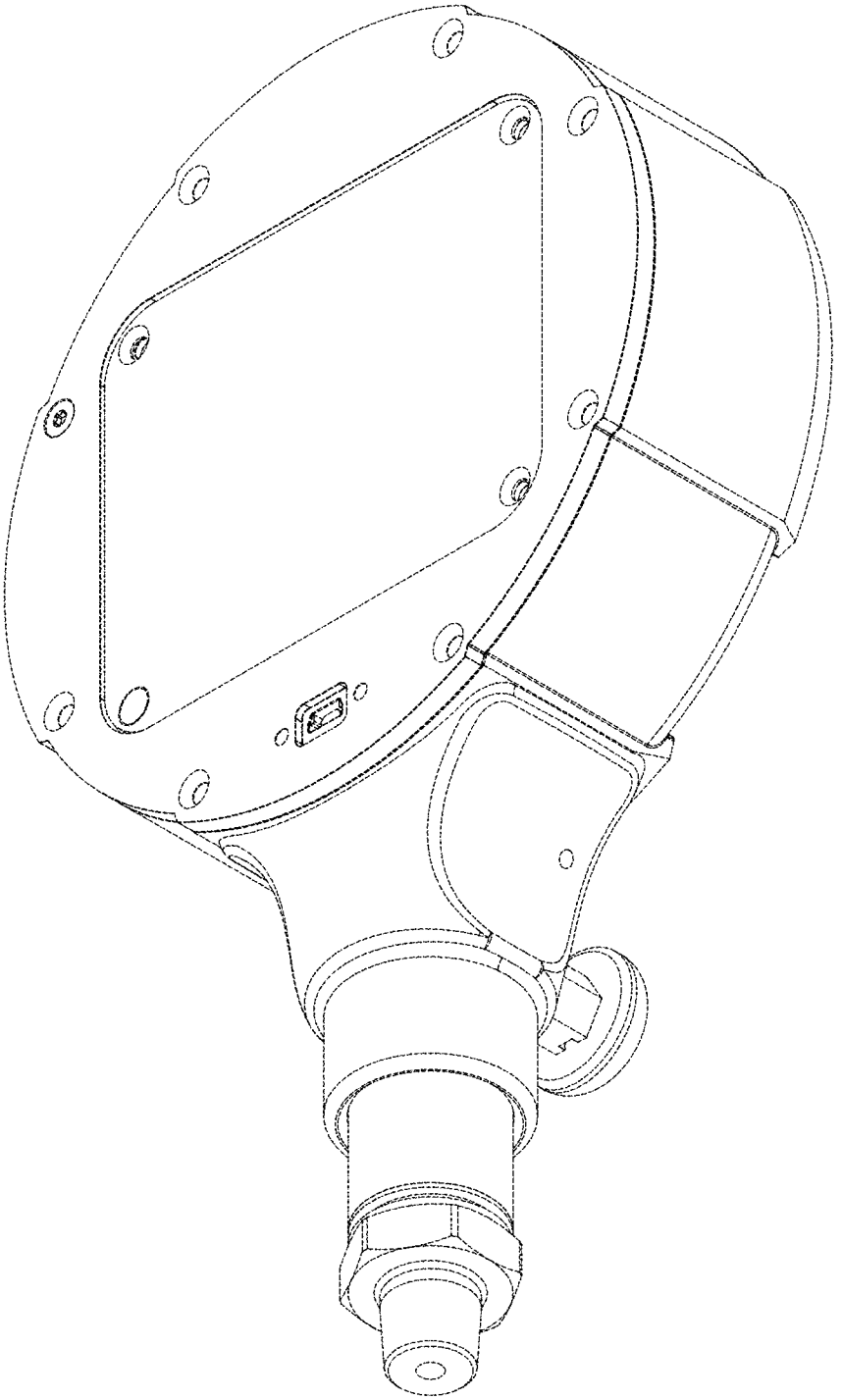

FIG. 4

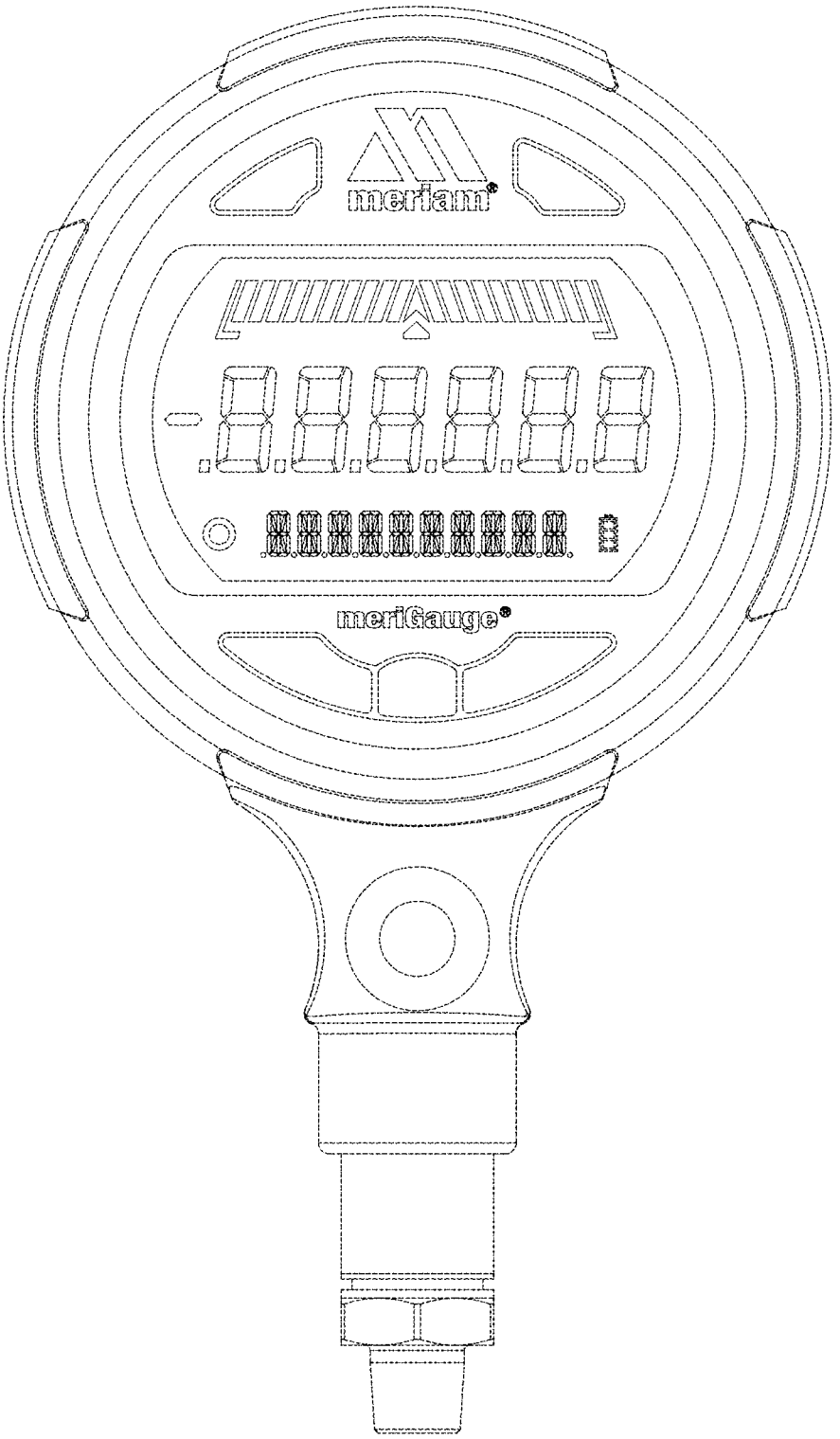

FIG. 5

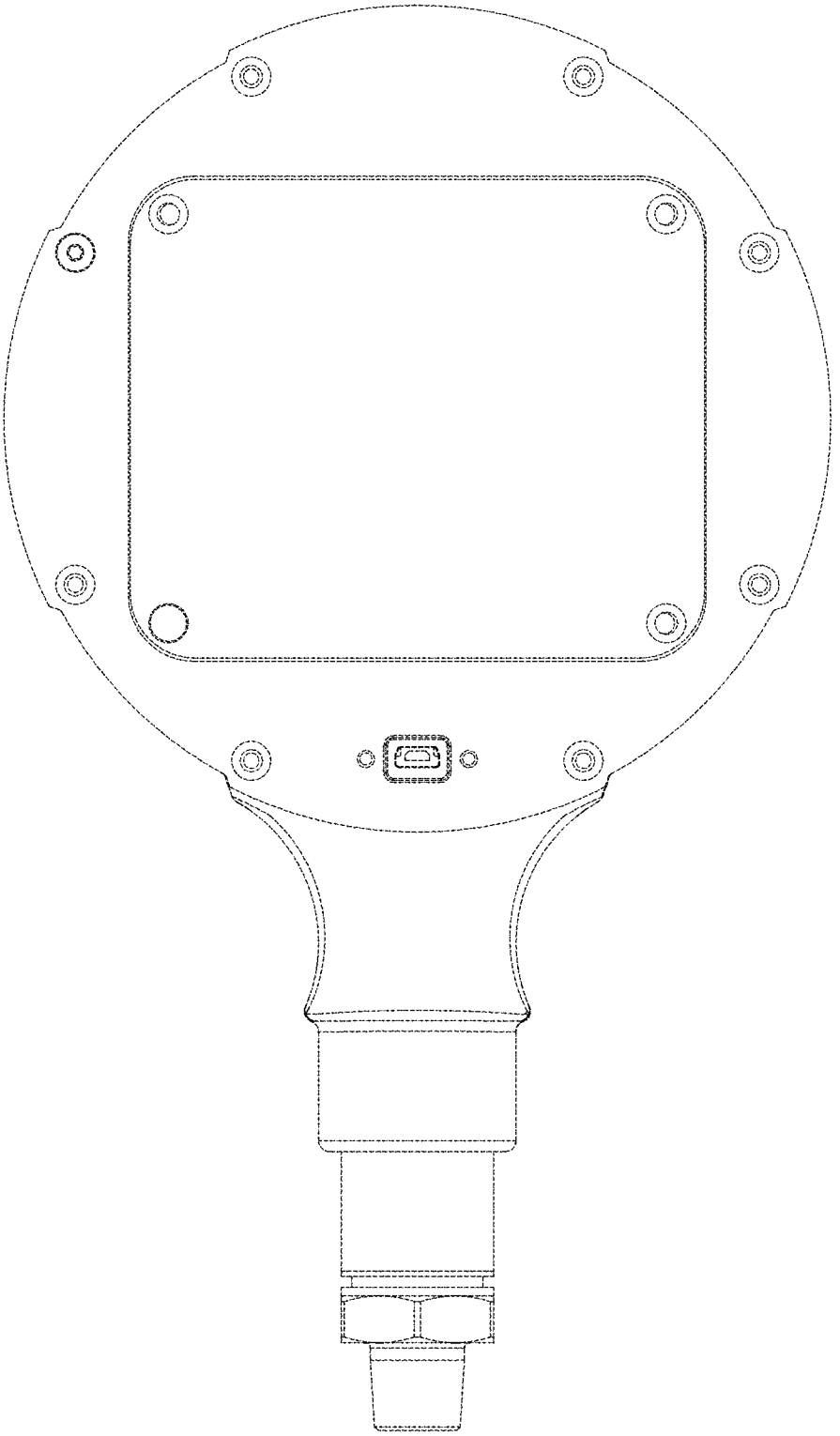

FIG. 6

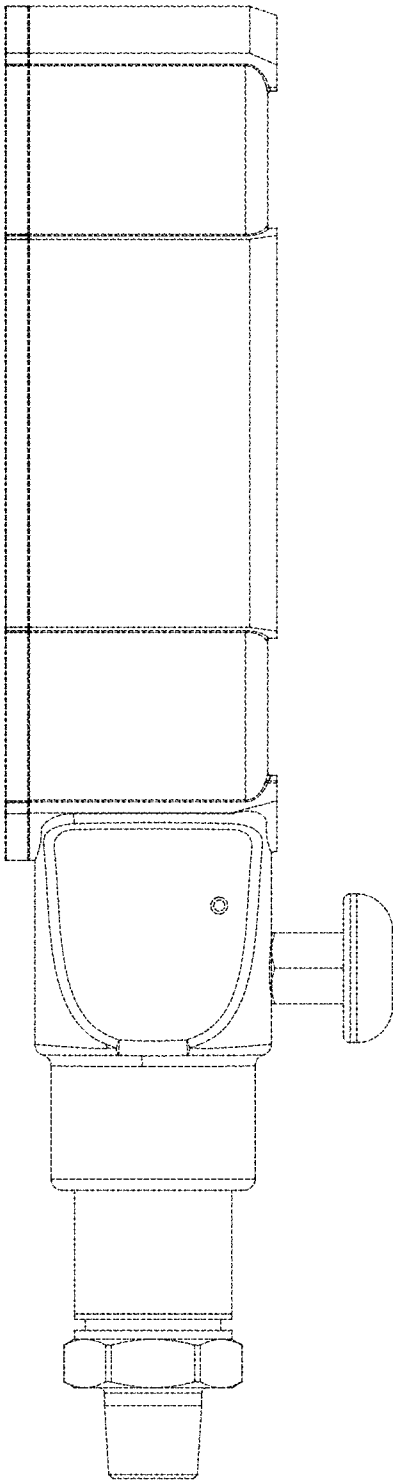

FIG. 7

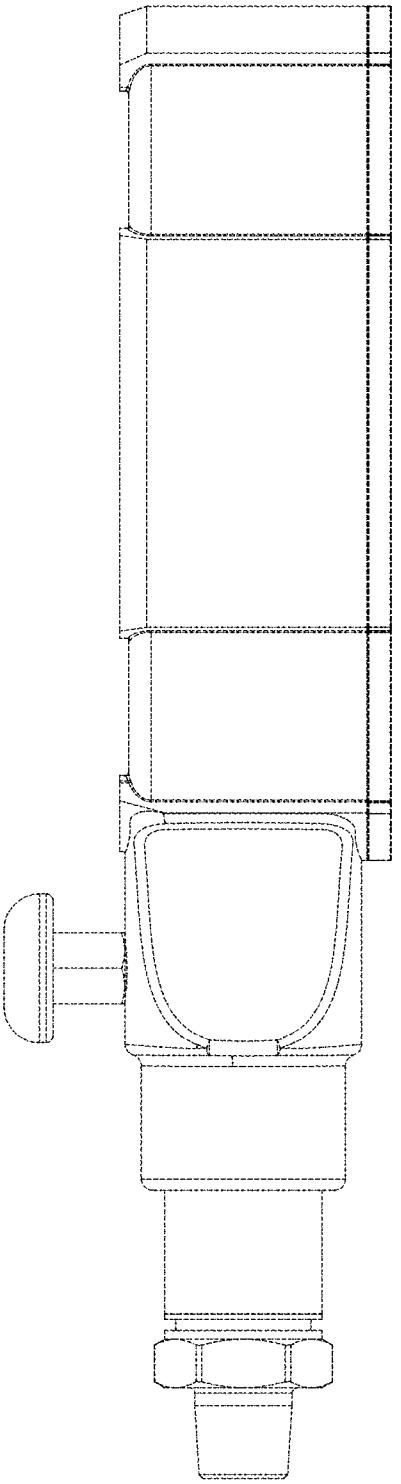

FIG. 8

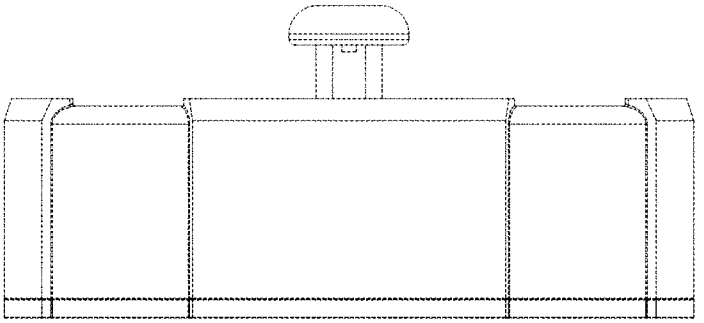

FIG. 9

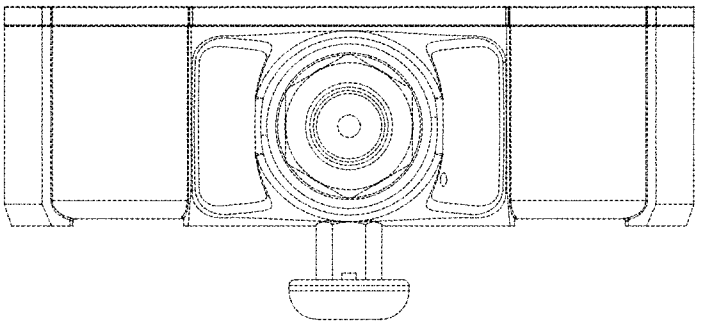

FIG. 10