July 14, 1931. C. H. KESTENMAN 1,814,475

CLASP FOR BRACELETS, STRAPS, LINKAGES, OR THE LIKE

Filed April 21, 1931

Fig. 1.

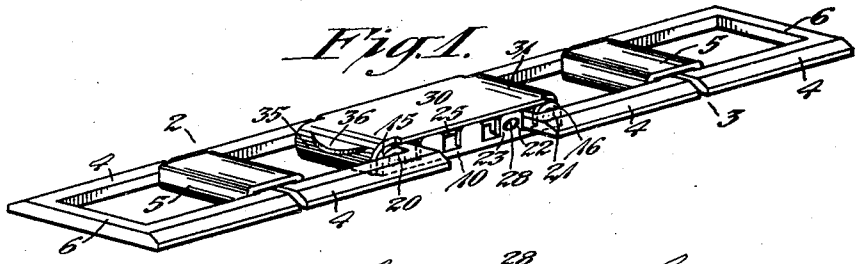

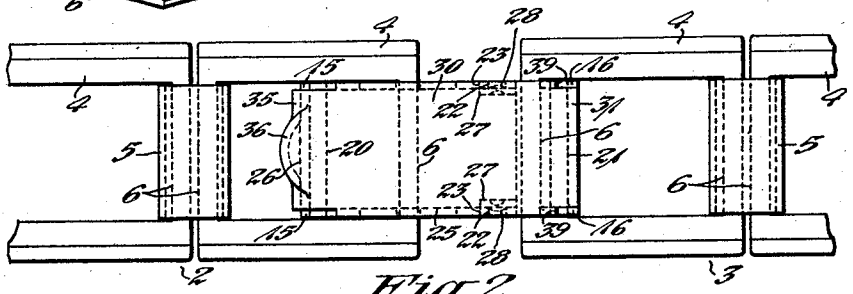

Fig. 2.

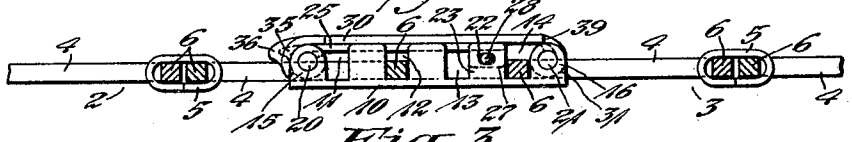

Fig. 3.

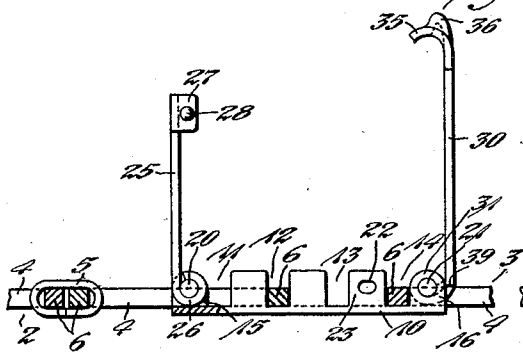

Fig. 4.

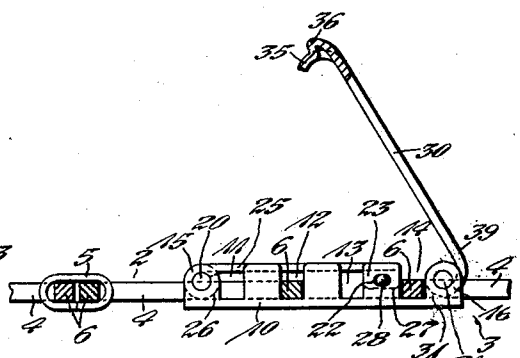

Fig. 5.

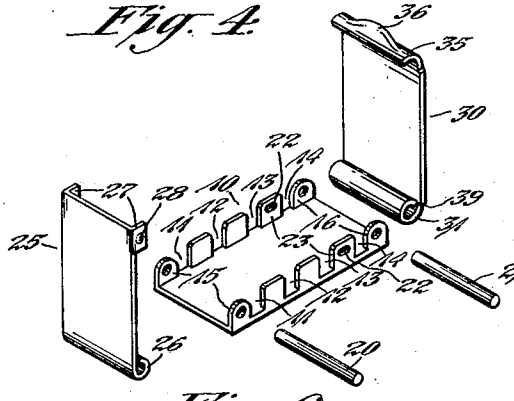

Fig. 6.

Inventor:
Charles H. Kestenman
By
Cummings & Cummings
Attorneys.

Patented July 14, 1931 1,814,475

UNITED STATES PATENT OFFICE

CHARLES H. KESTENMAN, OF PROVIDENCE, RHODE ISLAND, ASSIGNOR TO KESTENMAN BROS. MFG. CO., OF PROVIDENCE, RHODE ISLAND, A CORPORATION OF RHODE ISLAND

CLASP FOR BRACELETS, STRAPS, LINKAGES OR THE LIKE

Application filed April 21, 1931. Serial No. 531,733.

This invention relates to improvements in clasps or fastening-devices for connecting the ends of wrist-watch straps, bands, bracelets or other linkages.

One object of the invention is to provide a clasp or fastening-device of simple construction which effects a more secure joiner of the ends of the linkage or bracelet, and which is proof against unwarranted or accidental unfastening.

Another object of the invention is to provide a clasping-device of the type specified having two independently operated means for clasping the free ends of the linkage or bracelet to insure greater security.

Another object of the invention is to provide a clasping-device of the type specified having a series of notches along its length for receiving one of the free ends of the linkage or bracelet whereby it may be adjusted to the proper length to fit the wrist, and having means incorporated therein for clasping or holding the end-link in the notch in which it is placed.

Another object of the invention is to provide a clasping-device of the type specified having means for releasably securing the opposite end of the linkage or bracelet, whereby it may be disconnected from the clasp to permit removal of the linkage or bracelet from the wrist without disturbing the adjustment of its length.

Another object of the invention is to provide a clasp of the type specified which may be manufactured from sheet-metal parts struck up in dies and assembled with a minimum of hand operations.

Another object of the invention is to provide a clasp of the type specified wherein the mechanical elements are concealed from view and all unsightly joints or obtrusive projections eliminated.

Further objects of the invention are set forth in the following specification which describes a preferred embodiment of the invention, by way of example, as illustrated by the accompanying drawings. In the drawings:

Fig. 1 is a perspective view representing the ends of two lengths of a bracelet or linkage secured together by means of the present improved clasping-device;

Fig. 2 is an enlarged plan view of the same showing the parts of the device in closed or clasped relationship;

Fig. 3 is an edge view of the same;

Fig. 4 is a similar edge view showing the clasp opened to permit disconnection of the ends of the linkage or adjustment in its length;

Fig. 5 is a similar view illustrating the manner in which one end of the linkage is secured in its adjusted position in the clasp while the opposite end thereof is free to be disconnected; and

Fig. 6 is a composite perspective view of the several elements of the clasp illustrating the method of assembling the parts.

The present improved clasping-device comprises, in general, a base-member having side flanges with notches or openings therein for receiving the end links of the bracelet or linkage whereby the latter may be adjusted in length to fit the wrist of the wearer, and means for releasably retaining the links in connection with the clasp.

Referring to the drawings, as herein illustrated the two sections 2 and 3 of the bracelet or linkage, which are adapted for attachment to a wrist-watch, comprise main links 4 connected by smaller loop-like links 5 folded around the adjoining end-bars 6 of the main links. While only one type of linkage is herein shown and described, it is to be understood that the present improved clasp is adapted for use with chains and bracelets of other types having end links provided with cross-members. The present invention is therefore not limited to any precise method of application to use.

Referring particularly to Figs. 1 and 6, the base-member 10 of the clasp is constituted by a flat, bottom plate constructed of sheet-metal with upstanding flanges on its sides which are notched to provide a series of opposite openings 11, 12, 13 and 14. The end portions 15 and 16 of the opposite flanges constitute hinge-ears, being perforated with circular holes for receiving hinge-pins 20 and 21, respectively, on which the two cooperat-

ing clasping-members 25 and 30 are pivoted. Elongated holes 22 are punched through the two opposite flange portions 23 next adjacent the hinge-ears 16 to serve as retainer-openings for engaging detents on one of the hinged parts of the clasp in the manner as later more fully explained.

The clasp-member 25, previously mentioned, comprises a sheet-metal plate having at one end a cylindrical bearing portion 26 for pivoting it on the cross-pin 20 extending between the ears 15 of the base-member 10. At its opposite end the member 25 is provided with a pair of extensions or ears 27 bent down at right-angles to its sides and indented to form projections or protuberances 28 on their outer faces adapted to snap into the slotted openings 22 in the flange-portions 23 of the base-member 10 when the parts are closed together in clasped relationship as shown in Figs. 1, 2 and 3.

To attach the section 2 of the bracelet to the clasp its end link is engaged over the member 25 while the latter is in raised position as shown in Fig. 4. The end-bar of the link is placed within one of the notches 11, 12 or 13, in accordance with the length required to adjust the bracelet to the wearer's wrist, and the member 25 is then folded downwardly on its pivot 20 to snap the detent-protuberances 28 into the openings 22 in the flanges on the base 10. The two cooperating parts of the clasp are thus securely locked together to hold the end link of the bracelet-section 2 in the notch in which it has been positioned or adjusted. It will be observed by reference to Fig. 2 that the member 25 fits snugly between the cut away flanges on the sides of the base-member 10 so that these parts are held from side-play or distortion.

To secure the opposite section 3 of the bracelet to the clasping-device a second hinged member 30 is employed. Referring particularly to Fig. 6, the member 30 comprises a sheet-metal plate having one end formed into a loop or cylindrical bearing 31 through which the hinge-pin 21 extends to pivotally connect this member to the end of the base-member 10. The opposite end of the member 30 is bent downwardly to form an arcuate detent-latch or catch 35 which is adapted to snap over the bearing 26 of the member 25 as the parts are folded into closed relationship. To facilitate the manual operation of unclasping the device, a lip or projection 36 is formed on the member 30 to permit the insertion of the fingernail thereunder for lifting the member 30 upwardly. The projection 36 is formed by punching or extruding the metal outwardly as clearly shown in Fig. 5.

Referring to Figs. 2 and 6, the ends of the bearing 31 are spaced inwardly from the edges of the member 30 to provide shoulders 39 which are adapted to strike against the edges of the hinge-ears 16 on the base-member 10 as the member 30 is swung upwardly to limit its movement in this direction, see Fig. 4.

The device operates as follows: The two members 25 and 30 are first turned on their pivots 20 and 21 to a vertical position as illustrated in Fig. 4. One of the bracelet-sections 2 is connected to the clasp with the cross-bar 6 of its end link engaging in one of the notches, for example in the notch 12 as shown in Fig. 4. The member 25 is then folded down until its detent-protuberances 28 snap into the openings 22 in the flange-portions 23, see Fig. 5. The section 2 of the bracelet is thus releasably clasped within the fastening device. To clasp the bracelet around the wrist, the end link of the opposite section 3 is placed over the member 30 and its cross-bar 6 engaged in the notch 14, after which the member 30 is folded down over the member 25 in the manner as illustrated in Fig. 3. The latch 35 on the member 30 is snapped over the bearing 26 on the member 25 to yieldingly engage therewith, see Figs. 1, 2 and 3. It will be observed by reference to these views that in addition to securing the bracelet section 3 to the clasp, the member 30 acts as a cover to conceal the mechanical elements of the device. It is also to be observed that the relatively wide hooked end 35 of the member 30 affords a long bearing or latching surface to insure greater security and a more positive clasping of the parts, whereby to guard against side play or distortion and unwarranted or accidental unfastening of the clasp.

To remove the bracelet from the wrist it is only necessary to insert the fingernail under the lip 36 on the end of the member 30 to lift the latter and release the latch 35 from the bearing 26 as shown in Figs. 4 and 5. With the member 30 swung upwardly, the cross-bar 6 of the end link on the bracelet-section 3 may be removed from the notch 14 in the base-member 10 by lifting it off over the end of the member 30. During the disconnection of the section 3 of the linkage from the clasp the opposite section 2 is retained in the notch 12 by the member 25 as shown in Fig. 5 to preserve the adjustment of the bracelet.

When it is desired to lengthen or shorten the bracelet to adjust it to the wrist the wearer has only to lift the member 25 to free its detent-protuberances 28 from the openings 22 in the base 10 and raise it upwardly to the position shown in Fig. 4. The cross-bar 6 of the end link of the bracelet may then be removed from the notch in which it is held and placed in one of the other notches to shorten or lengthen the bracelet as required.

It will be observed from the foregoing that a particular feature of the present improvement consists in the double clasping arrangement whereby each of the sections of the

bracelet may be independently clasped within the device. This feature provides that one section may be retained in adjusted relationship in the clasp while the other section is free to be disconnected therefrom to remove the bracelet from or apply it to the wrist.

As another feature of improvement, the device is provided with means incorporated therein for adjusting the length of the bracelet and means for positively holding the adjustable section in adjusted position.

The present invention provides an extremely simple yet efficient device for the purpose specified, with the parts constructed from sheet-metal stampings to render them economical to manufacture. The various elements of the device may be assembled without the use of solder, screws or springs, thus eliminating all parts liable to become loose and cause shackly joints. When in closed or clasped relationship the mechanical elements of the device are entirely hidden from view beneath the cover or upper member 30. The cover 30 may be suitably embossed, engraved or otherwise ornamented on its face to enhance the artistic appearance of the whole article.

The hook or catch 35 on the member 30 is of considerable width to provide an adequate engaging surface between the clasping means to effect a more positive and secure clasping of the parts.

While I have herein shown and described a preferred form of construction of the improved clasp, it is to be understood that various modifications may be made in the structure and arrangement of its parts without departing from the spirit or scope of the invention. Therefore, without limiting myself in this respect, I claim:

1. A clasp for the purpose specified comprising a base-member having a series of openings for receiving the end links of a chain or bracelet, a member hinged to said base-member and foldable into position thereagainst to hold one of the end links in adjusted position thereon, and a second member hinged to the base-member and foldable across the top of the first folding member to retain the parts in closed relationship with the ends of the bracelet connected thereto.

2. A clasp of the type specified comprising a base-member having a series of openings for receiving the end links of a chain or bracelet, a member hinged to the end of the base-member and foldable thereagainst to hold one of the end links in adjustable position on the base-member, a second foldable member hinged to the opposite end of the base-member to adapt it to be closed down across the top of the first folding member, and latching means on the second member for releasably securing it in closed position to maintain the end links connected with the clasp.

3. In a device of the type specified, the combination of a base-member having notches spaced along its sides for receiving the end links of a chain or bracelet, a member hinged to one end of the base-member and foldable into position across the notches therein to maintain one of the end links in adjusted relationship on the base-member, and a second foldable member hinged to the opposite end of the base-member to adapt it to fold down against the top of the first folding member to secure the opposite end link in place and to cover and conceal the first folding member.

4. In a device of the type specified, the combination of a base-member having a series of notches spaced along its sides for receiving the end links of a chain or bracelet, a member hinged to the end of the base-member to adapt it to fold down across the notches and provided with detent-means engageable with means on the base-member to releasably hold the parts in closed relationship, a second foldable member hinged to the opposite end of the base-member and foldable down against the first folding member in position to secure the opposite end link in the end notch of the base-member, and latching means on the second folding member for releasably securing it in closed relationship.

5. In a device of the type specified, the combination of a base-member comprising a substantially flat plate with side flanges projecting upwardly therefrom and formed with notches for receiving the end links of a chain or bracelet, a member pivoted to one end of the base-member to adapt it to fold down across certain of the notches in the side flanges thereof, and a second foldable member hinged to the opposite end of the base-member to adapt it to fold down against the top of the first folding member, said second folding member formed with a latch portion adapted to snap over the hinged end of the first folding member to lock the parts in closed relationship.

6. In a device of the type specified, the combination of a base-member comprising a substantially flat plate having flanges at its sides notched to form a series of openings for receiving the end links of a chain or bracelet, the end portions of the flanges being provided with holes, hinge-pins held in said holes in the flanges, a member pivoted on one of the hinge-pins to adapt it to close down across the notches in the flanges of the base-member, detent-means for releasably securing the folding member in closed position on the base-member, and a second folding member pivoted on the hinge-pin at the opposite end of the base-member to adapt it to fold down across the top of the first folding

member to cover the same and conceal the notches in the flanges of the base-member, and latching means on the second folding member for releasably securing it in folded position against the first folding member.

In testimony whereof I hereunto affix my signature.

CHARLES H. KESTENMAN.