Oct. 16, 1956 J. F. GIECK 2,766,597

HEAT EXCHANGE DEVICE FOR THE EVAPORATIVE COOLING OF A LIQUID

Filed March 22, 1954

Fig. 1.

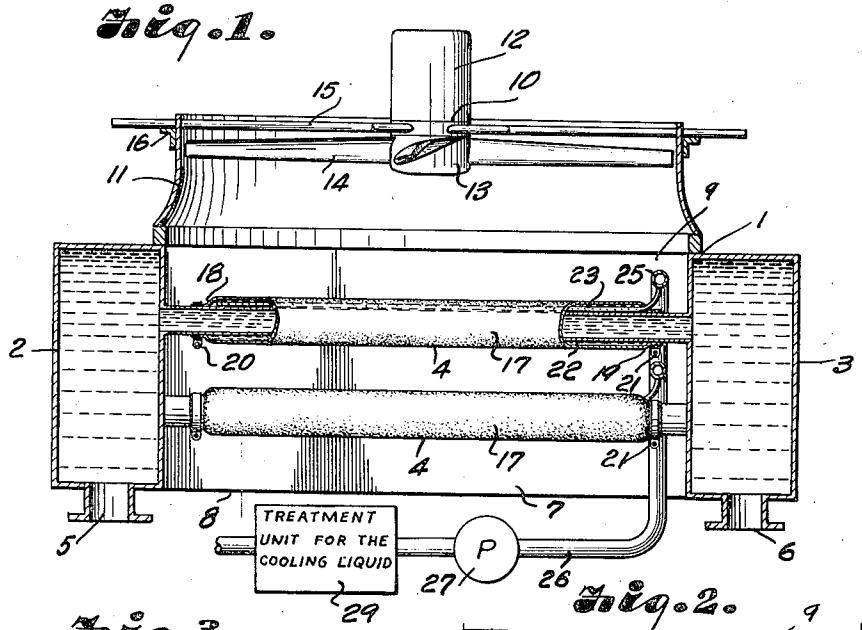

Fig. 2.

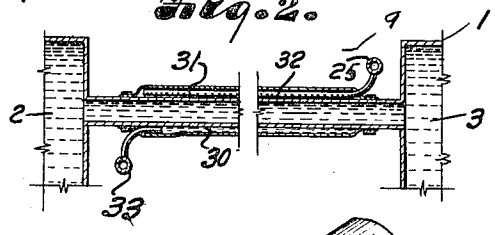

Fig. 3.

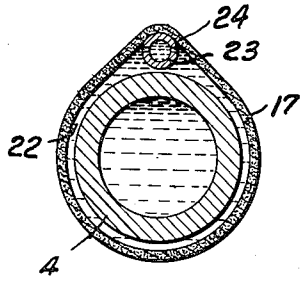

Fig. 4.

INVENTOR.
Joseph F. Gieck.
BY
Fishburn & Mullendore
ATTORNEYS.

United States Patent Office 2,766,597 Patented Oct. 16, 1956

2,766,597

HEAT EXCHANGE DEVICE FOR THE EVAPORATIVE COOLING OF A LIQUID

Joseph F. Gieck, Mission, Kans., assignor to J. F. Pritchard Company, Kansas City, Mo., a corporation of Missouri

Application March 22, 1954, Serial No. 417,875

5 Claims. (Cl. 62—154)

This invention relates to heat exchange devices employing tubes or ducts through which a fluid to be cooled is passed while a cooling liquid is flowed over the exterior surfaces and evaporated responsive to natural or forced circulation, thereby reducing the temperature and increasing the cooling effect.

Heat exchange devices of this character require tremendous volumes of cooling liquid and consequently the pumping and power costs are high. Moreover, such large volumes of cooling liquid may not be readily available.

Another difficulty is that the cooling liquid used in such heat exchange often contains chemicals that cause fouling of the outside surfaces of the tubes with scale and corrosion, thereby reducing the efficiency of the heat exchange.

While the latter objection can be substantially reduced through chemical treatment of the cooling liquid, the large volume required renders such chemical treatment expensive.

The principal objects of the invention therefore are to make the cooling liquid more effective and permit use of a smaller volume; to provide a heat exchange structure whereby the resultant temperature may be controlled by regulating the evaporating effect of the cooling liquid; to provide the heat exchange surfaces with a porous covering and injecting the cooling liquid between surface and covering under pressure sufficient to cause oozing of the liquid through the pores of the covering, thereby producing the evaporating effect and enhancing the cooling action, and to control the temperatures by varying the rate that the cooling liquid oozes through the covering.

Another object is to provide a heat exchange structure which is highly effective with a relatively smaller volume of cooling liquid and thereby make treatment of the liquid economically practical.

In accomplishing these and other objects of the invention hereinafter pointed out, I have provided improved structure, the preferred form of which is illustrated in the accompanying drawings wherein:

Fig. 1 is a vertical section through a heat exchange device constructed in accordance with the present invention for cooling a fluid.

Fig. 2 is a modified form of the invention.

Fig. 3 is a cross section through the tube on the line 3—3 of Fig. 2.

Fig. 4 is a fragmentary perspective view of one of the heat exchange tubes of the heat exchanger.

Referring more in detail to the drawings:

1 designates a heat exchange device constructed in accordance with the present invention and which comprises spaced headers 2 and 3 interconnected by heat exchange tubes 4 through which a liquid to be cooled is caused to flow from the header 2 to the header 3, the liquid being supplied to the header 2 through a connection 5 and discharged from the header 3 through a connection 6. The respective sides of the space between

the headers are closed by end walls 7 to provide a closed passageway having an inlet 8 and an outlet 9 for the passage of air or other gaseous medium by forced or natural circulation.

In illustrated instance, the device is of the forced circulation type in that it includes a fan 10. The fan 10 is supported by a ring or cowl 11 encircling the opening 9. The fan unit 10 includes a motor 12 and a rotor 13, having radial fan blades 14. The motor is supported coaxially of the ring 11 on radial bars 15 that have outer ends carried by supports 16 on the outer side of the ring 11.

The walls of the tubes 4 constitute heat exchange surfaces and in accordance with the present invention, each tube 4 is provided with an exterior covering 17 of porous material, which may also be in the form of a tube sleeved over the tube 4 and having the ends 18 and 19 closed relatively to the exterior of the tube by clamps 20 and 21.

The porous covering 17 has a slightly large inner diameter than the outside diameter of the tubes 4 to provide a liquid distribution passageway 22, around the surface of the tubes, for circulation of a cooling liquid in heat exchange relation with the fluid circulated through the respective tubes.

The cooling liquid is supplied to the passageways 22 through distribution tubes 23 extending within and along the length of the passageways 22 and which have perforations 24 through which the cooling liquid is distributed into contact with the heat transfer surfaces of the tubes 4.

The tubes 23 extend through the covering material and are supplied with cooling liquid from a common header 25. The header 25 is connected with a suitable source of supply through a duct 26 under suitable pressure to cause the liquid to exude through the pores of the covering, for example, under pressure of a pump 27.

The exuded liquid thus gives the effect of sweating and provides the evaporation necessary in reducing temperature of the cooling liquid to cool the fluid that is circulated within the tubes 4 of the heat exchange device.

It is obvious that the temperature of the cooling liquid and the ultimate temperature of the fluid cooled may be controlled by varying the amount of cooling liquid exuded through the pores of the covering so as to control the rate of evaporation. This may be effected by controlling the pressure of the cooling liquid within the passageways 22, as, for example, by regulating the pump discharge pressure.

It is obvious that the volume of cooling liquid required is only that necessary in maintaining the relatively small passages 22 filled with cooling liquid and to replenish the liquid evaporated by the air circulated around the exterior of the tubes.

While I have particularly illustrated and described the invention incorporated in a forced draft type of cooling unit, it is obvious that the invention is adaptable to units having natural draft. It is also obvious that the rate of evaporization may be controlled by providing covering materials having different degrees of porosity to vary the rate at which the liquid exudes to the surface of the respective coverings.

The covering 17 may be provided of any suitable material such as fabric, impregnated fabric, unglazed ceramic material, or any material having sufficient porosity to pass the required amount of cooling liquid.

In installations where corrosive cooling liquids are encountered, the relatively small volume of fluid required makes feasible the practical treatment of the cooling liquid, in which case the cooling liquid is passed through a treating unit that is connected to the supply duct 26 as indicated at 29 before it makes contact with the surface of the tubes 4.

Assuming that the unit constructed as described is of the forced draft type, the inlet and outlet 5 and 6 of the headers are connected with the source of liquid to be cooled and the duct 26 is connected with a source of cooling liquid. With the fan 13 and pump 27 in operation, air is drawn through the opening 7 and passed exteriorly in and around the tubes and discharged through the cowl ring 10, while the cooling liquid is being supplied under pressure to the respective passageways 22 so that the cooling liquid exudes through the porous covering of the tubes and provides a wetted surface in contact with the air circulated by the fan, whereby the cooling liquid on the wetted surface evaporates to effect cooling of the liquid to enhance the cooling action of the liquid in the passage 22, and the liquid circulated through the heat exchange tubes from the header 2 and discharges at lower temperature from the header 3.

The form of invention shown in Fig. 2 illustrates a heat exchange tube 30, having a porous covering 31 clamped to the ends of the tubes as in the first described form of the invention, to provide a closed passageway about the surface of the tube through which a cooling liquid is circulated from a perforated tube 32 extending along the length of the passageway and from which the cooling liquid is distributed for discharge through a duct 33.

From the foregoing, it is obvious that I have provided a heat exchange unit having heat exchange elements capable of operating on relatively small volumes of cooling liquid, and that the cooling effect on the liquid to be cooled is responsive to the cooling effect produced by evaporation of the cooling liquid.

It is also obvious that the small volume of cooling liquid required permits deionized treatment thereof, or distilled water may be used so as to avoid any clogging of the exterior surfaces of the tubes with scale or other foreign material.

What I claim and desire to secure by Letters Patent is:

1. A heat exchange device including a tube for passing a fluid to be cooled, a porous jacket covering the tube and spaced therefrom to provide a passageway about said tube, said porous jacket having ends closed about the tube for confining a cooling liquid around said tube, duct means connected with the passageway for supplying the cooling liquid to said passageway, means connected with said duct means for establishing a pressure on the confined cooling liquid to exude the cooling liquid through the porous jacket and form a wetted surface on said jacket, and means for passing a current of air around said wetted surface of the porous jacket to effect reduction in temperature of the cooling liquid and cooling of the fluid passing through said tube.

2. A heat exchange device including a tube for passing a fluid to be cooled, a porous jacket covering the tube and spaced therefrom to provide a passageway about the tube, said porous jacket having ends closed about the tube for confining a cooling liquid around said tube, a pump, duct means connecting the pump with the passageway for supplying the cooling liquid to the passageway under pressure to exude the confined liquid through the porous jacket and form a wetted surface on said jacket, means for passing a current of air around said wetted surface of the porous jacket to effect reduction in temperature of the cooling liquid and cooling of the fluid passing through said tube, and means for supplying the cooling liquid to said pump.

3. A heat exchange device including a tube for passing a fluid to be cooled, a porous jacket covering the tube and spaced therefrom to provide a passageway about the tube, said porous jacket having ends closed about the tube for confining a cooling liquid around said tube, a pump, a perforated tube within said passageway and extending along said tube, means connecting the pump with the perforated tube for supplying the cooling liquid to the passageway under pressure to exude the confined liquid through the porous jacket and form a wetted surface on said jacket, means for passing a current of air around said wetted surface of the porous jacket to effect reduction in temperature of the cooling liquid and cooling of the fluid passing through said tube, and means for supplying the cooling liquid to said pump.

4. A heat exchange device including a tube for passing a fluid to be cooled, a porous jacket covering the tube and spaced therefrom to provide a passageway about said tube, said porous jacket having ends closed about the tube for confining a cooling liquid around said tube, duct means connected with one end of the passageway for supplying the cooling liquid to said passageway, means connected with said duct means for establishing a pressure on the confined cooling liquid to exude the confined cooling liquid through the porous jacket and form a wetted surface on said jacket, duct means connected with the opposite end of the passageway for effecting circulation of the cooling liquid along the length of said passageway, and means for passing a current of air around said wetted surface of the porous jacket to effect reduction in temperature of the cooling liquid and cooling of the fluid passing through said tube.

5. A heat exchange device including spaced apart manifolds, tubes extending across said space and having ends connected with the respective manifolds for passing a fluid to be cooled from one manifold to the other manifold, porous jackets covering the tubes and spaces therefrom to provide passageways about the tubes, said porous jackets having ends closed about the tubes for confining a cooling liquid around said tubes, a pump, duct means connecting the pump with the passageways for supplying the cooling liquid to the passageways under pressure to exude the confined liquid through the porous jackets and form wetted surfaces on said jackets, means for passing a current of air around said wetted surfaces of the porous jackets to effect reduction in temperature of the cooling liquid and cooling of said fluid when the fluid is passing through the tubes, and means for supplying the cooling liquid to said pump.

References Cited in the file of this patent

UNITED STATES PATENTS

748,296	Miller	Dec. 29, 1903
927,571	Merralls	July 13, 1909
1,428,661	Richardson	Sept. 12, 1922
1,585,217	Uebelmesser	May 18, 1926
2,009,882	Fourness	July 30, 1935
2,529,398	Krieck	Nov. 7, 1950