Feb. 17, 1948. D. R. GIBBONS ET AL 2,435,961

REGULATOR CIRCUIT

Filed May 13, 1944

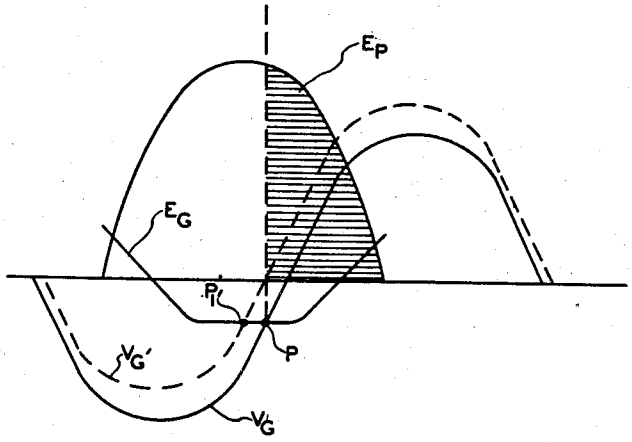

FIG.1.

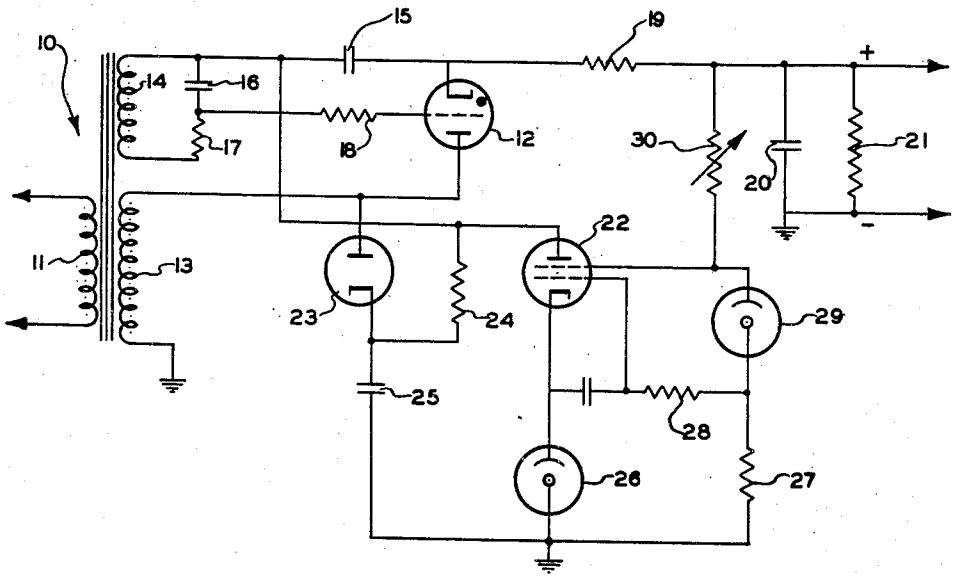

FIG.2.

INVENTOR.
HARRY L. CHANEY
DONALD R. GIBBONS

BY William D. Hall.

ATTORNEY

Patented Feb. 17, 1948

2,435,961

UNITED STATES PATENT OFFICE

2,435,961

REGULATOR CIRCUIT

Donald R. Gibbons, Belmar, and Harry L. Chaney, Red Bank, N. J.

Application May 13, 1944, Serial No. 535,530

10 Claims. (Cl. 175—363)

(Granted under the act of March 3, 1883, as amended April 30, 1928; 370 O. G. 757)

1

The invention described herein may be manufactured and used by or for the Government for governmental purposes, without the payment to us of any royalty thereon.

This invention relates to alternating current rectifier circuits employing gas-filled grid-controlled rectifier tubes, and more especially to the voltage regulation of said circuits.

Grid-controlled thermionic tubes may be broadly grouped into two classes, those having uniform control and those having on-off control. With uniform control, the current flowing through the plate circuit is at all times under absolute control of the grid, variations in the grid voltage being accompanied by variations in plate current. Generally speaking, only high vacuum tubes are capable of performing this type of control.

Gas-filled tubes are normally capable of providing only an on-off control, that is, they will permit either the full flow of current through the plate circuit or none, but cannot graduate the flow between these limits. Actually, however, this is true only for instantaneous values of current and voltage, inasmuch as gas-filled triodes can be used to vary the average flow between zero and maximum in an alternating current cycle.

Gas-filled tubes find wide application in rectifier circuits since they are capable of passing comparatively large currents with very little internal voltage drop. The type most commonly employed is the hot cathode mercury vapor tube which, when equipped with a control grid, is known in the art under various names such as thyratron or grid-glow tube. Gas-filled grid-controlled rectifier tubes will hereinafter be referred to in this specification as thyratrons.

In a high-vacuum tube the grid bias may be thought of as adding to or subtracting from the space charge so that the electrons have more or less difficulty in reaching the plate. There is no discontinuity in the characteristic of plate current as controlled by the grid voltage. In the thyratron, however, conditions differ greatly between the no-current and the current passing states. Before sufficient ionization takes place for the glow to be established, the tube resembles a high-vacuum tube in that the space charge prevents the flow of current. If the grid voltage is made less and less negative, nothing occurs until a certain critical voltage is attained. Then ionization takes place and the full current flows limited only by the emission of the cathode and the external load resistance. There is

2

a sharp discontinuity in the characteristic. If the tube passes one ampere when conducting, it will pass one ampere no matter what the grid voltage is so long as it is sufficiently positive (or so little negative) that conduction takes place. Thus the grid in a thyratron acts as a one-way control. It can prevent the flow of current, but once the tube has fired, the grid cannot stop the flow of electrons.

There are two general methods of controlling the firing time of thyratron tubes, an amplitude method and a phase method. In the amplitude case, a direct current voltage applied to the grid is varied until the discharge starts, or with a fixed grid voltage the anode voltage is increased until current flows. The phase method, implies the application of alternating current to anode and grid. When the phase relation between these A.-C. voltages is such that the grid of a tube is given the proper critical voltage at some portion of the half-cycle during which the anode is positive, current will flow during the remainder of that cycle.

Since the thyratron will pass current in one direction only, it can readily be used as a rectifier. While the presence of the grid adds nothing to its rectifying properties, it provides a control means for varying the average output current, this feature serving as the basis for the present invention.

The output voltage developed by a power supply employing thyratron rectifiers is subject to fluctuations arising as a result of A.-C. line voltage variations, changes in the load impedance imposed upon the supply, variations in the ambient temperature of the tubes and various other factors.

Accordingly it is the principal object of this invention to automatically stabilize the output voltage of power supplies incorporating thyratron rectifier tubes.

It is a further object of this invention to provide a simple electronic voltage regulator applicable to thyratron rectifier circuits.

For a better understanding of this invention together with other and further objects thereof, reference is had to the following description taken in connection with the accompanying drawing. The scope of the invention will be pointed out in the accompanying claims.

In the accompanying drawing:

Figure 1 is a characteristic curve of a thyratron rectifier tube illustrating the influence of the phase relation between grid voltage and plate voltage upon the firing time of the tube.

Figure 2 is a schematic circuit diagram of a preferred embodiment of my invention as applied to half wave thyratron rectifier power supply.

Referring now to the drawing and more particularly to Figure 1, a typical characteristic curve of a thyratron tube is shown, where E_p is the plate potential presumed to be a sine wave and E_g the grid bias (positive above and negative below the horizontal axis) that will just allow the tube to fire at the corresponding value of E_p. V_g is a sine wave of grid voltage (V_g need not be a sine wave or of the same frequency as E_p). The tube will fire at the earliest point in the cycle at which V_g intersects E_g, in this figure point P. That portion of the E_p curve beginning at a point corresponding with point P and set off by shading lines represents the conduction period of thyratron. As V_g is shifted along the horizontal axis so that it falls in and out of phase with E_p, the position of P, and therefore the average current flow, is correspondingly varied. When the grid and plate voltage are out of phase no current flows. If the grid voltage is advanced current flows during part of the cycle and by advancing the grid voltage until it is in phase with the anode voltage the current can be made to flow during the entire half cycle.

The phase of V_g in respect to E_p, and consequently the firing point, may be adjusted in a thyratron circuit by means of conventional phase shifting networks comprising known combinations of resistance, capacitance, or inductance. The firing point may also be adjusted by combining a direct current with V_g thereby laterally shifting the position of V_g from the horizontal axis. V_g' illustrates the algebraic sum of V_g and a direct current of fixed amplitude, and it will be seen that the intersection of V_g' and E_g now falls at point P_1. Thus by varying the amplitude of the direct current the firing time of the thyratron may be correspondingly varied.

In the present invention the output of a thyratron rectifier is stabilized by imposing a varying direct current over the alternating current grid voltage, the amplitude of the direct current being a function of the rectifier output of the thyratron. Accordingly, variations in the thyratron output cause corresponding variations in the direct current applied to the control grid of said thyratron, thereby altering the grid and anode voltages to a degree compensating for the thyratron output fluctuations.

Referring now to Figure 2, a preferred embodiment of this invention is shown as applied to a simple half-wave thyratron rectifier power supply.

A step-up power transformer 10 is provided having its primary winding 11 connected across the A.-C. line. A thyratron rectifier tube 12 is provided having its anode connected to one side of the high voltage secondary winding 13 of transformer 10, the other side of winding 13 being connected to ground. A second secondary 14 is connected on one side through condenser 15 to the cathode of thyratron 12. Shunted across secondary 14 is a phase shifting network having a condenser 16 in series with a resistor 17. The juncture of the phase shifting network is connected to the grid of thyratron 12 through a current limiting resistor 18. This RC phase shifting network is one type of phase-shifting circuit, which may be used to secure the desired phase relation between the plate and grid voltages.

The wave ripples of the thyratron 12 output are smoothed out by means of a resistance-capacitance filter consisting of resistor 19 and condenser 20. Shunted across condenser 20 is a bleeder resistor 21. The output of the power supply is obtained at the bleeder terminals.

The electronic voltage stabilizer for regulating the output of the power supply is in the form of a direct current vacuum tube amplifier including a screen grid tube 22 having a source of anode voltage obtained from diode rectifier 23. Diode 23 is connected with its plate to the same secondary winding 13 feeding thyratron 12, while its cathode is connected to the plate of tetrode 22 through resistor 24. The diode 23 output is filtered by a grounded capacitor 25.

The control and screen grid voltages of tetrode 22 are secured from the output of the thyratron power supply. The screen grid is connected to the positive bus 32 through a rheostat 30, while the control grid is grounded through resistances 26 and 27. The latter is connected to rheostat 30 through a voltage regulator tube 29. The cathode of tetrode 22 is connected to ground through a voltage regulator tube 26 which serves to maintain the cathode voltage constant.

The plate of tetrode 22 is connected to the grid circuit of thyratron 12 by a conductor 40. Looking at condenser 15, which is in series with the A.-C. grid bias of thyratron 12, it will be seen that the voltage developed between ground and the anode of tetrode 22 is applied across condenser 15 in series opposition with the voltage developed between ground and the cathode of thyratron 12. The voltage appearing across the anode circuit of tetrode 22 is such that it can exceed that across bleeder 21 so that the resultant D.-C. voltage applied to the grid of thyratron 12 may be positive or negative with respect to its cathode. Thus the A.-C. component of the grid bias may be shifted vertically in either direction with respect to its zero axis, as indicated in Fig. 1 by the double headed arrow 42, the shift in the positive direction being illustrated by a wave V_g'.

The operation of the regulated rectifier circuit is as follows: The cathode-anode potential for the rectifier is furnished by the secondary 13, the circuit being grounded secondary 13, the plate of triode 12, the cathode of triode 12, resistance 19, condenser 20 to ground; in addition to condenser 20 there are three parallel paths which are: first, resistance 21; second, rheostat 30, regulator tube 29, and resistance 27, and the third path is through the load connected across the terminals 32 and 36. The main current is carried ordinarily by the load. Resistance 19 has two functions: one of filtering the output, and the other, to limit the peak current of the rectifier to safe value. Resistance 19 may be substituted with an inductance, such as a choke coil with iron core; the latter preferably should be shunted with a resistor to prevent the possibility of shock excited oscillations which are apt to take place because of the relatively steep wave front of the wave appearing in the rectifier output. Resistance 21 is a bleeder resistor which shunts condenser 20 and thus provides a shunting path for this filter condenser. The second parallel path which includes rheostat 30, voltage regulator tube 29 and resistance 27, provides the necessary grid potentials for tetrode 22, the screen grid being connected to the junction point between tube 29 and rheostat 30. Thus the potential impressed on the screen grid is determined by the voltage drop across resistance 27 and tube 29; this potential can be adjusted by vary-

ing rheostat 30. Since fairly large fluctuations of the screen grid potential have a relatively limited effect on the behaviour of tetrode 22, it may be assumed that the screen grid potential remains practically constant; this is especially so in view of the regulating action exerted upon the rectifier circuit by tetrode 22. The control grid of tetrode 22 is connected through the grid resistor 28 to the junction point between tube 29 and resistance 27, and therefore the potential of this grid with respect to the cathode will be determined primarily by the IR drop appearing across resistance 27. The voltage regulator tube 29 is inserted between the resistances 27 and 30 for reducing the positive potential impressed on the control grid of tetrode 22 to the value that will give proper operation of tetrode 22. The entire circuit including resistance 27, tube 29, and rheostat 30 may be considered as a voltage divider with the signal impressed on the control grid of tetrode 22 being determined by the ratio of the resistance of rheostat 30 to that of resistance 27, the regulator tube 29 merely acting as a device which reduces the positive voltage impressed on the control grid of tetrode 22 to the desired extent without further reducing the load voltage fluctuations. Condenser 36 and resistance 28 comprise a condenser-resistance filter which prevents the pronounced ripple appearing in the output of triode 12 to have any effect on the regulating action of tetrode 22. Therefore the parameters of this filter must be adjusted so that its time constant is relatively large as compared to the period of the ripple, and relatively short as compared to the voltage fluctuations which are apt to take place because of any changes in the impedance of load 31 and any voltage fluctuations across the primary 11.

Since resistor 27 is connected in a circuit between ground and the positive bus 32, the flow of current through resistance 27 will make the control grid of tetrode 22 positive with respect to ground. If the cathode of tetrode 22 were connected directly to ground, tetrode 22 would operate on the upper portion of its characteristic because of positive grid bias, and since this is an undesirable mode of operation it becomes necessary to raise the potential of the cathode above ground to that point which would enable one to operate tetrode 22 with the grid signal with respect to the cathode varying approximately between zero grid potential and the cut-off potential. To accomplish this, a voltage regulator tube 26 is connected between ground and the cathode of tetrode 22, the constant voltage drop across this tube raising the potential of the cathode above ground to establish the above-mentioned mode of operation of this tetrode. It is to be noted that by using a voltage regulator tube rather than a resistance in the cathode circuit, the usual degenerating effect due to the cathode resistance, is eliminated. The anode of tetrode 22 obtains its necessary positive potential from the secondary winding 13 of transformer 10 to which it is connected through diode 23 and resistance 24; this potential is made substantially constant by a relatively large condenser 25 connected between ground and the cathode of triode 23 which filters the rectified output of the diode.

The useful varying D.-C. control voltage appearing at the junction point 38 in the output of tetrode 22 is conveyed to the grid of triode 12 over conductor 40, the secondary 14, and the resistances 17 and 18, where it is combined with the alternating current potential impressed on the same grid by the phase shifter 16—17 connected across the secondary 14. The grid resistor 18 performs an important function of protecting triode 12 against excessive grid currents during the positive excursion of its grid during the positive portion of the alternating current wave impressed upon this grid by the phase shifter. However, the more important function of resistance 18 is to prevent a large flow of unidirectional current, during the same positive grid excursion, from the grid through resistance 18, resistance 17, secondary 14, conductor 40, junction point 38, resistance 24, diode 23, secondary 13 to ground, through the grounded resistance 21, resistance 19 and to the cathode of thyratron 12. This path links thyratron 12 to the plate of tetrode 22 at the junction point 38; the flow of such parasitic current through the plate resistor 24—if allowed—would exert detrimental effect on the normal voltage regulating function of tetrode 22 by lowering its plate potential. It may be noted here that resistance 18 may be made very high without paralyzing triode 12 since resistance 18 carries no current up to the moment of firing triode 12; thus, preceding ionization, the grid of triode 12 controls the instant of ionization of triode 12.

The grid of triode 12 is also coupled to its cathode by condenser 15; the function performed by condenser 15 is as follows: if transients or any other disturbances appear in the output circuit of the rectifier, they will be transmitted to the cathode of triode 12 over bus 32, and if there were no condenser 15 in the circuit, these transients would appear only on the cathode, and the potential of the grid during these transients would have been determined solely by the potentials impressed upon it by tetrode 22 and secondary 14. Since these potentials would not be under the influence of the transients, large differences of potential would be created between the grid and the cathode, and these would vary the time of ionization of triode 12. In order to prevent such detrimental effect of transients on the operation of triode 12, condenser 15 is inserted between the cathode and the grid which transmits all these transients to the grid through condenser 16, the secondary 14, and resistances 17 and 18, thus raising or lowering the potential of the grid in synchronism and in phase with the lowering or raising of the cathode potential, which prevents the abnormal firing of the triode by the transients.

It may be noted here parenthetically that condenser 15 will also transmit the same transients to the plate of tetrode 22. However this will have only negligible effect on the normal functioning of tetrode 22 because of the protective action exerted by the screen grid of the latter.

Summarizing the functioning of the rectifier circuit, two alternating current potentials appear across the secondaries 13 and 14; the alternating current potential appearing across the secondary 13 is impressed on the anodes of thyratron 12 and tetrode 22, the potential appearing at the anode of tetrode 22 being a filtered D.-C. potential necessary for operation of this tetrode. The alternating current potential appearing across the secondary 14 is shifted in phase by the phase shifter 16—17, and is impressed on the grid of triode 12 approximately 60° to 90° lagging behind the potential impressed on the plate of this triode. When the grid potential reaches the firing point P illustrated in Fig. 1, triode 12 becomes conductive and delivers a positive pulse at the cathode of this triode illustrated by the

cross-hatched portion of the voltage wave E_p. This series of pulses is filtered by the condenser 20 and resistance or inductance 19 with the result that a sufficiently constant D.-C. potential appears across the terminals 32 and 34 of the rectifier. This potential controls the degree of conductivity of tetrode 22 through the previously described action of the potentiometer circuit including resistances 27 and 30, and tube 29. The output of tetrode 22 controls the D.-C. biasing potential impressed on the grid of triode 12. If the impedance of the load connected across the terminals 32 and 34 is lowered to such an extent that the voltage appearing across these terminals is lowered, there is a corresponding instantaneous lowering of the potentials impressed on the control and screen grids of tetrode 22 with the concomitant lowering of the conductivity of the latter. It should be noted that the anode of this tetrode is connected to an independent source of positive potential furnished by the secondary winding 18 so that any fluctuation in the output circuit of the rectifier does not affect the plate potential of tetrode 22. The previously mentioned lowering of the conductivity of tetrode 22 therefore immediately results in the raising of the potential of the junction point 38, and this rise in potential is at once transmitted through the secondary 16 and resistances 17 and 18 to the grid of triode 12. This in turn produces the previously mentioned shifting of the firing point of tetrode 12 from point P to point P_1 illustrated in Fig. 1 with the result that triode 12 becomes conductive at the earlier portion of the positive cycle of voltage E_p impressed on the plate of this triode. Such earlier firing of the triode compensates the voltage drop appearing across the rectifier terminals 32 and 34 due to the decrease in impedance of load 31 with the result that the potential appearing across these terminals remains substantially constant irrespective of the fluctuations in the impedance of the connected load.

The same type of action will take place when there is a fluctuation in the source of voltage connected to the primary 11, the rise in this voltage exhibiting itself as a positive signal on the control and screen grids of tetrode 22, and as an increase in the negative D.-C. signal on the grid of triode 12. Due to the amplification furnished by tetrode 22 this action will occur in spite of the slight rise in the plate voltages furnished to the tetrode 22 and triode 12.

From the description of the functioning of the rectifier circuit it follows that the degree of regulation may be controlled by varying the setting of rheostat 30. Moreover, rheostat 30 may be used also for varying to a very large extent the potential appearing across the D.-C. busses 32—34. Thus in one embodiment of the invention the D.-C. voltage was varied between 500 and 300 volts by varying the setting of rheostat 30.

While the invention has been disclosed with a tetrode tube used as the D.-C. amplifier 22, equally good results may be obtained with a pentode. A triode may be also used for accomplishing the sought result but it is not recommended since triodes would be more affected by any voltage fluctuations appearing at the junction point 38.

The use of the term "gas-filled triode" includes the three element gas discharge tubes which use gas, or mercury vapor, or a mixture of gases as an ionizable medium.

While the operation of the electronic stabilizer hereinabove described has been illustrated in connection with thyratrons of the triode type, it may be applied with equal effectiveness to the multi-grid thyratrons. Moreover, the stabilizer circuit is not limited in its application to half-wave rectifiers but may be employed successfully in association with full-wave and multi-phase rectifier circuits. It is obvious, of course, that the problem of filtering is greatly simplified as more rectifier tubes are used.

While there has been described what is at present considered a preferred embodiment of the invention, it will be obvious to those skilled in the art that various changes and modifications may be made therein without departing from the invention, and it is, therefore, aimed in the appended claims to cover all such changes and modifications as fall within the true spirit and scope of the invention.

We claim:

1. In a regulated power system, the combination comprising a source of alternating-current, a gas-filled rectifier having a cathode, an anode, and a control electrode, the plate-cathode circuit of said rectifier being coupled to said source, means for impressing the alternating voltage from said source on said control electrode and said cathode in displaced phase relationship with respect to the voltage impressed on said anode whereby said rectifier normally is fired at a predetermined point on the positive portion of said alternating voltage, a direct-current amplifier having its input circuit connected to and controlled only by the output circuit of said rectifier in a manner whereby a regulating voltage is established in the output circuit of said amplifier substantially proportional to the direct component of the output voltage of said rectifier, but varying in opposite sense to the variations of said direct component, means for impressing said regulating voltage on said control electrode, and a condenser interconnecting the cathode and the grid of said rectifier for creating a varying potential difference between said control electrode and said cathode equal to the difference between said regulating voltage and the direct component of said output voltage, the variation in said difference advancing or retarding said firing point to a degree substantially compensating for fluctuations in said direct component of said output voltage.

2. In a regulated power system, the combination comprising a source of alternating current, a gas-filled rectifier having a cathode, an anode, and a grid, the plate-cathode circuit of said rectifier being coupled to said source, means for impressing the alternating voltage from said source on the grid circuit of said rectifier in displaced phase relationship with respect to the voltage impressed on said plate whereby said rectifier normally is fired at a predetermined point on the positive portion of said alternating voltage impressed on said plate, a filter circuit connected to the output of said rectifier, a load circuit connected to said filter circuit, said filter impressing a unidirectional potential on said load, a direct current amplifier including a vacuum tube having its control means connected only to said filter circuit in a manner whereby a regulating direct current voltage is established in the plate circuit of said amplifier, the amplitude variations of said regulating voltage being greater than and in opposite sense to the corresponding amplitude variations of said unidirectional potential, means for impressing said regulating voltage on said control electrode, and a condenser interconnecting the cath-

ode and the grid of said rectifier for creating a varying potential difference between said control electrode and said cathode equal to the difference between said regulating voltage and said unidirectional potential, the variation in said difference advancing or retarding said firing point to a degree substantially compensating for fluctuations in said direct component of said output voltage.

3. In a regulated power system, the combination comprising a source of alternating current, a transformer including a primary and first and second secondaries, said primary being connected to said source, a rectifier having a cathode, an anode and a control grid, the cathode-anode circuit of said rectifier being connected to said first secondary for rectifying the output thereof, a serially connected resistance-capacitance phase shifting network connected across said second secondary, the junction point between said capacitance and said resistance being resistively coupled to the control grid of said rectifier, a condenser connecting the junction point between said secondary and said network to the cathode of said rectifier, whereby the grid and the plate voltages on said rectifier are in displaced phase relation, a direct current amplifier including a tetrode having its grid and screen grid elements connected to the output circuit of said rectifier, whereby a varying control voltage is established in the plate circuit of said amplifier proportional to the output voltage of said rectifier but having the amplitude variations greater than and in opposite sense to the corresponding amplitude variations in the output voltage of said rectifier, and a connection between the plate circuit of said amplifier and said condenser for applying said control voltage to said control grid for advancing or retarding said firing point to a degree substantially compensating for fluctuations in said output voltage.

4. In a rectifier circuit, a source of alternating current, a direct current load circuit, a gas-filled rectifier having a cathode, an anode, and a grid, means for connecting said rectifier between said source and said load circuit to supply said load circuit with rectified voltage and current, means for impressing alternating voltage on said grid from said source in lagging relationship with respect to the alternating voltage impressed by said source on the cathode-anode circuit of said rectifier whereby said rectifier is rendered conductive only during a portion of the positive half-cycle impressed on said anode, means connected to and controlled by said load circuit, said means impressing a varying direct current bias on said grid, having amplitude variations greater than and in opposite sense to the variations of said load voltage and a cathode-grid connection for superimposing on the alternating potential of said grid a potential difference equal to the difference between said varying direct current bias and said rectified voltage, said connection and said last means maintaining said load voltage substantially constant by varying the duration of the conductive state of said rectifier during said positive half-cycle.

5. In a regulated power system, a source of alternating current, a gas-filled rectifier having a cathode, an anode, and a grid, a direct current load circuit, first means for connecting said rectifier between said source and said circuit to supply said circuit with unidirectional potential, second means for impressing alternating voltage on said grid from said source in lagging relationship with respect to the alternating voltage impressed by said source on the cathode-

anode circuit of said rectifier, whereby said rectifier is rendered conductive only during a portion of the positive half-cycle impressed on said cathode and said anode, a direct current amplifier connected to and controlled solely by said load circuit for establishing in the output circuit of said amplifier a regulating direct voltage substantially proportional to said unidirectional potential, the amplitude variations of said regulating voltage being greater than and in opposite sense to the variations of said unidirectional potential, a connection between the output circuit of said amplifier and said grid for impressing said regulating direct voltage on the grid of said rectifier whereby the firing point of said thyratron is advanced or retarded along the positive portion of the alternating voltage impressed on the cathode-anode circuit of said thyratron to a degree compensating for fluctuations in said unidirectional potential with the variations in impedance of said load circuit, and a capacitive connection between said grid and cathode for transmitting the cathode potential fluctuations to said grid.

6. A regulated rectifier circuit including, a source of alternating current, a direct current load circuit, a gas-filled rectifier having a cathode, an anode, and a grid, a transformer having a primary and first and second secondaries, said primary being connected to said source, said first secondary being connected to the anode-cathode circuit of said rectifier to supply said load circuit with rectified voltage and current, a phase-shifter connected across said second secondary, the grid of said rectifier being resistively connected to said phase shifter, a condenser connected between the cathode of said rectifier and said second secondary, a direct current amplifier connected to and controlled solely by said load circuit, and a connection between the output circuit of said amplifier and the junction point between said second secondary and said condenser, said amplifier biasing said rectifier to maintain said rectified voltage substantially constant irrespective of the fluctuations in the impedance of said load circuit and voltage fluctuations in said source.

7. A rectifier circuit as defined in claim 6 which also includes a unidirectional direct current connection between said first secondary and the output circuit of said direct current amplifier, said direct current connection furnishing the cathode-anode potential for said amplifier.

8. A rectifier circuit as defined in claim 6 which also includes a rheostat in the connection between the input circuit of said direct current amplifier and said load circuit for controlling the degree of regulation of said rectified voltage maintained by said amplifier, and for adjusting the magnitude of said rectified voltage.

9. A rectifier circuit as defined in claim 6 in which the cathode-anode voltage for said direct current amplifier is furnished by said first secondary whereby the conductivity of said direct current amplifier is controlled solely by the voltage fluctuations appearing across said load circuit.

10. A rectifier circuit as defined in claim 6 in which said direct current amplifier includes a series circuit of a grounded resistance, a voltage regulator tube, and a rheostat connected to the positive output terminal of said rectifier circuit, a multigrid vacuum tube having a cathode, an anode, and a plurality of grids, the control grid of said vacuum tube being connected through a resistance to the junction point between said

grounded resistance and said voltage regulator tube, and the screen grid of said vacuum tube being connected to the junction point between said voltage regulator tube and said rheostat, a voltage regulator tube between ground and the cathode of said vacuum tube, a filtering condenser connected to the control grid of said vacuum tube, and a unidirectional direct current connection between the anode of said vacuum tube and said first secondary.

DONALD R. GIBBONS.
HARRY L. CHANEY.

REFERENCES CITED

The following references are of record in the file of this patent:

UNITED STATES PATENTS

Number	Name	Date
2,113,220	Power	Apr. 5, 1938
2,195,121	Moyer	Mar. 26, 1940
2,276,650	Gulliksen	Mar. 17, 1942
2,373,759	Faulkner	Apr. 17, 1945