(No Model.) 3 Sheets—Sheet 1.

G. T. WINNARD & J. BEDFORD.

PULLEY BLOCK.

No. 590,250. Patented Sept. 21, 1897.

FIG. 1

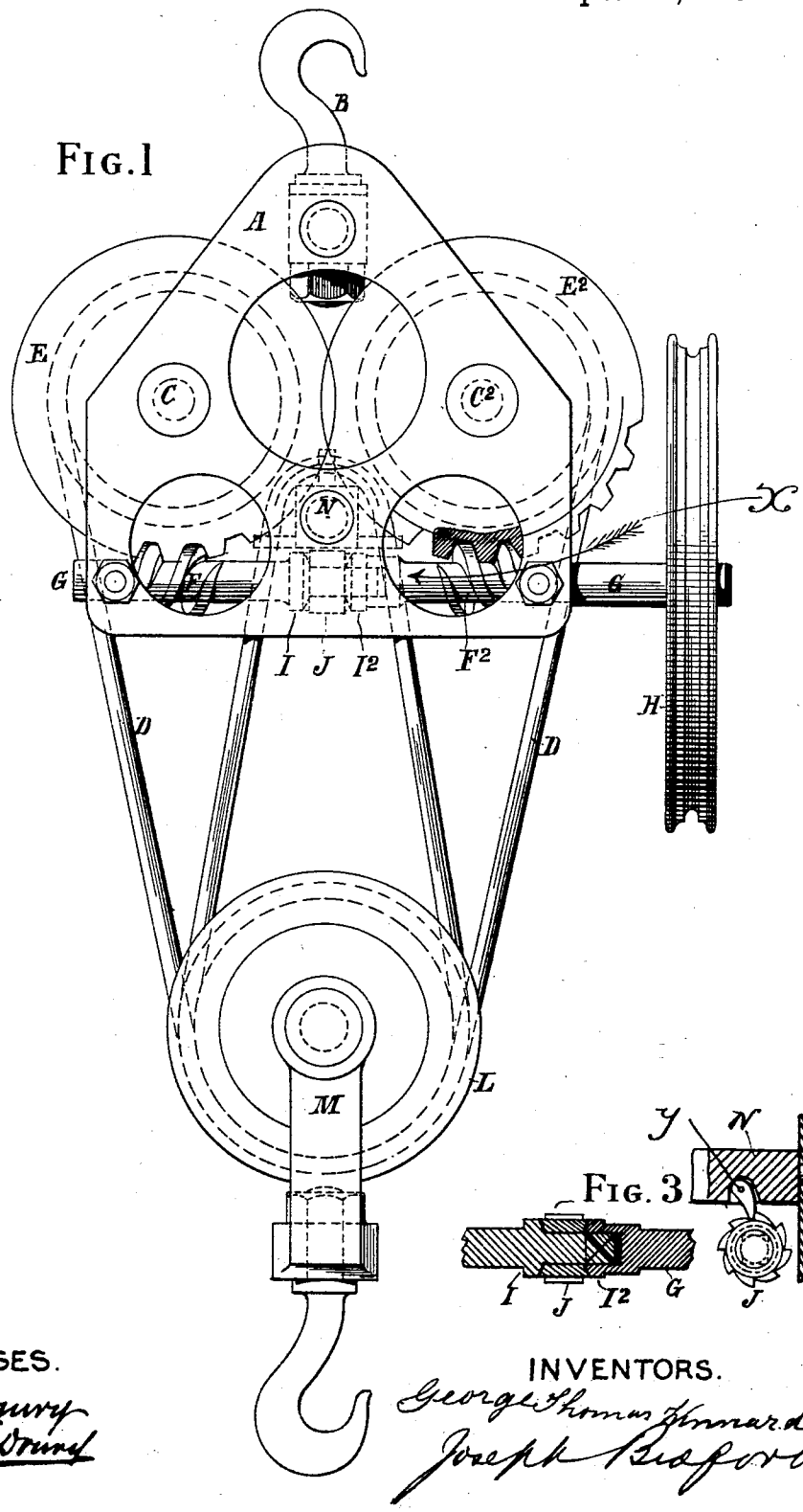

FIG. 3

WITNESSES.

Robt. F. Drury

Bernard E. Drury

INVENTORS.

George Thomas Winnard

Joseph Bedford

THE NORRIS PETERS CO., PHOTO-LITHO., WASHINGTON, D. C.

(No Model.) 3 Sheets—Sheet 2.

G. T. WINNARD & J. BEDFORD.

PULLEY BLOCK.

No. 590,250. Patented Sept. 21, 1897.

FIG. 2.

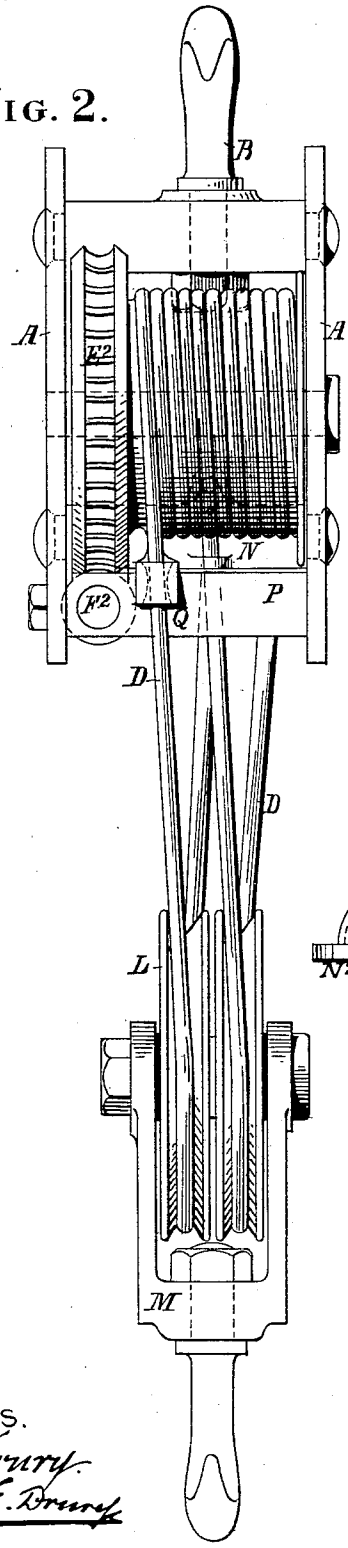

FIG. 4.

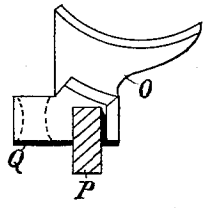

FIG. 5.

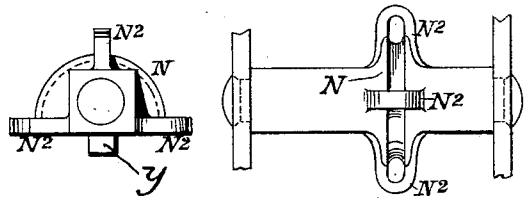

WITNESSES.

Robt. F. Drury.

Edward E. Drury.

INVENTORS.

George Thomas Winnard.

Joseph Bedford.

THE NORRIS PETERS CO., PHOTO-LITHO., WASHINGTON, D. C.

(No Model.) 3 Sheets—Sheet 3.

G. T. WINNARD & J. BEDFORD.

PULLEY BLOCK.

No. 590,250. Patented Sept. 21, 1897.

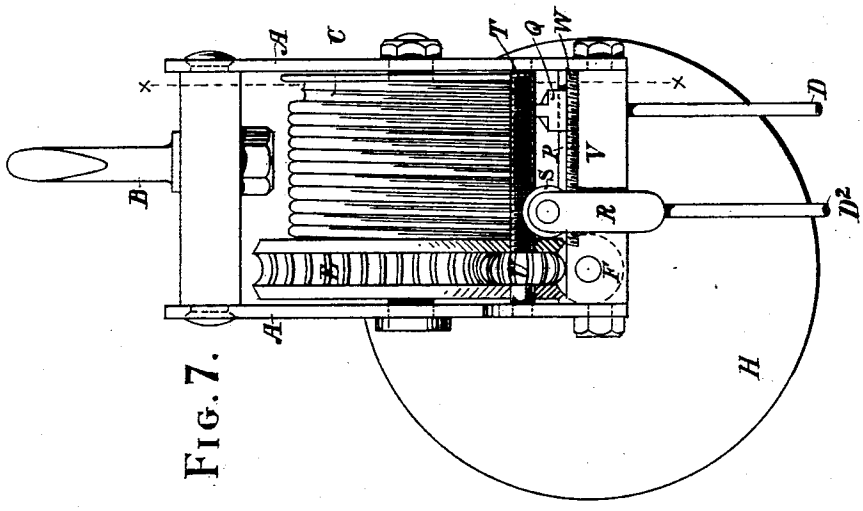

FIG. 7.

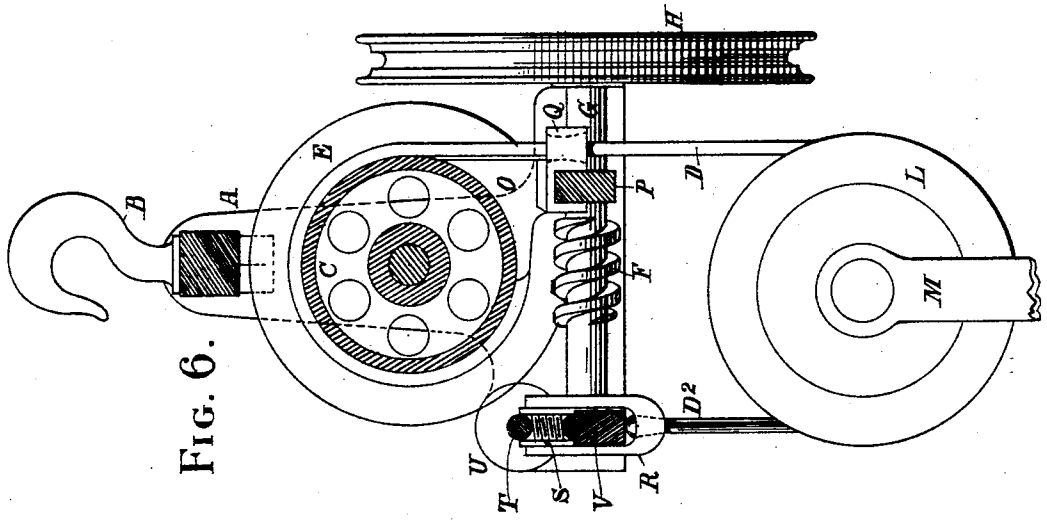

FIG. 6.

WITNESSES.

Robt. F. Drury,
Bernard E. Drury

INVENTORS.

George Thomas Winnard
Joseph Bedford

THE NORRIS PETERS CO., PHOTO-LITHO., WASHINGTON, D. C.

UNITED STATES PATENT OFFICE.

GEORGE THOMAS WINNARD AND JOSEPH BEDFORD, OF SHEFFIELD, ENGLAND.

PULLEY-BLOCK.

SPECIFICATION forming part of Letters Patent No. 590,250, dated September 21, 1897.

Application filed August 31, 1896. Serial No. 604,432. (No model.) Patented in England April 15, 1896, No. 7,922.

To all whom it may concern:

Be it known that we, GEORGE THOMAS WINNARD and JOSEPH BEDFORD, subjects of the Queen of Great Britain, residing at Sheffield, in the county of York, England, have invented certain new and useful Improvements in Pulley-Blocks, (for which we have obtained a patent in Great Britain, No. 7,922, dated April 15, 1896;) and we do hereby declare that the following is a full, clear, and exact description thereof, reference being had to the accompanying drawings, which form a part of this specification.

The object of the invention is to enable heavy weights to be lifted with comparative ease and to retain the equilibrium of the block.

In the annexed drawings we have illustrated both a single and double sheave-block made upon our improved method, like letters of reference indicating like parts in all of the figures.

Figure 1 is a side elevation of a double block; Fig. 2, front elevation of same with chain-wheel omitted; Fig. 3, longitudinal section and end view of brake; Fig. 4, side view of guide; Fig. 5, two views of support for central loop; Fig. 6, side elevation of single block, partly in section, through the line xx in Fig. 7; Fig. 7, front elevation of single block.

These blocks are specially designed for the use of steel-wire rope; but hempen rope or chain may be substituted, if desired.

In carrying out our invention in the construction of a double block, as shown in Figs. 1 and 2, we make a frame consisting of two side plates A with the necessary bolts and suspending-hook B, and between the side plates we support two winding-drums C and C^2, each drum having a continuous groove to receive the coils or a wire rope D. Each drum is provided with a worm-wheel E and E^2, which may gear into each other or not, as preferred, and each worm-wheel gears into corresponding worms F and F^2, located underneath upon a two-part axle or shaft G, which also carries the usual wheel H and loop-chain (not shown) by which the block is operated. A second wheel and loop-chain may be applied to the opposite end of the shaft G, if desired. One of the worms and its worm-wheel is made right hand and the other left hand, and the two-part axle G is divided between the worms, the end of one axle being made square (by preference) and fitting into the recessed end of the other part in such a manner as to permit a short longitudinal movement while transmitting rotary motion. This arrangement is shown in Fig. 3, and, as hereinafter described, it forms an automatic brake which comes into action when lowering, automatically regulating its resistance to the weight of the suspended load. This is due to the fact that in lowering the tendency of the weight of the load, acting through the pulleys and worm-wheel, is to force the worms toward each other, thus creating frictional resistances between the cone-surfaces. For instance, supposing the load is lowering, the pulley E^2 will turn in the direction of the arrow X, Fig. 1, and the teeth of the worm-wheel moving longitudinally of the worm will force it inward.

A collar I and I^2 is made upon each part of the shaft, and coned upon their opposing sides and between the said cones where the shaft is round is placed a ratchet-wheel J, (see Fig. 3,) correspondingly coned on each side and engaging with a pawl carried by the block-frame N, as at y, Figs. 3 and 5.

When the blocks are lifting, the tendency of the worm-wheels is to draw the worms and the cones together and the pawl slips over the teeth of the ratchet-wheel as it revolves; but when lowering the ratchet-wheel is held by the pawl, automatically setting up a frictional brake action in proportion to the weight being lowered. A single length of wire rope D is secured by one end to one of the drums. It is then passed under one of the sheave-pulleys L of the hanging block M, carried up to the suspended block and over the loop-support N, then down and under the other sheave-pulley and so up to the opposite drum, to which it is secured. It will thus be seen that the hanging block M is always suspended centrally in a double loop of the wire rope D.

To guide the wire ropes and keep them in the spiral grooves upon the drums, especially necessary when the block is pulling at an angle, we use a traveling guide O, (see Fig. 4,) the curved edge of which fits into the groove of the drum next to the rope. It is provided

with a sliding groove which fits upon a cross-bar P, carried between the side plates A, and also with an internally-flaring thimble Q, through which the rope D passes and which prevents it from being pulled out of the groove.

The central loop of the rope or chain is carried by a loop-support N, (see Fig. 5,) and its position is indicated by dotted lines in Fig. 1. It is supported by the side plates A and is provided with a semicircular groove to receive the rope and with guides N^2.

In the single block, as illustrated in Figs. 6 and 7, there is only one grooved winding-drum C, with its worm-wheel E and worm F, and the hanging block M has only one sheave L. The perfect equilibrium and vertical action of this block is maintained by the fall end of the rope D^2 being caused to travel in the opposite direction to and at the same speed as the rope D as it is wound on or off the spiral groove of the drum. To accomplish this, the end of the rope at D^2 is secured to a traveling link R, carried by a worm-wheel S, resting upon a bar V. The worm gears into the threads of a screw T, upon the end of which is a pinion U, gearing into and driven by the worm-wheel E. The rounded top edge of the bar V may be also threaded or toothed as a rack W to engage with the worm S, if desired, but not of necessity.

It is to be understood that the worm-wheels E and the pinion U are completely toothed, although such teeth are not shown in the drawings.

Having now fully described our invention, what we desire to claim and secure by Letters Patent is—

1. In combination with the pulley having the spiral groove, the guide-rail P adjacent thereto, the guide for the rope resting on the said rail, and the projection O on the guide extending therefrom and fitting into the groove of the pulley, said projection having a segmental bearing edge to contact with the pulley and being of such width as to fit into one groove and extending around a limited part of the under surface thereof, substantially as described.

2. In a lifting-block having a winding-drum and a worm-wheel, a worm-shaft made in two parts, so connected as to permit longitudinal action while transmitting rotary motion, provided with a ratchet-wheel fixed loosely upon the shaft between the two parts, and so constructed that it is carried round by friction when the block is lifting, and held stationary when lowering, as hereinbefore described for the purpose specified.

3. In a lifting-block the combination of a winding-drum, a traveling link R for supporting one end of the rope, or chain, a worm-wheel S carried by the link, a screw operated by the movement of the pulley, the connection between the screw and the pulley, means for supporting the screw and means for supporting the link, substantially as described.

4. In combination, in a lifting pulley-block, a frame, a pulley therein, a movable support for holding one end of the rope or chain to the pulley-block and operating connections between the movable support and the pulley whereby the point of suspension of the end of the rope or chain is changed automatically as the rope is wound or unwound, substantially as described.

In testimony that we claim the foregoing as our own we have affixed hereto our signatures, in presence of two witnesses, this 17th day of August, 1896.

GEORGE THOMAS WINNARD.
JOSEPH BEDFORD.

Witnesses:
ROBT. F. DRURY,
ENSOR. D. DRURY.