July 26, 1966 R. B. STAVER 3,262,421

SHAPED CAKE OF MATERIAL WITH HANDLE ATTACHED

Filed Aug. 12, 1963

Fig. 1

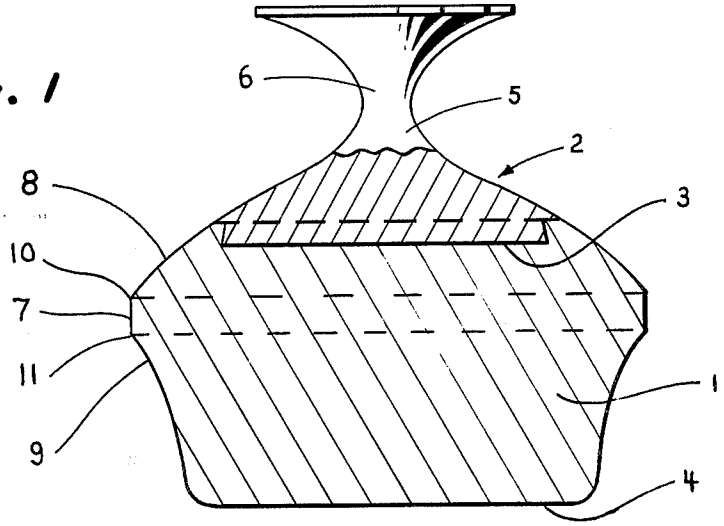

Fig. 2

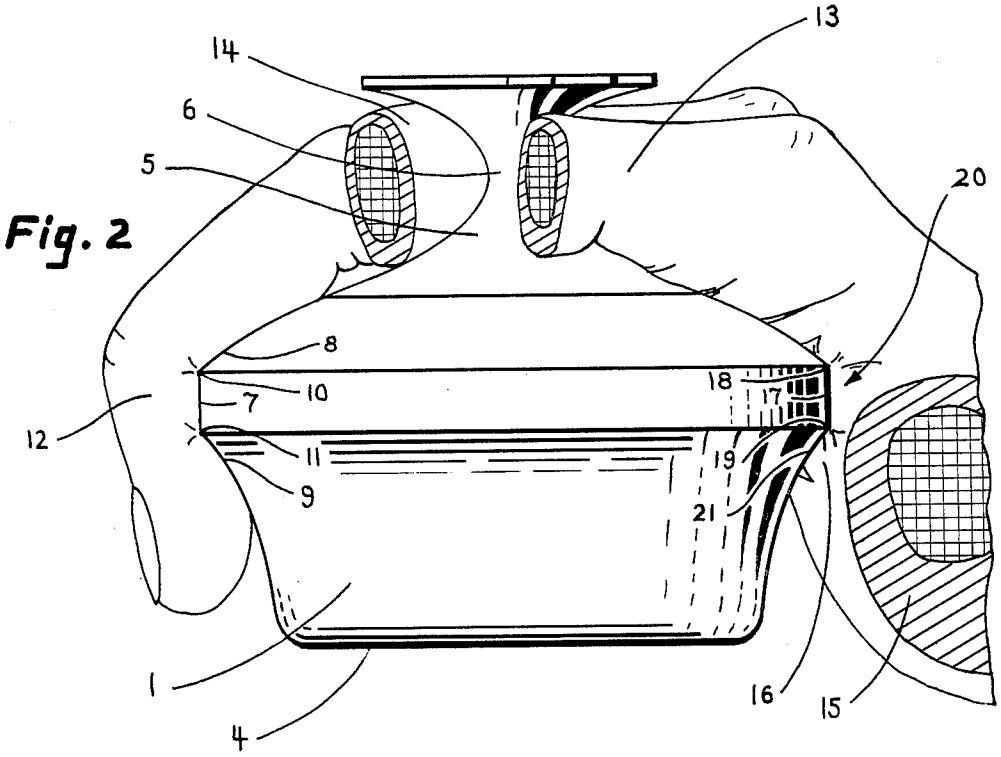

— ROBERT B. STAVER —
INVENTOR.

BY Fleht & Swain

United States Patent Office 3,262,421 Patented July 26, 1966

3,262,421

SHAPED CAKE OF MATERIAL WITH HANDLE ATTACHED

Robert B. Staver, 191 Hillview Ave., Los Altos, Calif.

Filed Aug. 12, 1963, Ser. No. 301,537
6 Claims. (Cl. 118—76)

This invention relates generally to a handle attached to a shaped body of material of the type which is eroded in use, and more particularly to a handle attached to a body of soap.

In my copending application Serial No. 804,283, filed April 6, 1959, entitled "Cake of Material and Handle," now Patent No. 3,100,363 there is described a body of material, for example a cake of soap, which is adapted to operate on an object to be treated. The body of material is attached to a member which may be adapted to be held by the hand, said member being attached to the upper surface of said body, the opposed lower surface of the body being adapted for use in cooperation with an object being treated. The member includes a holding means portion which extends generally upwardly in a direction away from the body of material. Said holding means includes a slender stem portion which is made so that it can be held comfortably in the crotch between two adjacent fingers. Usually the upper end of the holding means includes a head portion which facilitates holding by the hand and supporting of the article. In use, the body of material is generally held with the stem comfortably nested in the crotch between two adjacent fingers. The surface of the body of material adjacent to said member may rest against the under surface of the fingers and the palm of the hand. The ends of the fingers may curve over the outer edge of the article in a comfortable manner.

When the body of material is erodable and especially when it contains any material which becomes slippery in use, such as soap, it is sometimes desirable that the outer configuration of the body of material be such as to provide good auxiliary gripping by the hand. When made up of soap in an average size for bathing use, the user usually can curl or hook his third and fourth fingers over the outer peripheral rim of the body if such a rim is present. And sometimes the end of the second finger may also be hooked over this rim. Experience shows that this auxiliary gripping is helpful to most users of the article described when the body of material is new or nearly new, since that is when it is largest and tends to be most unwieldly. However, bodies of erodable material of previous design have not provided the most efficient gripping configuration for this outer rim.

It is an object of this invention to provide an improved design for the outer peripheral region of the erodable rim of such an object as hereabove described whose body includes erodable material, and especially for a material that becomes slippery in use such as soap, so that it can be held more efficiently, more effectively, and more easily when new and during the early period of use.

Referring to the drawing:

FIGURE 1 is a front elevation view in partial cross-section showing a body of erodable material with a member attached to one side (upper) and the opposite side adapted for cooperation with an object to be treated, which view shows an outer rim to the body of material of new, improved design having two non-tangential, horizontal edge-lines of intersection according to the invention.

FIGURE 2 is an elevation view of the same article as depicted in FIGURE 1 showing how the third finger and the fleshy part of the palm of the hand, which hold the article in the intended way, can gain an improved grip over a rim such as described and as here depicted.

Referring to FIGURE 1, the body of erodable material 1, which may for example be soap, has a member attached to its upper surface portion 3, which member is generally designated by the number 2, said member having a holding means portion 5 with an upwardly extending stem portion 6, said stem being sufficiently slender to be positioned in the crotch of two adjacent squeezing fingers of a hand without spreading said fingers to an uncomfortable degree, said body of material having an opposed (lower) surface 4 adapted for cooperation with an object to be treated. The body of material has a peripheral rim 7 which is here shown to be straight in outer profile and which is joined to the contiguous surfaces 8 above and 9 below non-tangentially by the edge-lines of intersection 10 and 11 respectively. It should be noted that these lines of intersection are markedly non-tangential so as to provide protruding edge-line portions of the body of material 1, which increase the ability of the fingers of the hand to obtain better purchase on the body of material, which may be explained partly by increased friction between the fingers and the region of the body-rim and by improved locking of the fingers around this double-edged rim. Improved locking results from better purchase of the fingers over the improved configuration of the protruding rim, which also provides better frictional resistance than a rounded corner.

In FIGURE 2 we have an enlarged elevation view showing a similar article as depicted in FIGURE 1 held by the hand. The body of material 1 has a peripheral rim 7 which is joined to the contiguous surfaces 8 above and 9 below non-tangentially at the edge-lines of intersection 10 and 11 respectively. Again it should be noted that these two junctures are markedly non-tangential so as to provide protruding edge-line portions of the body of material so as to improve gripping by the fingers of the hand. The third finger 12 of a hand is shown in an approximately normal gripping position when the stem 6 of the holding means 5 is nested in the crotch between the first finger 13 and the second finger 14, with the hand holding the article in the preferred way. (Parts of the first finger 13 and the second finger 14 are cut away so that the position of the third finger 12, which is important in gripping the article over its peripheral rim, is more clearly seen.)

When the article is held in the intended way, the positioning of the fingers and hand is markedly limited by the structure of the hand itself as well as by the configuration of the article held, since the stem that is clasped within the crotch of the first two fingers prevents the hand from making various adaptations in the holding of the article that might otherwise be possible without said stem. The structure of the hand, with said hand being relegated usually to this one basic holding position, does not allow itself much practical variation in gripping in other than the preferred position shown. Therefore, since the hand is limited in how it may accommodate itself to hold the article, the most practical alternative, in order to achieve improved gripping of the article, is to accommodate the article to the hand. For such a body of erodable material as described, when new or nearly new, and especially for a slippery body of erodable material such as soap, any configuration features that will improve gripping of the article to a worthwhile extent become important. The improved gripping by the third finger as shown is believed apparent and results from the advantages as explained above, viz. increased friction and the improved ability of the fleshy part of the finger to hook around the double-edged rim so as to gain better purchase.

Not only does this new configuration improve gripping by the third finger but also by the fourth finger which may curve around and under the rim, and by the thumb which (for a new and nearly new body of soap) lies laterally along the concave surface (as described in the

co-pending application cited) located below the side-rim **7**. For a large size body of material, only persons with longer than average-length fingers may gain appreciable purchase with the end of their second finger and sometimes first finger. But the purchase by the third and fourth fingers is more easily gained and becomes all the more practical and worthwhile because their gripping action lies generally opposed to that of the thumb, which enables them to exert a generally opposing gripping force, as to be explained further below. The edge-line of intersection **11** of the side-rim **7** with the lower concave contiguous surface **9** improves the purchase of the thumb and reduces any tendency the thumb may sometimes have to slide upwards out of the described concave region. Even if said lower contiguous surface located between the peripheral rim surface **7** and the bottom surface **4** were not concave, the lower protruding edge-line of intersection **11** portion of the body of material would help to provide an improved grip for the thumb. But the concavity of this lower surface has been found especially helpful in enabling the thumb to maintain secure purchase. Also, it tends to improve gripping by the fingers by accentuating the protrusion of the edge-line **11** portion of the body of material **1**, as described.

Again, referring to FIGURE 2, the straight outer rim surface **17** with the protruding edge line **18** and **19** portions of the body of material are shown being gripped by the fleshy part of the hand, which is referred to generally by the number **20**. (Numbers **17**, **18**, **19**, and **21** are the same as numbers **7**, **10**, **11**, and **9** respectively. But different numbers are used here to designate the different location being referred to for the particular description at hand). A portion **16** of the fleshy part of the hand **20** is shown accommodating itself to the protruding outer rim configuration of the body of material and pressing upwards against the lower side surface **21** located beneath the protruding rim-edge line **19** portion of the body **1**. It is clear that the non-tangential, protruding configuration of the body **1** marked by the edge-line **19** will provide improved purchase by the fleshy part of the hand **20**. The same may be said but to a lesser extent for the upper edge-line **18** portion of the body. (The thumb **15** is cut away to make the drawing more clear.)

It should be pointed out that of the two edge-lines of intersection, the lower line **11** contributes more to the improvement of gripping than does the upper line **10**. But each adds to the overall grippable character of the article.

Further, when one takes ahold of a new cake of soap, made according to the article described, even without it being wet and slippery, the improved gripping afforded by the new design of outer rim imparts to this article an improved "feel" or subjective reaction in the minds of many who grasp it than does a previous design with the rounded rim. This may be of special importance in winning new converts to this product.

It should be clear that the profile of the body of material in plan view may not only be generally circular, but it also may be oval, rectangular or any of a variety of shapes including various polygons, of regular or irregular configuration, with the advantages of the present invention accruing to the user of this article, to greater or lesser extent. The peripheral side rim, by definition, need not be continuous, its location depending on the particular shape of the body of material and where the location of said rim would be helpful to gripping the article. Soap is defined broadly to include any erodable cleansing material of generally soap-like character, regardless of what other substances it may contain such as skin creams, skin moisturizers, medication, etc.

Thus, there is described an improved design of outer rim for an article of the type described that includes an erodable body of material, which may or may not be or become slippery in use. When this article is new, or nearly new, this improved design of rim can provide more efficient gripping by the fingers, by the thumb, and

by the fleshly part of the hand. And since the gripping forces exerted from these three general areas of engagement with the body of material are, in themselves or as resultant forces, generally opposed and balanced in a state of equilibrium, the combined resulting improvement in the efficiency of gripping is even more noticeable and worthwhile.

I claim:

1. In combination, a body of erodable material of a size to be grasped by a hand and manipulated thereby, said body having an upper surface portion; a member extending upwardly from and attached to at least part of said upper surface portion of said body, which member has a maximum cross dimension substantially less than that of the body of erodable material, said body having an opposite surface for application to an object to be treated, said member including means for holding said body of material that include a slender stem portion, said stem being sufficiently slender to be positioned in the crotch of two adjacent squeezing fingers of a hand without spreading said fingers to an uncomfortable degree, the side of said body provided with a laterally projecting erodable rim so as to enable some of the fingers and the fleshy part of the palm of the hand to grip over, around, and under this rim, and the thumb of said hand to grip the side surface of the body below this rim, said rim intersecting the contiguous surface below non-tangentially, so as to provide a protruding edge-line portion of the body of material in the general shape in vertical profile an an angular corner.

2. The combination as in claim **1** wherein the body of material contains soap.

3. The combination as in claim **2** wherein said member includes means for holding said body of material that includes a slender substantially symmetrical stem portion extending upwardly from the base portion of said member, said stem being sufficiently slender to be positioned comfortably in any orientation in the crotch of two adjacent squeezing fingers of a hand without spreading said fingers to an uncomfortable degree, and a head carried by the upper end of said stem that extends laterally out over a substantial portion of said adjacent fingers that squeeze said holding means within their crotch.

4. The combination as in claim **1** wherein said rim intersects the continguous surface above non-tangentially, so as to provide a protruding edge-line portion of the body of material in the general shape in vertical profile of an angular corner.

5. The combination as in claim **4** wherein the body of material contains soap.

6. The combination as in claim **5** wherein said member includes means for holding said body of material that includes a slender substantially symmetrical stem portion extending upwardly from the base portion of said member, said stem being sufficiently slender to be positioned comfortably in any orientation in the crotch of two adjacent squeezing fingers of a hand without spreading said fingers to an uncomfortable degree, and a head carried by the upper end of said stem that extends laterally out over a substantial portion of said adjacent fingers that squeeze said holding means within their crotch.

References Cited by the Examiner

UNITED STATES PATENTS

1,975,016	9/1934	Nassif	45—28
3,100,363	8/1963	Staver	45—28
3,125,824	3/1964	Staver	45—28

FOREIGN PATENTS

567,780	3/1924	France.

MORRIS KAPLAN, *Primary Examiner.*

FRANK B. SHERRY, *Examiner.*

CASMIR NUNBERG, *Assistant Examiner.*