METHOD AND APPARATUS FOR GRINDING

Filed Sept. 6, 1952 6 Sheets-Sheet 1

FIG-1

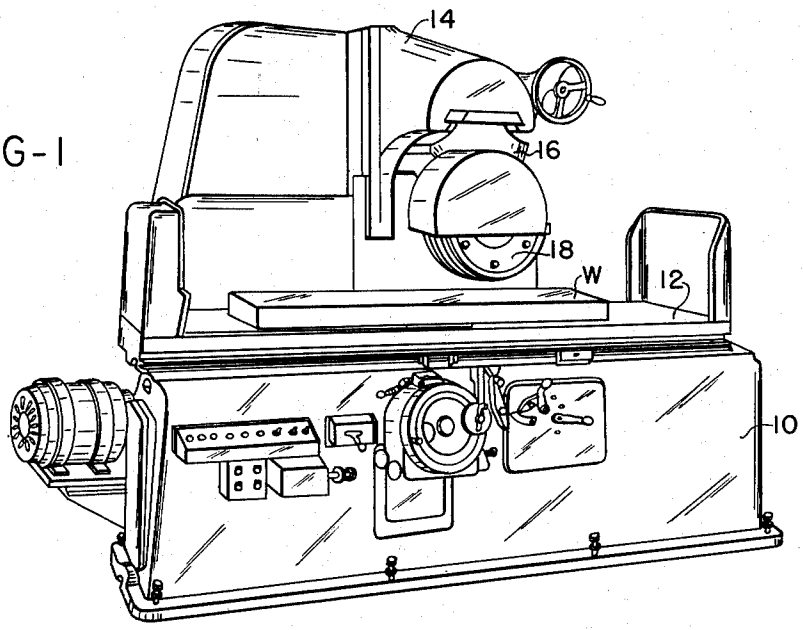

FIG-2

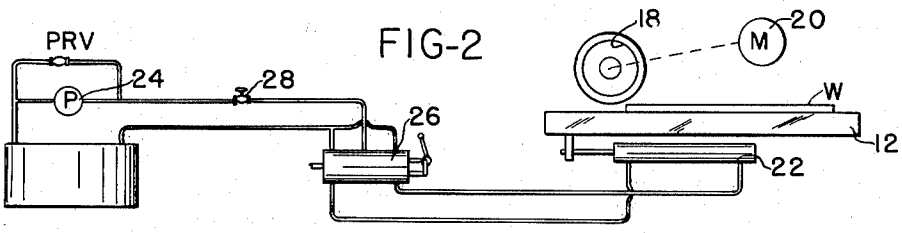

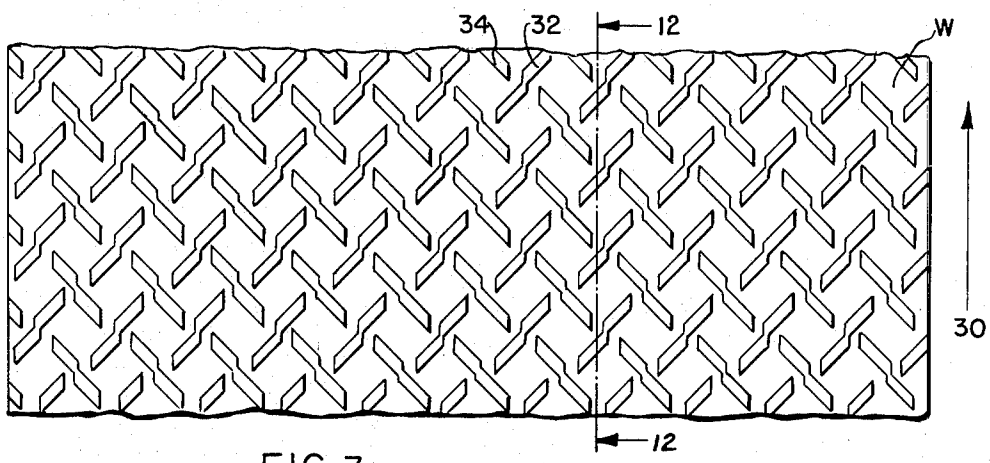

FIG-3

INVENTOR
FREDERICK G. KRAFFT
BY Toulmin & Toulmin
ATTORNEYS

METHOD AND APPARATUS FOR GRINDING

Filed Sept. 6, 1952 6 Sheets-Sheet 2

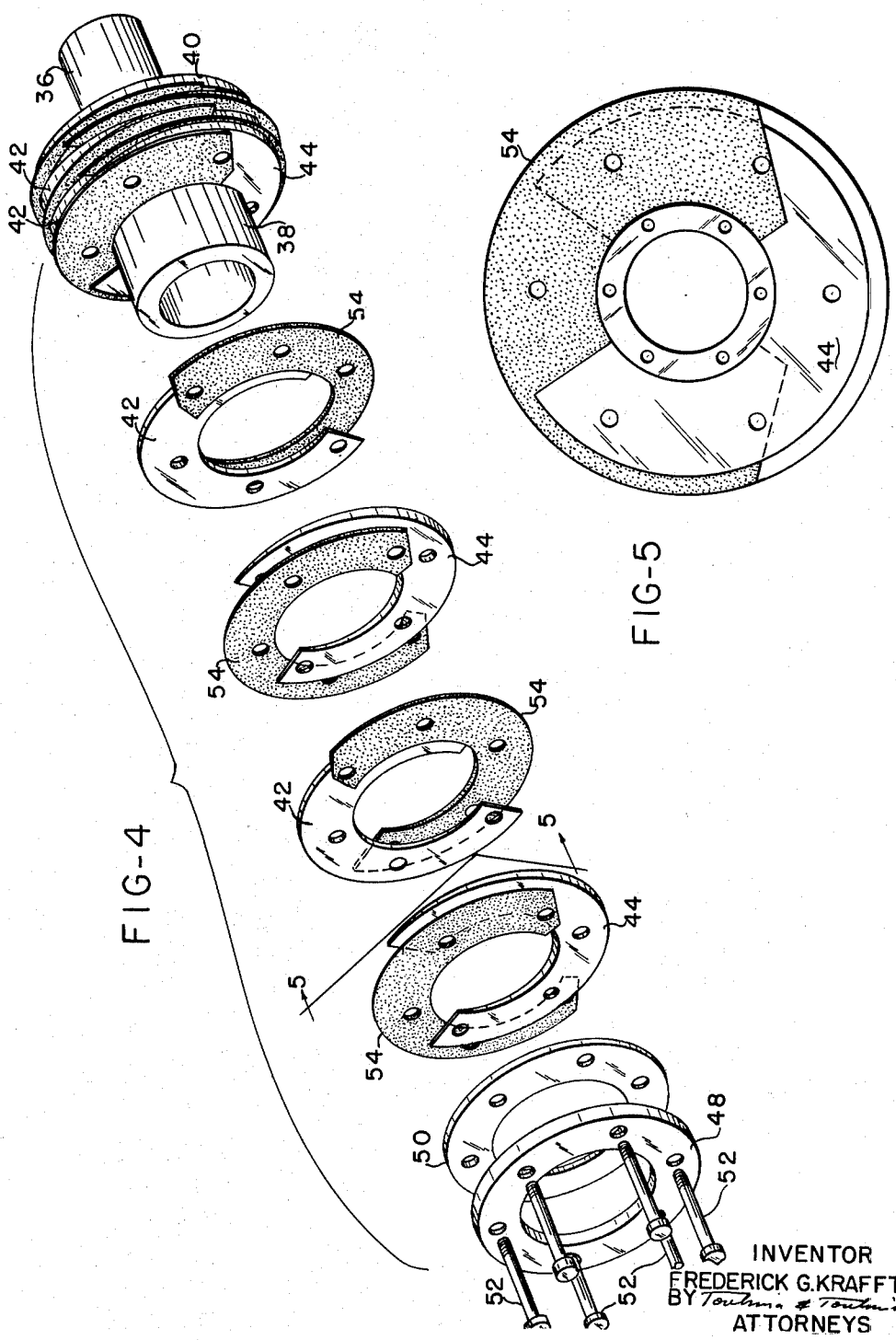

FIG-4

FIG-5

INVENTOR
FREDERICK G. KRAFFT
BY Toulmin & Toulmin
ATTORNEYS

METHOD AND APPARATUS FOR GRINDING

Filed Sept. 6, 1952 6 Sheets-Sheet 3

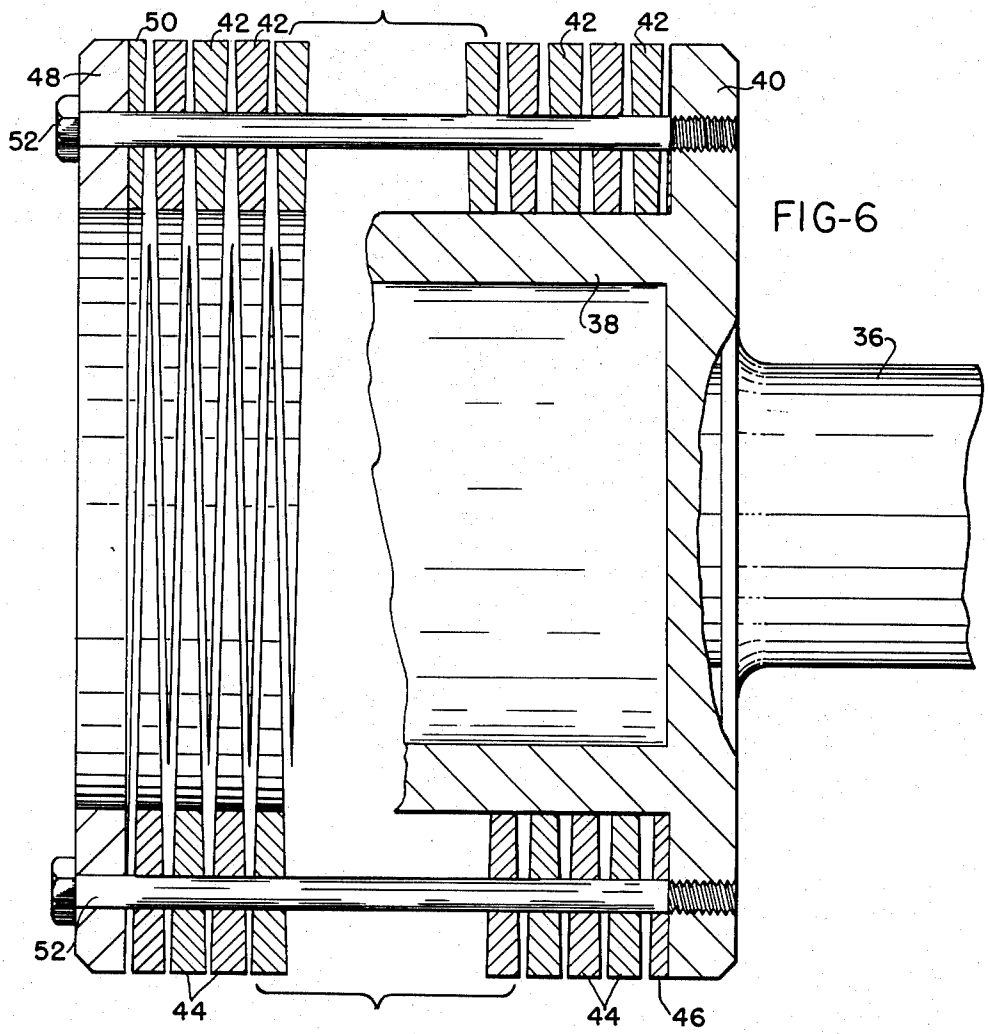

FIG-6

FIG-11

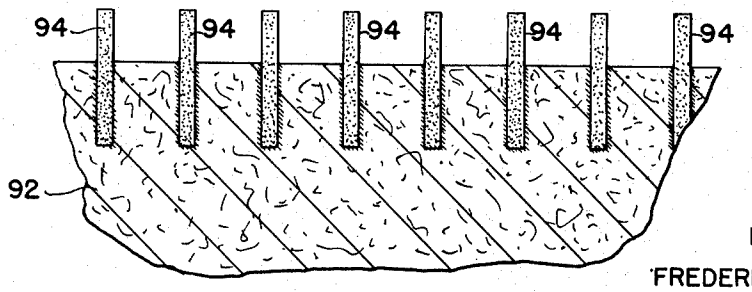

INVENTOR
FREDERICK G. KRAFFT
BY Toulmin & Toulmin
ATTORNEYS

METHOD AND APPARATUS FOR GRINDING

Filed Sept. 6, 1952 6 Sheets-Sheet 4

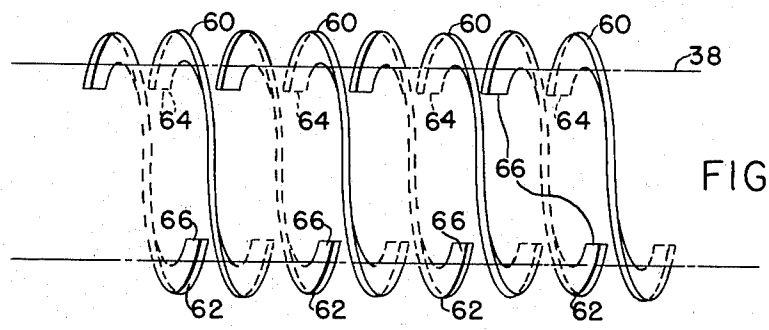

FIG-10

FIG-7

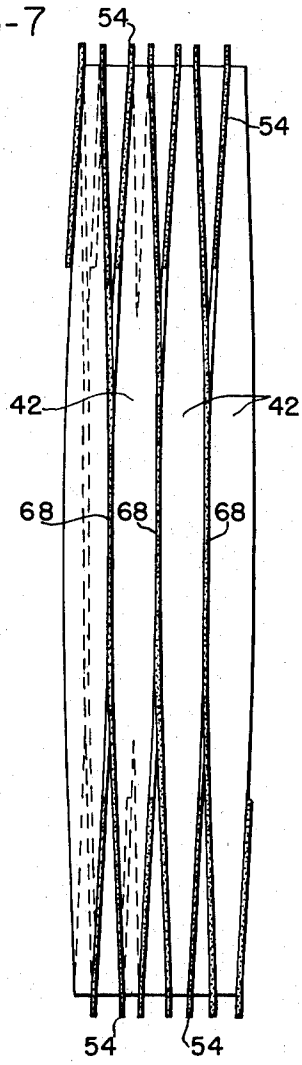

FIG-8

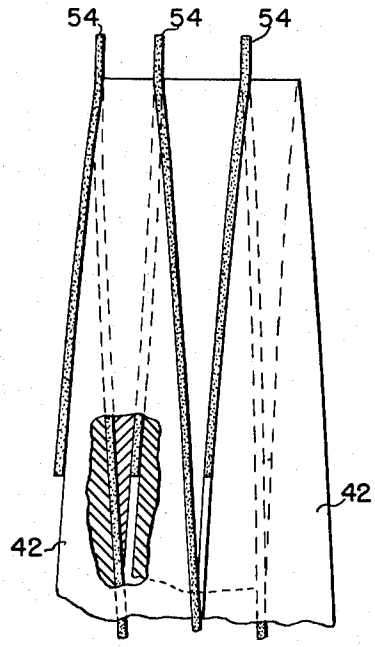

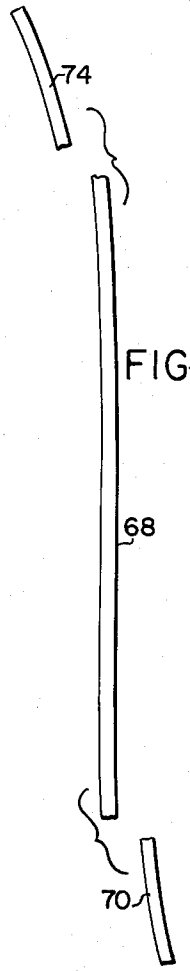

FIG-9

INVENTOR
FREDERICK G. KRAFFT
BY Toulmin & Toulmin
ATTORNEYS

METHOD AND APPARATUS FOR GRINDING

Filed Sept. 6, 1952 6 Sheets-Sheet 5

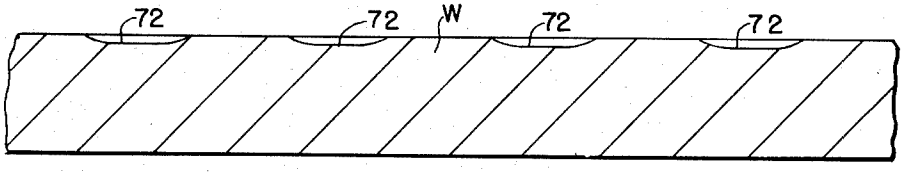

FIG-12

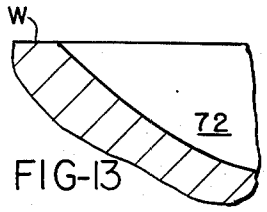

FIG-13

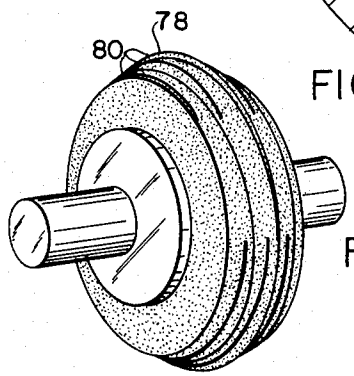

FIG-15

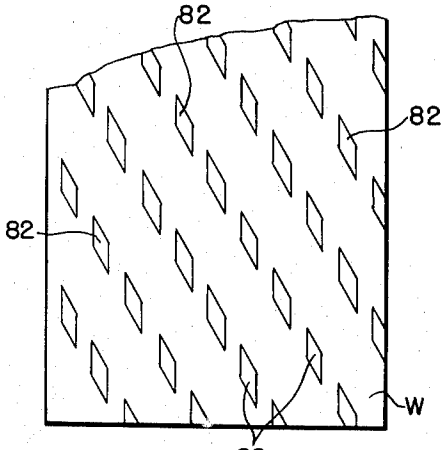

FIG-18

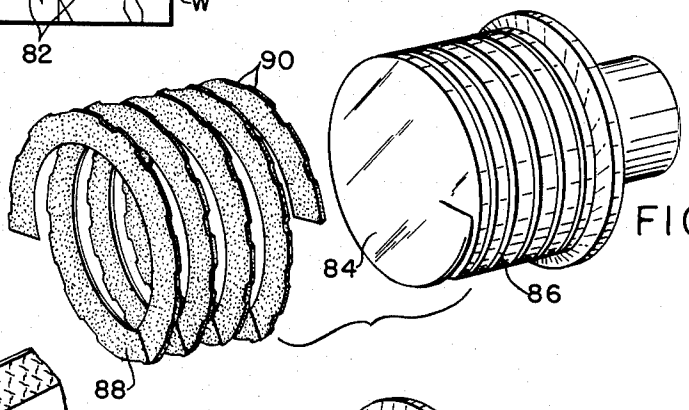

FIG-16

FIG-14

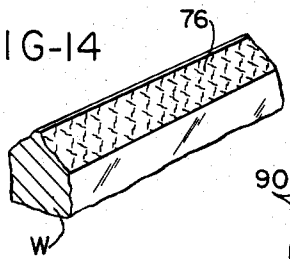

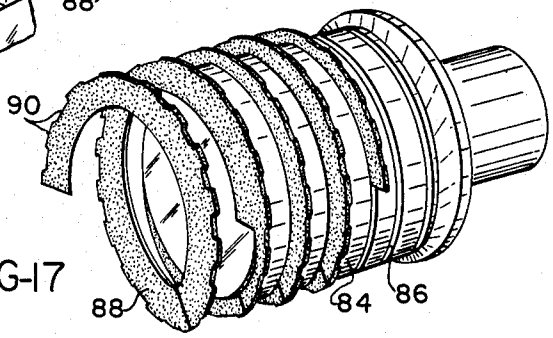

FIG-17

INVENTOR
FREDERICK G. KRAFFT
BY Toulmin & Toulmin
ATTORNEYS

METHOD AND APPARATUS FOR GRINDING

Filed Sept. 6, 1952 6 Sheets-Sheet 6

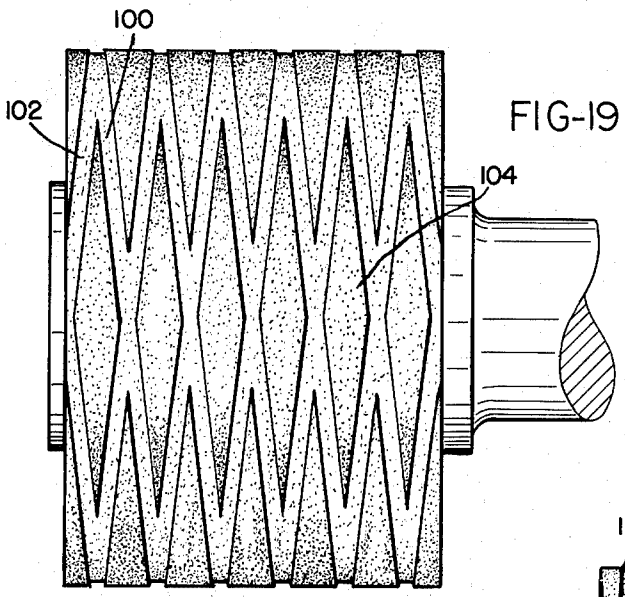

FIG-19

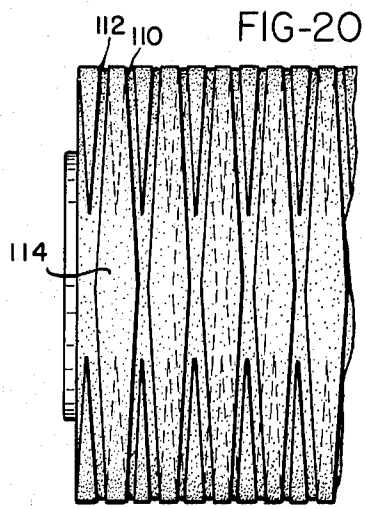

FIG-20

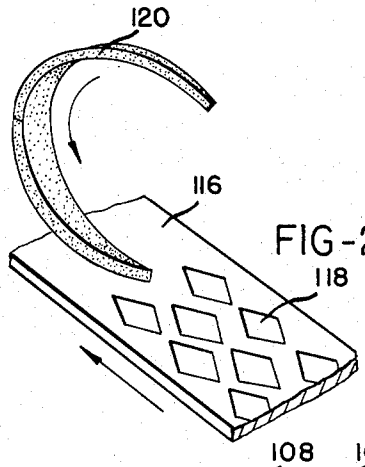

FIG-22

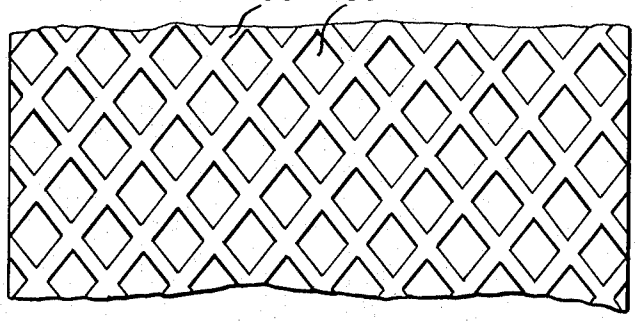

FIG-21

INVENTOR
FREDERICK G. KRAFFT
BY Faulmin & Faulmin
ATTORNEYS

United States Patent Office

2,729,919

Patented Jan. 10, 1956

1

2,729,919

METHOD AND APPARATUS FOR GRINDING

Frederick G. Krafft, Springfield, Ohio, assignor to The Thompson Grinder Company, Springfield, Ohio, a corporation of Ohio

Application September 6, 1952, Serial No. 308,265

25 Claims. (Cl. 51—92)

This invention relates to a method and apparatus for grinding, and particularly to such a method and apparatus in connection with producing oil spots on bearing surfaces, and for producing similar regular patterns of spots on other surfaces for the purpose of either retaining lubricant or being decorative, or both.

In the manufacture of machine tools and the like, particularly grinders, planers, shapers, lathes, and similar organizations, there is at least one reciprocating part that slides on machined ways. These ways must be very carefully machined to make them perfectly true and smooth in order that the part reciprocating thereon will be guided thereby in a perfectly true path.

While the forming of the ways and the bearing surfaces on the parts that rest thereon to perfectly true and exactly mating surfaces is a relatively simple task utilizing modern machinery and modern methods, the very perfection to which these interengaging surfaces are formed makes it necessary to provide some means of supplying lubricant thereto so that the surfaces do not run dry in operation. When the surfaces are ground to a smooth finish, then the relative reciprocation of the ways and the part supported thereon strips the bearings surfaces of all lubricant, and not only does this make it more difficult to reciprocate the said part, but chattering may occur, seriously detracting from the workpieces being machined, and serious damage to the bearing surfaces of the part and the ways can occur because of the lack of lubricant thereon.

It is the practice in connection with the sliding bearing surfaces of such machine elements to perform a spotting operation thereon to provide small depressions in the way, for retaining lubricant to avoid the drawbacks referred to above. While this is a standard procedure in connection not only with the ways of machine tools, but also for surface plates, and the like, it is nevertheless, an extremely slow and expensive operation, and there is absolutely no way of insuring that the spot pattern is uniform over the entire area spotted, or that the individual spots will present even a fair degree of uniformity.

For this reason, many hand spotted ways are defective in that too little lubrication is provided at one point, while too much may be provided at another point, thereby providing an opportunity for inaccuracy in the operation of the machine.

In certain instances, ways of the nature described are not spotted, but the retaining of the lubricant is taken care of by the bearing surfaces of the reciprocating member which are either spotted or which may only be rough ground. In this case, the spotted or lubricant retaining surface is invisible and the ways themselves are ground to an extremely smooth uniform finish.

In the last instance mentioned above, it is important that the ways give an absolutely uniform appearance and the grinding thereof is therefore an extremely critical operation, with the result that there is considerable scrap in connection with this particular portion of manufacturing the machine.

Another extremely important reason why the hand

2

spotting of ways is not always entirely satisfactory is that a great many machine tool ways are made of hardened material, either by hardening the way area directly on the machine, of which the way is a part, or by machining the way as a separate member and thereafter assembling it with the machine tool. In this case, it is practically impossible to accomplish any sort of satisfactory hand scraping operation that will provide the spots on the way for retaining lubricant.

Having the foregoing in mind, the particular object of the present invention is to provide a method and apparatus for spotting bearing surfaces, such as machine tool ways, in such a manner as to eliminate the hand labor previously employed in this operation.

Still another object is the provision of a method and apparatus for spotting machine tool ways which will produce an absolutely uniform and unvarying pattern of spots thereon.

It is also an object of this invention to provide a method and apparatus for imparting a surface configuration to a work member such as a machine tool way which gives the said way an attractive appearance by virtue of the absolutely uniform pattern of spots, and which will prevent the scrapping of work members because of minor and mechanically inconsequential surface blemishes.

Another object is the provision of a novel type of abrading member particularly useful in carrying out the method of my invention.

A still further particular object is the provision of a work member particularly adapted for use as a machine tool way and characterized in the provision on the working surface thereof of an arrangement of oil spots formed thereon in accordance with the teachings of my invention.

These and other objects and advantages will become more apparent upon reference to the following description taken in connection with the accompanying drawings, in which:

Figure 1 is a perspective view of a grinding machine set up for carrying out the method of this invention;

Figure 2 is a more or less diagrammatic view showing the hydraulic operating circuit for the machine of Figure 1;

Figure 3 is a fragment of a bearing surface which has been spotted in the machine of Figure 1 in accordance with the teachings of my invention;

Figure 4 is an exploded perspective view of one form of wheel which I have constructed according to my invention;

Figure 5 is a transverse sectional view through the wheel and may be indicated by cutting plane **5—5—5** on Figure 4;

Figure 6 is a vertical longitudinal section taken through the wheel with the abrasive segments removed and showing only the support portions of the wheel;

Figure 7 is a view of the assembled wheel of Figures 4 and 5 looking in from the left side of the wheel as it is viewed in Figure 5;

Figure 8 is a view showing the top portion of the wheel of Figure 7 at considerably enlarged scale;

Figure 9 is a development showing substantially the path which any one of the abrasive segments of the wheel of Figures 4 and 5 takes;

Figure 10 is a diagrammatic view provided for the purpose of illustrating the manner in which the abrasive segments are arranged in the wheel of Figures 4 and 5;

Figure 11 is a fragmentary sectional view showing a wheel having the same characteristics as the wheel of Figures 4 and 5, except that the abrasive segments are permanently bonded into the body of the wheel;

Figure 12 is a fragmentary sectional view indicated by line **12—12** on Figure 3 showing a number of the spots on the workpiece in cross-section and illustrating the uniformity of configuration and spacing thereof;

Figure 13 is a fragmentary view showing one of the oil spots in Figure 12 drawn at greatly enlarged scale; showing how the ends of the spots are tapered out so that no burrs are formed;

Figure 14 is a fragmentary perspective view showing a V-way spotted according to my invention;

Figure 15 is a perspective view showing a wheel adapted for spotting the V-way of Figure 14;

Figure 16 is a perspective view of a modification wherein the hub or holder is formed with a helical groove therein and the abrasive element is inserted therein in the form of substantially circular segments;

Figure 17 is a view of the Figure 16 modification, but showing the abrasive segments partially inserted in the hub;

Figure 18 is a view showing the spot pattern imparted to a work member by the Figures 16 and 17 arrangement;

Figure 19 is a side elevational view of a modification showing a grinding wheel formed in a manner to provide spots on a work member ground thereby;

Figure 20 is a view of another modification similar to Figure 19;

Figure 21 is a view looking down on a workpiece which has been ground with one of the wheels of Figures 19 or 20, showing a typical spot pattern imparted to the workpiece by the wheel; and

Figure 22 is a perspective view more or less diagrammatically illustrating the manner in which the individual portions of the wheels of Figures 19 and 20 operate to form the spot pattern on the workpiece.

General arrangement

My invention is practiced by providing an abrasive member having an interrupted work engaging surface thereon, and moving the working surface of the abrading member and the surface that is to be spotted relatively at a predetermined speed. According to one form of my invention, the abrading member comprises projecting ribs extending generally helically thereabout, one right hand, and one left hand, and with each rib interrupted at each alternate point of intersection thereof with the other rib. When the abrading member is rotated at a predetermined constant velocity and the work member to be spotted is reciprocated relative thereto at a predetermined velocity, one single pass of the abrading member across the surface of the work member will provide for the spot pattern desired.

According to another form which my invention can take, instead of forming right and left hand helical ribs on the wheel, the wheel can be formed with right and left hand helical grooves and the spot pattern imparted to the workpiece is formed by the raised portions of the wheel between the grooves.

Structural arrangement

Referring to the drawings somewhat more in detail, the machine illustrated in Figure 1 comprises a bed **10** having reciprocably mounted thereon a table **12** on which the work member W to be operated is mounted.

A column **14** adjacent bed **10** supports a wheelhead assembly **16** having a spindle on which is mounted the abrading member **18** according to my invention.

As is diagrammatically illustrated in Figure 2, abrading member **18** has connected thereto the constant speed motor **20** for driving the abrading member at a predetermined rotational speed.

Figure 2 also indicates that the reciprocating table **12** is connected with the reciprocating hydraulic motor **22** in bed **10** which is hydraulically connected with pump **24** by reversing valve **26**. A flow control valve **28** may be provided in the pump discharge line for regulating the fluid flow to motor **22**, whereby the linear velocity of table **12**, and, therefore, of work member W, can be regulated.

Figure 3 illustrates a portion of work member W after the surface thereof has been spotted according to this invention. The direction of movement of work member W in Figure 3 is indicated by arrow **30**. The surface of the workpiece of Figure 3 will be seen to contain a first group of diagonal lines of spots **32** and a second group of diagonal lines of spots **34**, with the spots being spaced from each other. However, even though the spots are spaced from each other, a straight line drawn across the surface in any direction will intersect a plurality of the spots so that it will be seen that if lubricant were contained in the spots, the complete surface of a member supported on the spotted surface would be lubricated.

It will also be noted in Figure 3 that the spots are absolutely uniform as to individual size and spacing so that absolutely uniform lubrication of the surface is had, as well as there being uniform bearing surface presented for supporting any member that is mounted on the spotted surface.

It will be understood that the spot pattern illustrated in Figure 3 is only representative of a great many different patterns that can be formed in accordance with this invention. The particular pattern shown in Figure 3 lends itself well to being formed by an abrading member that can be constructed in a convenient manner, but many modifications in the structure of the abrading member are contemplated, and these modifications would lead to varying pattern forms.

The abrading member which I employ for obtaining the spot pattern of Figure 3 is illustrated in detail in Figures 4 through 10. Turning first to Figure 6, the spindle of the wheelhead bears reference numeral **36**, and mounted thereon is a wheel hub **38** having a radial flange **40** at the spindle end of the hub. Adapted for being closely received about the outer surface of cylindrical hub **38** are a plurality of wedge-shaped segments **42** having their widest part at the top in Figure 6 and arranged therebetween are identically shaped wedge segments **44** having their widest parts at the bottom.

The wedge members **42** and **44** are conveniently formed by being made flat on their opposite sides by grinding in a surface grinder. As will be seen hereinafter, this particular manner of forming the wedge plates **42** and **44** contributes to the particular configuration of the spots in the spot pattern of Figure 3, and that the spots could be varied in configuration by changing the manner of forming wedge members **42** and **44** so that instead of their opposite faces being flat, they would be arcuate in configuration.

In Figure 6 at the right side of the view, in direct engagement with radial flange **40** is a wedge member **46** with its thick side at the bottom, and which thick side is only one-half the thickness of the thick sides of the wedge members **42** and **44**. The thin wedge member **46** is provided so that when the wheel is assembled, the wedge members **42** and **44** will be positioned vertically to the axis of rotation of the abrading member.

At the extreme left side of Figure 6 is a clamping ring **48** and in engagement with the right face of this clamping ring is a second thin wedge member **50**, exactly like wedge member **46**, except that its thick part is at the top. A number of bolts **52** may be provided for clamping the entire assembly together, and the provision of wedge member **50** insures that clamping ring **48** will be positioned in a plane normal to the axis of the abrading member after it is assembled.

Turning now to Figures 4 and 5, it will be observed that each of the wedge members **42** and **44** is open at the thin side over an angle on the order of about 60°.

The said openings at the thin sides of the wedge members are availed of for mounting the abrasive segments **54** about the hub **38** according to my invention. This is brought out in Figures 4 and 5, wherein it will be seen that each of the abrasive segments **54** extends partially around the periphery of the abrading member. Each

abrasive segment has its open side arranged diametrically opposite to the open side of the adjacent of the wedge members **42**, **44**. Further, each abrasive segment is arranged so that it lies on one face of the adjacent wedge member on one side of the opening in the wedge member, and in the opposite face thereof, on the other side of the said opening.

Thus, the abrasive segments and the wedge members are, in effect, threaded together, one pair in a right-hand direction and then the next pair in a left-hand direction, and so on until all of the abrasive segments and the corresponding wedge members have been brought together and mounted on the cylindrical hub **38**. At this time the bolts **52** are passed through apertures provided therefor in the wedge members and abrasive segments, and the entire assembly is made rigid by drawing the bolts up tight.

The resulting assembly is best illustrated at the right side of Figure 4, and in Figure 5 and in Figures 7 and 8. In these figures it will be observed that what is provided is an abrading member having abrading rib means extending therefrom. These rib means comprise segments of abrading material arranged in paths which spiral about the member in right and left-hand helixes. Each rib member is discontinuous at alternate points of intersection of the spiral path thereof with the spiral path of the other rib means.

Figure 10 it will be noted shows one end point **64** of the first portion of the right-hand rib **60** disposed substantially midway between the end points **66** of the nearest adjacent segment of the left-hand rib **62**. Similarly with each end of each segment of the two ribs inwardly of the ends of the work member.

While the rib members **60** and **62** in Figure 10 have been shown to comprise substantially true helices, and in which case the individual spots formed by the segments of the ribs would be in the form of straight diagonal lines, the explained manner of forming the wedge members **42** and **44** by surface grinding the opposite faces thereof to flat surfaces holds the abrasive segments in a form which is not a true helix. Rather, the end portions of the abrasive segments are supported at substantially true helix angles, while the center portion of each abrasive segment is held in an almost straight circumferential path. This can be seen in Figure 7, wherein the center portion **68** of the segments will be seen to extend in substantially a straight circumferential direction, whereas the end portions of the segments form nearly a true helix.

Because of the described departure from a true helix of the abrasive segments, each of the individual spots illustrated in Figure 3 has a slight offset in the center, the said center part of the spot, of course, corresponding to the described center portion of the abrasive segment by which it is formed. It will be understood that if the wedges were formed to support the abrasive segments at a true helix angle, then the spots would be perfectly straight and would not have the indicated offset in the center. The wedge members could readily be formed in this manner as by a cam operated grinder or the like, but the exact manner in which the wedges are machined forms no essential part of the present invention. It is within the scope of this invention to provide a solid hub having helical slots formed therein for receiving the segments, if so desired, and exactly equivalent results so far as the spotting of the surface being machined would obtain.

Figure 9 shows one of the abrasive segments in developed form, and therein it will be clearly seen that the end portions **70** of the segment extend at different angles from the center portion **68**.

In operation, the built-up abrading member is mounted on the spindle of the wheelhead or is built-up directly thereon, and then is preferably trued, as by a diamond, and then is set in motion at the proper grinding speed.

The table **12** of the grinding machine is positioned so that work member W is spaced longitudinally from the abrading member and the wheelhead and table are adjusted relatively in height to bring the surface to be worked and the wheel into proper grinding relation to provide for the proper depth of spots. The valve **26** is then actuated to provide for one single traversal of the abrading member across the surface to be spotted. This constitutes the entire spotting action and the work member can then be removed.

In the machining of individual work members, such as the detachable ways for machine tools, surface plates, and the like, the work member would be mounted on the table of a machine about as illustrated in Figure 1, and the grinding operation carried out as described. In other cases, as, for example, a lathe bed with the ways integrally formed thereon, the final finishing operation on the ways of the bed would probably be carried out in a way grinding machine having wheelheads positioned to grind all of the way surfaces. In an arrangement of this type, the regular way grinding wheels would be replaced by an abrading member according to this invention for the spotting operation or an auxiliary spindle could be provided, and the ways spotted after the finishing operations on the ways had been completed in the way grinding machine.

The uniformity of the spot pattern is illustrated in Figure 3, and in Figures 12 and 13 the uniformity of depth of the individual spots is illustrated, as well as the formation at the end of each spot. In Figure 12, the individual spots are indicated at **72**, and it will be observed that they are all exactly the same depth. The advantage obtaining from this is not only a uniform appearing spot pattern, but also absolutely uniform lubrication over the entire spotted surface.

One of the spots is illustrated at enlarged scale in Figure 13.

The arrangement described up to this point has been for the purpose of working a flat surface, but my invention can also be used for spotting V-ways, as will be seen from Figures 14 and 15.

In Figure 14, the work member W has the V-way **76** thereon with a spot pattern according to my invention, and for working this surface, I may utilize the wheel illustrated in Figure 15, which has a V-shaped periphery **78** which has been crush formed by a properly shaped roll so as to have right and left hand spiralling ribs **80** projecting therefrom.

In certain instances, it may be sufficient merely to provide a plurality of uniformly distributed spots on a surface without making the spots or the patten thereof, of such a nature that no straight line can be drawn across the surface without intersecting the spots, as is the case with the Figure 3 spot pattern. Such a spot pattern is illustrated in Figure 18, wherein the work member W has the distributed spots **82** formed thereon. This spot pattern can be produced by the wheel of Figures 16 and 17, and which comprises a holder **84** having a helical slot **86** therein for receiving the segments **88**, the outer peripheries of which are interrupted, as at **90**, to provide for the spaced surface working areas that will provide the spot pattern of Figure 18. As will be noted, the helical rib means are made up of segments, each of which extends about 360° of the periphery of the holder and has thus a work member which can be manufactured by conventional methods.

The holder **84** in Figures 16 and 17 is provided with the continuous spiral or helical slot **86**, and the abrasive segments **88** can each consist of an annular disk cut through at one side, except for the end portions of the abrasive rib which might consist of less than 360° about the holder. The segments are mounted on the holder by threading them into the groove or slot **86**, and they can be cemented or clamped therein as may be desired in order to permit rotation of the holder at grinding speeds without the segments becoming dislodged therefrom.

Still another manner in which an abrading member according to my invention can be constructed is shown in Figure 11 in which the abrading member comprises a body portion **92** with rib poritons **94** of abrading material secured thereto so that the rib portions follow spiral paths as has been previously explained in connection with the other modifications. Body **92** does not constitute any abrasive material, and if of a rigid material, such as ceramic or metal or glass, will have the abrading ribs **94** projecting outwardly from the outer periphery thereof. The body member **92** could also be made of a resilient material such as a natural or synthetic rubber or an elastomeric plastic and in this event the abrading ribs could have their outer extremities substantially flush with the surface of the body member. The body member may advantageously be of a moldable or castable material in which case the abrading ribs **94** would be supported in a suitable mold cavity or recess and the material of the body cast thereabout. However, the body portion could be formed either by molding, casting or machining so as to have spiralling grooves in the periphery thereof for receiving the abrasive rib members **94** to be bonded thereto by any suitable adhesive. An advantage that obtains from the practice of my invention, separate and apart from the lubricating or surface interrupting characteristics of the spot pattern imparted to the surface, is the fact that the regularity and uniformity of the spot pattern imparts a pleasing appearance to the treated surface.

Further, with the surface interrupted by the spot pattern, minor irregularities therein which are of absolutely no consequence mechanically, but which would fatally detract from the work member visually, are hidden, and the work members which might otherwise be scrapped can be utilized as first-class articles of manufacture.

In this connection, it is conceivable that my invention may be practiced for no other purpose except to provide surface ornamentation for a work member, such as a saw blade or the like. In this case, the individual spots of the pattern would have substantially no depth, and the natural result of the practice of this invention would be to produce work members much more pleasing in appearance, and in which inconsequential surface blemishes would be hidden.

The actual depth of the spots which I provide for the purposes of lubrication, as in connection with machine tool ways, or for surface interruption, as in the case of a surface plate, may vary widely as, for example, from, say, .00005 to .002. For pure surface ornamentation, of course, the spots might have a substantially unmeasurable depth, although it will be understood in the particular case of a saw blade, or similar working member, the spots might have sufficient depth to retain a lubricant to similar advantage.

As a specific example of one wheel construction and machining arrangement for spotting ways a wheel constructed as indicated in Figure 4 was employed with the wheel being about twelve inches in diameter measured to the outermost portion of the abrading ribs. Each rib extended around about 270° of the circumferential extent of the wheel and had a lead of about one-half inch.

With the wheel head motor operating at a speed of about 1800 R. P. M., it will be evident that the time required for the wheel to rotate through the angle about which one of the segments extends, namely, two-thirds of a revolution will be one-forty-fifth of a second.

If the spots formed on the workpiece by the abrasive action of the ribs are to extend across the workpiece at an angle of about 45°, then the workpiece will move relative to the wheel, so that it travels a distance equal to the lead of one of the ribs, about one-half inch, in the same length of time that the wheel is moving through the angle about which the rib extends, namely, on the order of one-thirtieth of a second.

In one second, therefore, the workpiece will move fifteen inches, and this speed, converted to the more customary units of feet per minute is seventy-five feet per minute. This speed of movement of the grinding machine table is a speed which can be attained by practically all machines.

The wheels illustrated in Figures 19 and 20 are characterized in being formed with right and left hand grooves therein, thus forming raised elongated diamond-shaped portions between the grooves which form the actual spot pattern.

In Figure 19, for example, the wheel is formed with a right-hand double start helical groove **100** which is intersected by a left-hand double start helical groove **102**. These grooves are formed in the periphery wheel by use of a wide diamond and regulation of the rate of rotation of the wheel and the transverse feed of the diamond during a dressing operation to produce the grooves so that they will have the proper lead.

In Figure 19 it will be evident that there is formed about the wheel a plurality of elongated diamond-shaped raised portions **104**, and when the wheel is rotated at a predetermined speed and the workpiece to be spotted is driven linearly relative thereto at a predetermined speed, a pattern of elongated spots **106** will be formed on the workpiece. The raised areas **108** on the workpiece between the spots provide the bearing surface for supporting the part bearing on the way surface. It will be evident that the particular size of the spots and the spacing thereof from each other could readily be controlled by controlling the width of the groove formed in the periphery of the wheel, whereby the proper ratio of bearing area to oil spot area can be maintained.

In Figure 20 a wheel substantially the same as illustrated in Figure 19 is shown, except that the right and left hand helical grooves **110** and **112** are single start instead of double start, and this results in the raised diamond-shaped arrangement **114**, being substantially more elongated than those of Figure 19. The same sort of spot pattern would be imparted to the workpiece by both wheels.

The illustration in Figure 22 shows a workpiece **116** having spots **118** thereon, each of said spots being formed by an elongated diamond-shaped segment of the grinding wheel, and one of which segments is illustrated in Figure 22 at **120** as cut off from the wheel.

In practice, the arrangement of Figures 19 and 20 is employed in the following manner; a machine tool bed is first planed to bring the way surfaces thereof to within a certain limit over their finished size. The machine tool bed is then mounted on the table of a grinding machine with the way sections aligned with the machine so that a minimum amount of stock has to be removed from the actual way section.

The ways are then ground at regular grinding speed, including rough and finish grinding cycles, and with the wheel that accomplishes the grinding being trued in the usual manner to provide for the proper accuracy and quality of finish.

After the ways have been ground in the described manner to the proper accuracy, size and finish, the grinding wheel is then dressed to form the right and left-hand spiral grooves in the periphery thereof as described above. At this time the grinding wheel will be running at reduced speed and the diamond will be reciprocated transversely of the wheel during the dressing operation. The spiral grooves formed in this manner will be about .003 to .005 inches in depth.

After the wheel has been dressed to form the grooves thereon, the ways can then be spotted in the manner which has been described previously by operating the wheel at grinding speed and driving the bed past the wheel a single time and at a predetermined speed for each surface that is to be spotted.

Thereafter, the bed is removed from the grinder and another bed to be worked is placed thereon. At this

time it will not be necessary to true off the grooves of the grinding wheel, as they will be worn down materially during the rough grinding operation and will be substantially completely removed at the time of trueing the wheel for the finish grinding operation.

It will be understood that this invention is susceptible to modification in order to adapt it to different usages and conditions, and, accordingly, it is desired to comprehend such modifications within this invention as may fall within the scope of the appended claims.

I claim:

1. In an arrangement for working a smooth surface to form a spot pattern thereon; a support for the workpiece having the said surface, a rotatable abrasive member for working the surface, said member comprising a holder forming the hub of the wheel, abrasive segments mounted in said holder, one series of said segments forming a right hand spiral rib on the holder interrupted between the ends of adjacent segments, and another series of said segments forming a left hand spiral rib on the holder interrupted between the ends of adjacent segments, the interruptions in the respective ribs being opposite each other, means for rotating the abrasive member at a predetermined speed, and means for reciprocating said support and member relatively at a predetermined speed.

2. In an arrangement for working a smooth surface to form a spot pattern thereon; a support for the workpiece having the said surface, a rotatable abrasive member for working the surface, said member comprising a holder forming the hub of the wheel, abrasive segments mounted in said holder, one series of said segments forming a right hand spiral rib on the holder interrupted between the ends of adjacent segments, and another series of said segments forming a left hand spiral rib on the holder interrupted between the ends of adjacent segments, each segment extending around the member for at least 180°, the interruption in the respective ribs being opposite each other, means for rotating the abrasive member at a predetermined speed, and means for reciprocating said support and member relatively at a predetermined speed.

3. In an arrangement for working a smooth surface to form a spot pattern thereon; a support for the workpiece having the said surface, a rotatable abrasive member for working the surface, said member comprising a holder forming the hub of the wheel, abrasive segments mounted in said holder, one series of said segments forming a right hand spiral rib on the holder interrupted between the ends of adjacent segments, and another series of said segments forming a left hand spiral rib on the holder interrupted between the ends of adjacent segments, each segment extending around the member an angular distance not less than 180° up to about 300°, the interruption in the respective ribs being opposite each other, means for rotating the abrasive member at a predetermined speed, and means for reciprocating said support and member relatively at a predetermined speed.

4. In an arrangement for working a smooth surface to form a spot pattern thereon; a support for the workpiece having the said surface, a rotatable abrasive member for working the surface, said member comprising a holder forming the hub of the wheel, abrasive segments mounted in said holder, one series of said segments forming a right hand spiral rib on the holder interrupted between the ends of adjacent segments, and another series of said segments forming a left hand spiral rib on the holder interrupted between the ends of adjacent segments, each segment extending around the member an angular distance not less than 180° up to about 300°, the interruptions in the respective ribs being opposite each other, means for rotating the abrasive member at a predetermined speed, means for reciprocating said support and member relatively at a predetermined speed, each said segment having a lead of a predetermined amount from end to end, and the speed of relative reciprocation of the support and member being such that the support moves relative to the member an amount about equal to said lead while the member rotates the angular distance of one segment.

5. A rotary abrading member of the nature described; means forming a hub for said member adapted for connection with a spindle, means on the hub forming right and left hand spiralling groove means, and abrasive segments mounted in said groove means and forming discontinuous right and left hand spiralling abrasive rib means.

6. An abrasive member of the nature described; a cylindrical hub adapted for mounting on a spindle, a plurality of annular wedge members mounted on said cylindrical hub and defining right and left hand spiralling groove means, and abrasive segments mounted in said groove means and defining right and left hand spiralling discontinuous abrasive rib means.

7. An abrasive member of the nature described; a cylindrical hub adapted for mounting on a spindle; a plurality of annular wedge members mounted on said cylindrical hub and defining right and left hand spiralling groove means, abrasive segments mounted in said groove means and defining right and left hand spiralling discontinuous abrasive rib means, said hub comprising a radial flange at one end, and a clamping ring at the other end for clamping said wedges and abrasive segments together.

8. An abrasive member of the nature described; a cylindrical hub adapted for mounting on a spindle, a plurality of annular wedge members mounted on said cylindrical hub and defining right and left hand spiralling groove means, abrasive segments mounted in said groove means and defining right and left hand spiralling discontinuous abrasive rib means, said hub comprising a radial flange at one end, a clamping ring at the other end for clamping said wedges and abrasive segments together, all of said wedge means having the same included angle between their opposite faces, and there being adapter wedge means adjacent each of said flange and clamping ring having half the said included angle between their opposite faces.

9. In an abrasive member of the nature described; a cylindrical hub portion having a radial flange at one end and adapted for mounting on a spindle for being driven in rotation, a plurality of annular wedge members open at their thin sides mounted on said hub so that adjacent of the said wedge members have their open portions positioned diametrically opposite each other, a plurality of annular abrasive sectors open at one side mounted between said wedge members, each sector having its open side diametrically opposite the open side of the adjacent wedge member and being disposed with one end on one side of the wedge member and its other end on the other side of the wedge member, and means for clamping said wedge members and segments against said flange.

10. In an abrasive member of the nature described; a cylindrical hub portion having a radial flange at one end and adapted for mounting on a spindle for being driven in rotation, a plurality of annular wedge members open at their thin sides mounted on said hub so that adjacent of the said wedge members have their open portions positioned diametrically opposite each other, a plurality of annular abrasive sectors open at one side mounted between said wedge members, each sector having its open side diametrically opposite the open side of the adjacent wedge member and being disposed with one end on one side of the wedge member and its other end on the other side of the wedge member, and means for clamping said wedge members and segments against said flange, said clamping means comprising a clamping ring on the end of the hub opposite the said flange and clamping bolts extending through said ring, wedge members, and segments into said flange.

11. In an abrasive member of the nature described; a cylindrical hub portion having a radial flange at one end and adapted for mounting on a spindle for being driven in rotation, a plurality of annular wedge members open at their thin sides mounted on said hub so that adjacent of the said wedge members have their open portions positioned diametrically opposite each other, a plurality of annular abrasive sectors open at one side mounted between said wedge members, each sector having its open side diametrically opposite the open side of the adjacent wedge member and being disposed with one end on one side of the wedge member and its other end on the other side of the wedge member, and means for clamping said wedge members and segments against said flange, said clamping means comprising a clamping ring on the end of the hub opposite the said flange and clamping bolts extending through said ring, wedge members, and segments into said flange, there being an adapter wedge member adjacent said clamping ring and also adjacent said flange, each having half the included angle of the first-mentioned wedge members, whereby the planes of symmetry of said first-mentioned wedge members are perpendicular to the axis of said hub.

12. An arrangement as set forth in claim 9 in which each wedge member is on the order of one-half inch thick at the thickest part and each abrasive sector is about 270° in extent.

13. An arrangement as set forth in claim 1 in which means are provided for halting the relative reciprocation of the support and member after one traversal thereof.

14. An arrangement as set forth in claim 1 in which means are provided for adjusting the said predetermined speed of relative reciprocation of said support and member.

15. The method of grinding whereby one and the same wheel is utilized for both finish grinding and for grinding a spot pattern on a workpiece comprising; trueing the periphery of the wheel to a smooth working surface, and reciprocating the workpiece and wheel relatively for a normal grinding operation, trueing shallow grooves in the wheel to form spaced upstanding areas thereon, reciprocating the workpiece relative to the wheel at a second predetermined speed and for a single pass to impart a spot pattern to the ground surface thereof, and repeating the steps for subsequent workpieces for a repetitive cycle of operations.

16. In an arrangement for working a smooth surface to form a spot pattern thereon; a support for the workpiece having the said surface, a rotatable abrasive member for working the surface, said member comprising rib means of abrasive material projecting from said member and arranged in right and left hand spiral paths, each said rib means being discontinuous at each alternate point of intersection of the said spiral path pertaining thereto with the spral path of the other hand, means for rotating said member at working speed, and means for moving said support and member relatively linearly at such a speed that each segment of each rib means abrades a portion of said workpiece entirely separate from the portion of the workpiece abraded by the others of the said segments.

17. In an arrangement for working a smooth surface to form a spot pattern thereon; a support for the workpiece having the said surface, a rotatable abrasive member for working the surface, said member comprising a hub portion for being secured to a spindle and having a peripheral surface parallel to the surface to be spotted, abrasive areas on said peripheral surface defining spaced segments of right and left hand spirals, each such spiral extending the full axial length of said abrasive member, means for rotating said member at working speed, and means for moving said member and workpiece linearly at such a speed that each said segment abrades a portion of said workpiece entirely separate from the portion abraded by the others of said segments.

18. In an abrading wheel of the nature described; a hub portion adapted for mounting on a spindle for being driven in rotation, a peripheral working portion on said wheel, and abrading means on said peripheral portion comprising rib means of abrading material arranged in right and left hand intersecting spiral paths, each said means extending the full axial length of said wheel and at least one of each rib means being discontinuous at each point of intersection of the spiral path pertaining thereto with the said spiral path of the other hand, said rib means being flat and thin relative to the space therebetween.

19. In an abrading wheel of the nature described; a hub portion adapted for mounting on a spindle for being driven in rotation, a peripheral working portion on said wheel, and abrading means on said peripheral portion comprising rib means of abrading material arranged in intersecting right and left hand spiral paths, each said rib means extending the full axial length of the wheel and each said rib means being discontinuous at every alternate point of intersection of the path of the said spiral path thereof with the spiral path of the other hand, said rib means being flat and thin relative to the space therebetween.

20. The method of spotting a smoothly finished surface to provide for a regular and uniform spot pattern thereon which comprises; rotating at a predetermined speed an abrading wheel member having discontinuous upstanding abrading surfaces thereon arranged in right and left hand spiral paths with the discontinuities of the said ribs occurring at the points of intersection of the said paths thereof, moving the surface to be worked and the abrading wheel member relatively at a predetermined speed with the wheel member in contact with the surface, and halting the said relative movement after one complete traversal of the surface to be worked by the said abrading wheel member.

21. The method of spotting a smoothly finished surface to provide for a regular and uniform spot pattern thereon which comprises; rotating at a predetermined speed an abrading wheel member having discontinuous upstanding abrading surfaces thereon arranged in right and left hand spiral paths with the discontinuities of the said ribs occurring at the points of intersection of the said paths thereof, moving the surface to be worked and the abrading wheel member relatively at a predetermined speed with the wheel member in contact with the surface, and halting said relative movement after one complete traversal of the surface to be worked by the said abrading wheel member, the speed of the said relative movement being so selected relative to the speed of rotation of said abrading wheel member that the said surface and abrading wheel member move relatively about the same distance as the lead of one of the segments of said ribs in the interval that the said abrading wheel member rotates through the angle occupied by one of said segments.

22. A method of grinding a machine tool way or similar surface to provide a true bearing surface having a pattern of oil spots thereon with one and the same grinding wheel which comprises; trueing the periphery of a grinding wheel to a smooth working surface, grinding the way to a smooth finish with the trued grinding wheel, dressing right and left hand spiralling grooves in the periphery of the grinding wheel thus forming on the wheel a regular pattern of raised spots, and making a single pass along the length of the way with the dressed grinding wheel with the relative lineal speed between the wheel and way in relation to the rotational speed of the wheel being such that each area ground by each said raised spot is independent from all other such areas.

23. A method of working a machine tool way or the like to provide a smooth bearing surface thereon having an oil spot pattern with one and the same grinding wheel which comprises; trueing a grinding wheel to a smooth working surface, grinding the way with the trued grinding wheel to the desired finish and accuracy, reducing the speed of the grinding wheel, dressing right and left hand spiralling groove means in the periphery of the grinding

wheel thus forming on the wheel a regular pattern of raised spots, running the grinding wheel at grinding speed, and taking a single pass along the finished way with the dressed grinding wheel with the relative lineal speed between the work and wheel being great enough that the said raised spots grind spaced areas on the work whereby a spot pattern is imparted to the surface of the way.

24. In an abrading wheel of the nature described; a hub portion adapted for mounting on a spindle for being driven in rotation, a peripheral working portion on said wheel, abrading rib means upstanding from the periphery of the wheel, said rib means arranged in intersecting right and left hand spiral paths, each said rib means being discontinuous at every alternate point of intersection of the said spiral path thereof with the spiral path of the other hand, each said rib means extending for about 270° about the said wheel between consecutive points of discontinuity of the said rib means, each rib means having a lead of about one-half inch between the said consecutive points of discontinuity thereof, and said rib means being flat and thin relative to the space therebetween.

25. In an abrading wheel of the nature described; a hub portion adapted for mounting on a spindle for being driven in rotation, a peripheral working portion on said wheel, said working portion comprising abrading means consisting of right and left hand spiral rib means upstanding from the periphery of the wheel, each said rib means being discontinuous at every alternate point of intersection, a section of the spiral path thereof with the spiral path of the other of said rib means, the said peripheral portion of said wheel being V-shaped in cross section.

References Cited in the file of this patent

UNITED STATES PATENTS

214,970	Tripler	Apr. 29, 1879
278,608	Schrebler	May 29, 1883
348,225	Maloy	Aug. 31, 1886
424,763	Cunningham	Apr. 1, 1890
539,464	Whitaker	May 21, 1895
569,136	Jones	Oct. 6, 1896
625,706	Sherman	May 23, 1899
847,616	Smith	Mar. 19, 1907
1,358,533	Elston	Nov. 9, 1920
1,496,522	Canning	June 3, 1924
1,501,229	Olson	July 15, 1924
1,561,231	Hatz	Nov. 10, 1925
1,773,386	Burgess	Aug. 19, 1930
1,786,168	Patton	Dec. 23, 1930
1,882,956	Sandler	Oct. 18, 1932
1,908,262	Leis	May 9, 1933
1,976,233	Kosfeld	Oct. 9, 1934
2,002,792	Sart	May 28, 1935
2,064,322	Ruppert	Dec. 15, 1936
2,321,441	Webber	June 8, 1943
2,436,466	Wilson	Feb. 24, 1948
2,450,157	Peckett	Sept. 28, 1948

FOREIGN PATENTS

456,152	Great Britain	Nov. 4, 1936
746,064	Germany	Dec. 15, 1944