Jan. 1, 1929. 1,697,158

A. J. BASTIAN

GEAR WINDING MACHINE

Filed Sept. 2, 1926 5 Sheets-Sheet 1

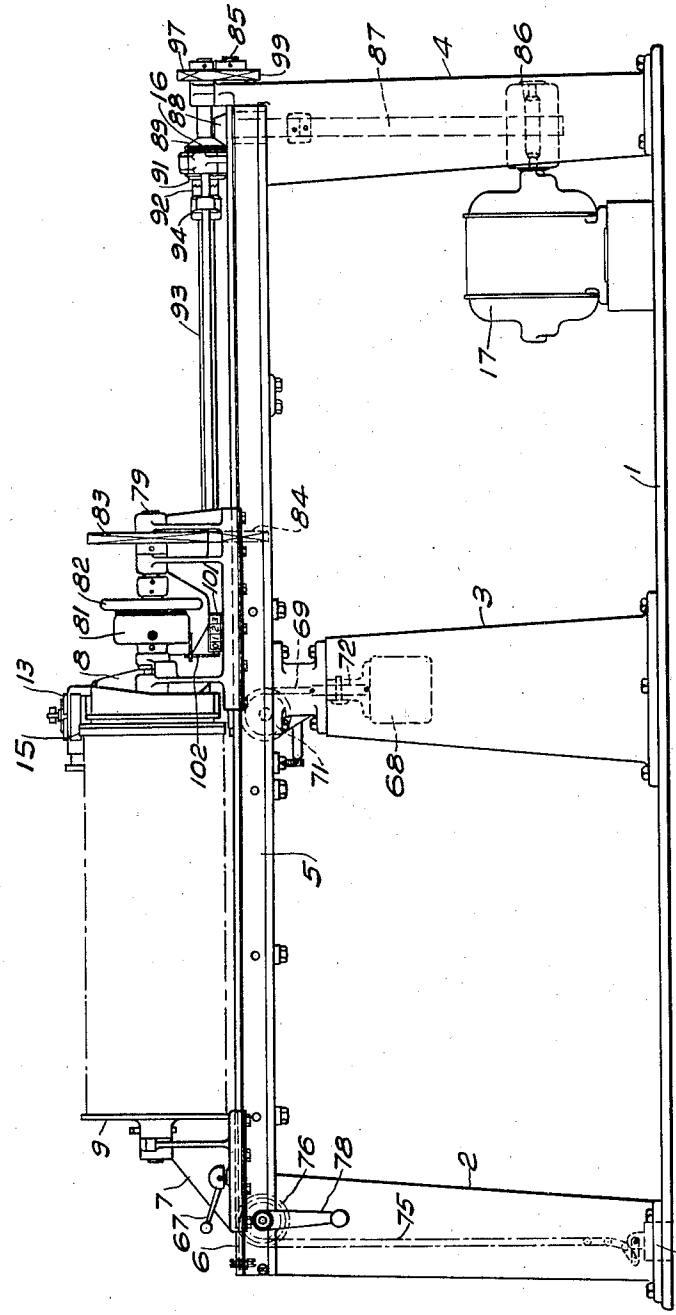

Fig. 1.

WITNESSES:
E. A. McCloskey
W. D. O'Connor

INVENTOR
Arthur J. Bastian.
BY
Wesley G. Carr
ATTORNEY

Jan. 1, 1929. 1,697,158

A. J. BASTIAN

GEAR WINDING MACHINE

Filed Sept. 2, 1926 5 Sheets-Sheet 2

Fig. 2.

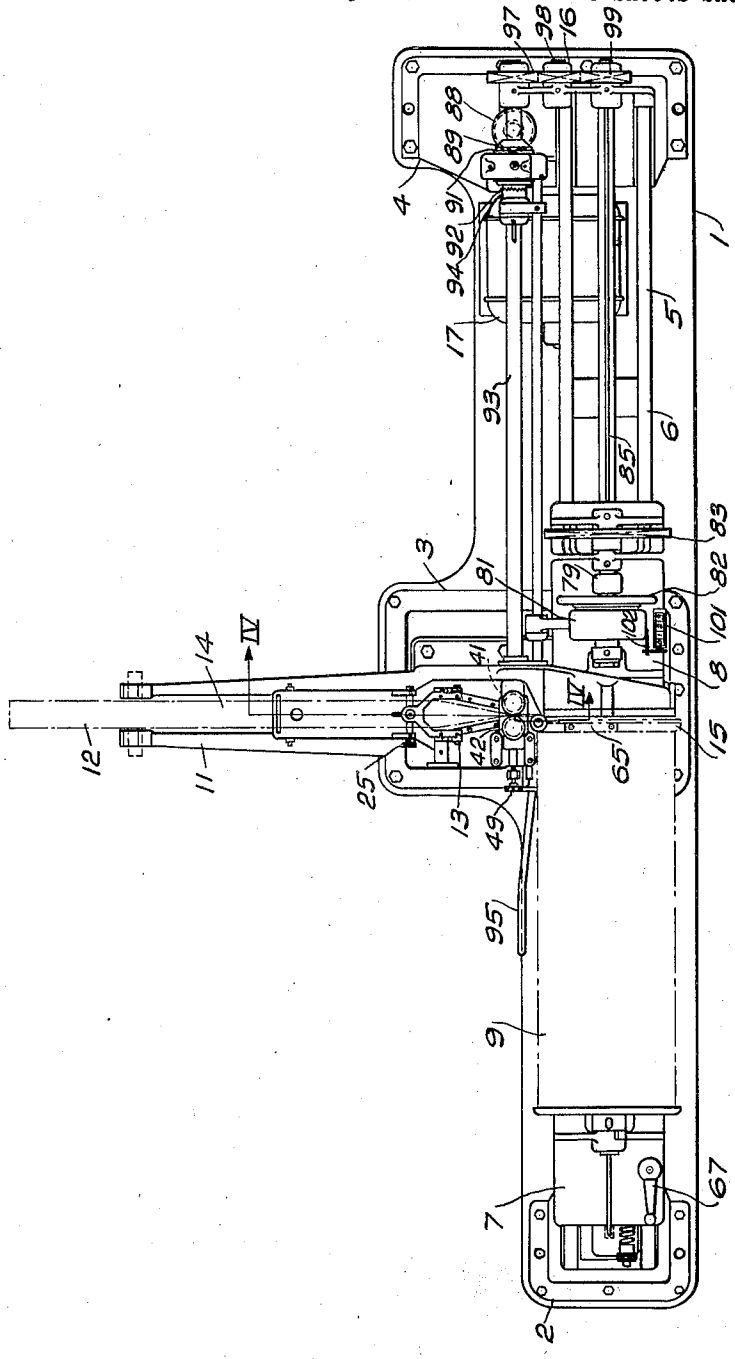

WITNESSES:

E. A. McCloskey

W. D. O'Connor

INVENTOR

Arthur J. Bastian.

BY

Wesley G. Carr

ATTORNEY

Jan. 1, 1929. 1,697,158

A. J. BASTIAN

GEAR WINDING MACHINE

Filed Sept. 2, 1926 5 Sheets-Sheet 3

Fig. 3.

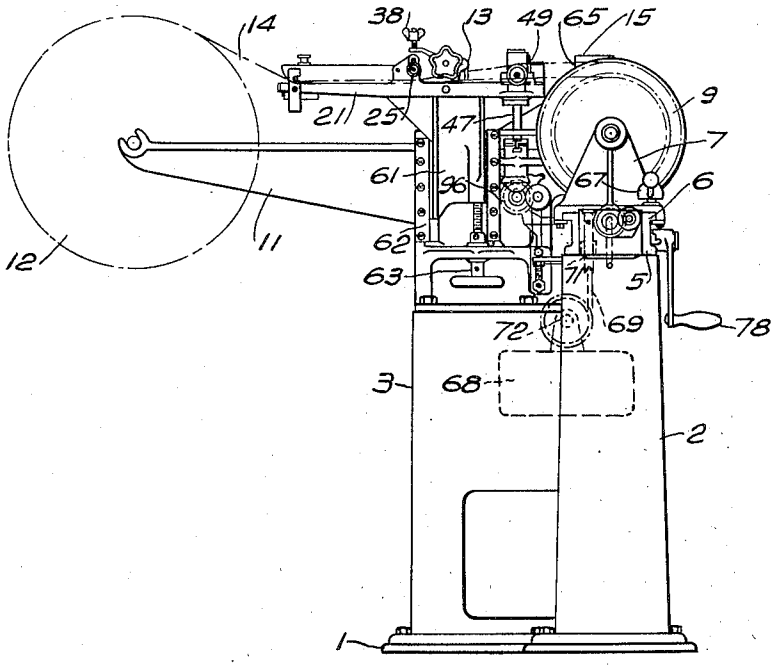

WITNESSES:
E. G. McCloskey.
W. D. O'Connor

INVENTOR
Arthur J. Bastian.
BY
Wesley G. Carr
ATTORNEY

Jan. 1, 1929. 1,697,158

A. J. BASTIAN

GEAR WINDING MACHINE

Filed Sept. 2, 1926 5 Sheets-Sheet 4

Fig. 4.

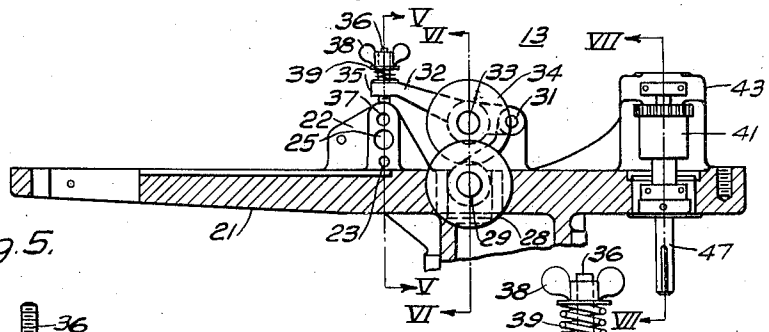

Fig. 5.

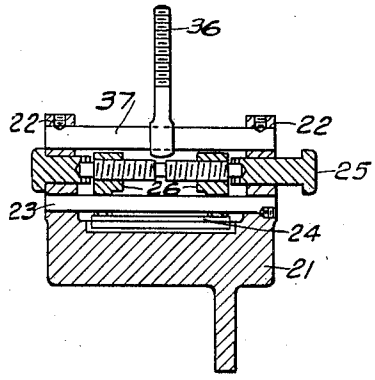

Fig. 6.

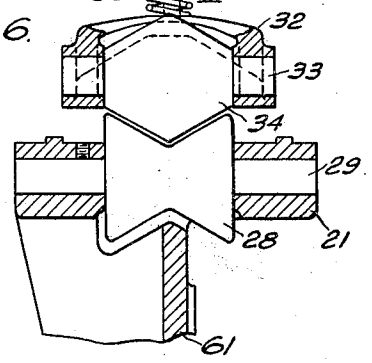

Fig. 7.

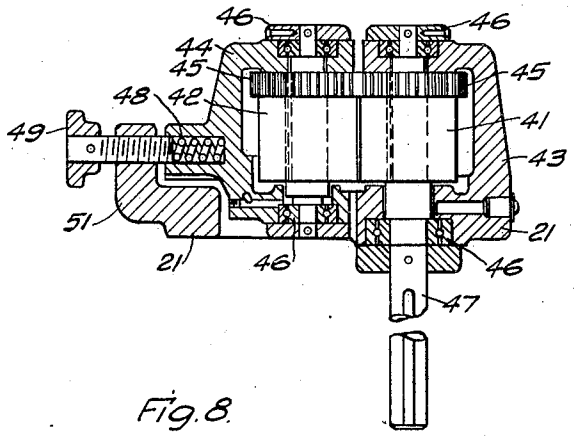

Fig. 8.

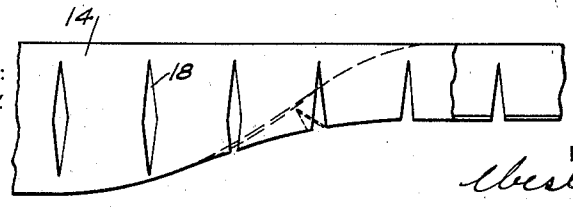

WITNESSES:
E. A. McCloskey.
W. D. O'Connor

INVENTOR
Arthur J. Bastian.

BY
Mosley & Barr
ATTORNEY

Jan. 1, 1929. 1,697,158

A. J. BASTIAN

GEAR WINDING MACHINE

Filed Sept. 2, 1926 5 Sheets-Sheet 5

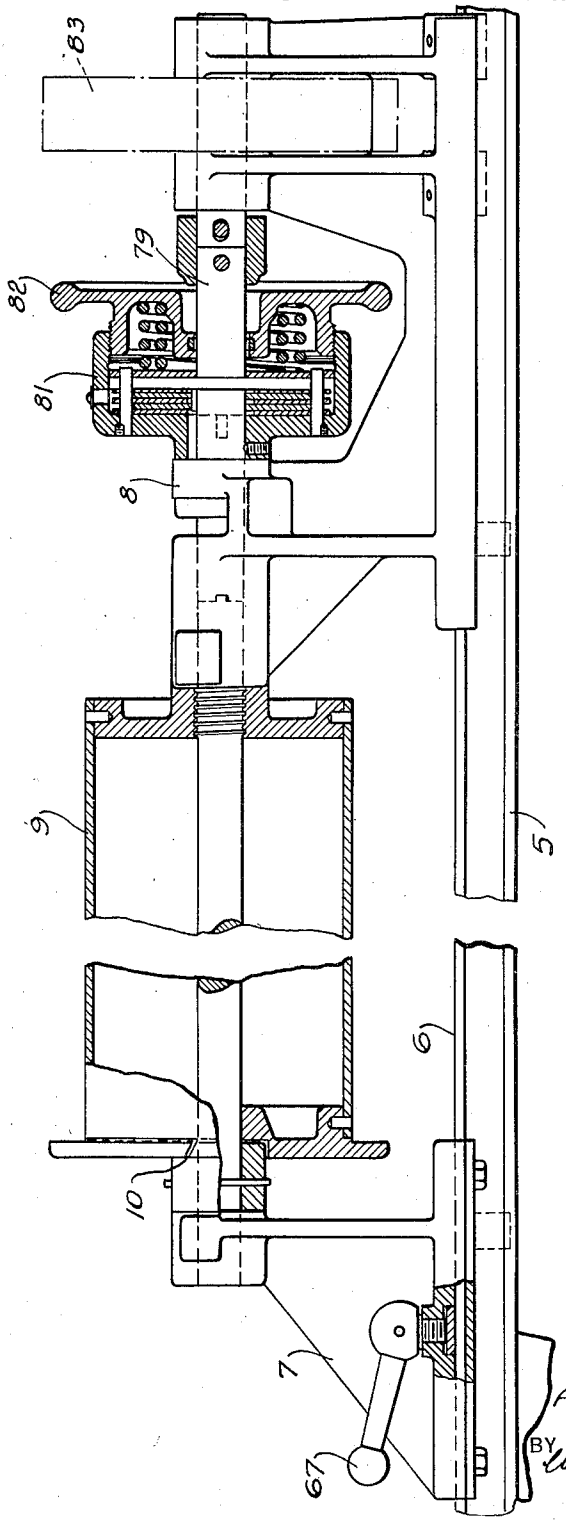

Fig. 9.

INVENTOR
Arthur J. Bastian
BY Everley G. Carr
ATTORNEY

Patented Jan. 1, 1929. 1,697,158

UNITED STATES PATENT OFFICE.

ARTHUR J. BASTIAN, OF WILKINSBURG, PENNSYLVANIA, ASSIGNOR TO WESTINGHOUSE ELECTRIC & MANUFACTURING COMPANY, A CORPORATION OF PENNSYLVANIA.

GEAR-WINDING MACHINE.

Application filed September 2, 1926. Serial No. 133,284.

My invention relates to winding machines, and particularly to machines for winding fibrous material in the form of a helix.

One object of my invention is to provide a machine for folding and winding a strip of treated fibrous material on edge to form a cylindrical or helical article that may be pressed or molded into a composite ring such as a gear rim.

Another object of my invention is to provide a method of manufacturing composite articles from strips of fibrous material that is simple, lends itself to rapid production and requires very little hand labor.

In a copending application of H. C. Bierman and A. J. Bastian, Serial No. 665,374, filed September 28, 1923, is described a composite gear blank that is made by winding a strip of treated fibrous material on edge on a metal center in such manner that crimping and overlapping of the material is avoided.

My present invention resides in a machine for winding the fibrous strips in the shape of a helix on a mandrel for use in making the composite articles described in this copending application. The strips of fibrous material have spaced diamond-shaped openings centrally located therein and are furnished in rolls to the winding machine embodying my invention.

The strip is fed into the machine between guide fingers and passed between a concave and a convex roller. These rollers serve to crease the strip longitudinally substantially along its center line. After passing through the creasing rollers, the strip is passed between two parallel rollers having their axes at right angles to the axes of the creasing rollers. These rollers serve to complete the folding operation and deliver the strip folded with the spaced notches in the folded edge. The folded strip is then passed through a slot in a guide plate that delivers it to a winding mandrel on edge and with the folded edge adjacent the mandrel.

During the winding operation, the notches in the folded edge close, thereby compensating for the difference between the circumference of the mandrel and the outside circumference of the composite article, without causing the material to crimp or overlap.

After the winding operation has been completed, the material may be removed from the mandrel and cut into rings of suitable thickness. These rings may then be subjected to heat and pressure to mould them into gear blanks or other articles, as described in the hereinbefore mentioned copending application.

In the drawings, Figure 1 is a view in side elevation of a winding machine embodying my invention;

Fig. 2 is a plan view of the winding machine of Fig. 1;

Fig. 3 is a view in end elevation of the machine of Figs. 1 and 2;

Fig. 4 is a view in cross-section of the folding device embodied in the winding machine, taken on the line IV—IV of Fig. 2;

Fig. 5 is a view, in cross-section, of the folding device, taken on the line V—V of Fig. 4;

Fig. 6 is a view, in cross-section, taken on the line VI—VI of Fig. 4;

Fig. 7 is a view, in cross-section, taken on the line VII—VII of Fig. 4;

Fig. 8 is an elevational view of a strip of fibrous material, punched and partially folded in accordance with my invention; and

Fig. 9 is an enlarged view, partially in section and partially in elevation, of the winding mandrel and its supporting mechanism.

Referring to the drawings, the winding machine comprises a base 1 upon which are mounted upright pedestals 2, 3 and 4 that support a bed plate 5. The bed plate 5 is provided with ways 6 for slidably receiving a tail stock 7 and a head stock 8 that have rotatably supported therebetween a mandrel 9 as shown in Fig. 9.

A rack 11 for supporting a roll 12 of fibrous strip material is mounted upon the pedestal 3. A folding device 13 for receiving a strip 14 of fibrous material having centrally located spaced diamond-shaped openings 18 therein, from the roll 12, folding it and delivering it to a guide plate 15, is also mounted on the pedestal 3 between the rack 11 and the mandrel 9. The guide plate 15 encircles the mandrel 9 and serves to guide the folded strip onto the mandrel 9 on edge. A driving mechanism 16 is provided in the pedestal 4 for transmitting power from a motor 17 to the folding device 13 and the head stock 8.

Referring especially to Figs. 4, 5, 6 and 7, the folding device 13 comprises a slide 21 upon which are mounted bracket members 22 that support a guide pin 23. The guide pin

23 is spaced from the slide 21 a sufficient distance to provide an opening 24 for receiving the strip 14.

An adjusting screw 25 is journalled in the brackets 22 and has threaded engagement with a pair of guide fingers 26 that constitute the sides of the opening 24. By manipulating the adjusting screw 25, the guide fingers 26 may be moved from side to side, and the position of the strip 14, with respect to the center line of the slide 21, may be accurately adjusted. A creasing roller 28 having a substantially concave surface is journalled upon a pin 29 that extends transversely of the slide 21 in such manner that the face of the roller 28, at its point of least diameter, is substantially flush with the top of the slide 21.

A pair of brackets 31, integral with the slide 21, serve to pivotally support a yoke 32. A pin 33 is mounted in the yoke 32 parallel to, and substantially above, the pin 29. A creasing roller 34, having a convex surface substantially complementary to the surface of the roller 28, is journalled on the pin 33 to cooperate with the roller 28. A boss 35 is provided on the yoke 32 at the end opposite to that which is pivoted to the support 31. The boss 35 is drilled to receive a threaded rod 36 that is pivotally secured to the brackets 22 by means of a pin 37.

A wing nut 38 has threaded engagement with the rod 36 and a coil spring 39 is interposed between the wing nut 38 and the boss 35. By means of the wing 38, the tension in the spring 39 may be regulated, thereby adjusting the pressure that the rollers 28 and 34 exert upon the strip 14 as it is passed between them.

A pair of feeding rollers 41 and 42 are mounted in a stationary bracket 43 and a slidable bracket 44, respectively, on the slide 21. The rollers 41 and 42 have their axes parallel to each other and substantially at right angles to the axes of the creasing rollers 28 and 34, and are mounted in a position to receive the strip 14 after it has passed between the rollers 28 and 34.

The rollers 41 and 42 are provided with cooperating pinions 45 at their upper ends and are journalled in anti-friction bearings 46. A vertical drive shaft 47 serves to drive the roller 41 and it in turn drives the roller 42 by means of the cooperating pinions 45.

The slidable bracket 44, in which the roller 42 is mounted, is provided with a spring 48 for biasing it towards the roller 41. An adjusting screw 49 is threaded in a bracket 51 on the slide 21 and bears against the spring 48. By means of the adjusting screw, the force exerted by the spring 48 against the bracket 44 may be adjusted, thereby making it possible to maintain the desired pressure upon the strip 14 as it is passed between the rollers 41 and 42.

Referring to Fig. 3, the slide 21 is provided with a depending portion 61 that has slidable engagement with guides 62 on the pedestal 3. An adjusting screw 63 is provided for adjusting the vertical position of the folding device 13 to accommodate mandrels of different diameters. The guide plate 15 is provided with a slot 65 through which the strip 14 passes after it leaves the feeding rollers 41 and 42.

The tail stock 7 is slidably mounted upon the ways 6 and may be locked in any desired position by means of a locking lever 67 that engages the way 6 as shown in Fig. 9. A weight 68 is suspended within the pedestal 3 by means of a cord 69 that is attached at one end to the tail stock 7. The cord 69 passes over a pulley 71 at the top of the pedestal 3 and under a pulley 72 on the weight 68, and is secured, at its other end, to the top of the pedestal 3. The weight 68 serves to bias the tail stock 7 and, therefore, the mandrel 9 to the right, as seen in Fig. 1, thereby pressing the strip 14 against the guide plate 15 as it is wound on edge upon the mandrel 9.

A chain 75 is secured at one end to the head stock 8, which is also slidably mounted on the ways 6, passes over a sprocket wheel 76 at the top of the pedestal 2 and has, at its other end, a weight 77 that serves to bias the head stock 8 to the left, as seen in Fig. 1.

A crank 78 is provided for turning the sprocket wheel 76 and thereby moving the head stock 8 upon the ways 6, for the purpose hereinafter explained.

The weight 77 serves to hold the head stock firmly against the end of the mandrel 9, but it is not large enough to interfere with the biasing action of the weight 68.

The head stock 8 is provided with a spindle 79 having mounted thereon a friction clutch 81 for limiting the torque exerted upon the mandrel 9. A hand-wheel 82 is provided for adjusting the frictional resistance of the clutch 81. A gear-wheel 83 is mounted upon the head stock spindle 79 and engages a pinion 84 that is slidably mounted upon a drive shaft 85.

The motor 17 drives the winding machine by means of a worm gear 86 and a vertical shaft 87. A bevel pinion 88 at the top of the shaft 87 engages a similar bevel pinion 89 that is mounted upon a sleeve 91. The sleeve 91 is provided with clutch teeth 92 and is journalled upon a driving shaft 93. The driving shaft 93 has slidably mounted thereon a collar 94 that is provided with clutch-teeth complementary to the clutch teeth 92 on the sleeve 91.

A hand lever 95 is provided for moving the collar 94 longitudinally with respect to the shaft 93, thereby engaging or disengaging the cooperating clutch teeth. When the clutch teeth are engaged, the shaft 93 is caused to rotate with the sleeve 91 and drives the feeding roller shaft 47 by means of the cooperating bevel pinions 96. The driving

shaft 93 is provided with a gear-wheel 97 that drives an idler pinion 98 that, in turn, engages a gear-wheel 99 on the shaft 85.

A revolution counter 101 is secured to the head stock 8 and engages a finger 102 on the clutch 81 for the purpose of counting the turns of the strip material 14 as it is wound upon the mandrel 9.

The operation of the winding machine is briefly as follows: The roll 12 of fibrous material is placed in the rack 11 and the end of the strip 14 is passed through the opening 24 between the slide 21 and the guide pin 23 and also between the guide fingers 26. The creasing roller 34 is then lifted slightly and the end of the strip 14 passed between it and the creasing roller 28.

After passing between the creasing rollers, the end of the strip 14 is folded double as shown in Fig. 8, and passed between the feeding rollers 41 and 42. From the feeding rollers it is passed through the slot 65 in the guide plate 15, and is attached to the left end of the mandrel 9, by means of the slot 10, as seen in Figs. 1 and 9. The machine is started by energizing the motor 17 and engaging the collar 94 with the sleeve 91 by means of the hand lever 95. The feeding rollers 41 and 42 draw the strip through between the creasing rollers 28 and 34 and complete the folding operation thereon. By manipulating the adjusting screw 25, the strip 14 may be adjusted relative to the slide 21 and the rollers 28 and 34 to cause the fold to be made accurately along the center line thereof.

After passing through the rollers, the strip 14 is guided onto the mandrel 9 by means of the slot 65 in the guide plate 15 and is wound on edge, in the manner hereinbefore described. A substantially constant pull is exerted upon the strip 14 by virtue of the fact that the clutch 81 exerts a uniform torque upon the mandrel 9. As successive turns are wound upon the mandrel 9, they are held on edge and pressed into place by the substantially constant pressure that is exerted by the flange at the left end of the mandrel, in the direction of the guide plate 15. Consequently, each additional turn moves the mandrel 9 and the tailstock 7 to the left against the biasing action of the weight 68 and permits the headstock 8 also to move to the left by reason of the force exerted upon it by the weight 77.

Therefore, the mandrel 9 moves to the left gradually, as the strip 14 is wound upon it, until it is completely filled.

By means of the counter 101 the total number of turns placed upon the mandrel may be counted, or the number of turns necessary to make each article counted and a mark inserted in the helical strip to indicate the point at which it is to be cut to divide the cylindrical article into rings or annuli of the desired thickness.

When the mandrel has become filled, the head stock, mandrel and tail stock are moved to the extreme left, as seen in Fig. 1, by rotating the crank 78 and, therefore, the sprocket wheel 76 that is in engagement with the chain 75. The tail stock 7 is then locked in position by means of the locking lever 67 and the head stock 8 may be moved to the right a sufficient amount to remove the mandrel 9. An empty mandrel may then be put in place and the tail stock 7 released and allowed to move to the right, under the action of the weight 68, as hereinbefore described until its left end engages the guide plate 15.

It is evident, from the foregoing description of my invention, that a winding machine constructed in accordance therewith is capable of rapidly folding and winding a fibrous strip on edge in the form of a helix and that such a machine is simple to operate and adapted for rapid production with a minimum of hand labor and attention.

Although I have described a specific embodiment of my invention, it will be obvious to those skilled in the art that various modifications may be made in the details of construction without departing from the spirit and scope of my invention as set forth in the appended claims.

I claim as my invention:

1. The method of making a composite article comprising a helical strip of fibrous material that comprises folding said strip lengthwise thereof and winding the folded strip on edge upon a mandrel.

2. The method of making a composite article comprising a helical strip of fibrous material that comprises forming openings in said strip, folding it substantially along its center line and winding the folded strip on edge upon a mandrel.

3. The method of making a composite article comprising a helical strip of folded fibrous material that comprises winding said strip on its folded edge upon a mandrel.

4. The method of making a composite article comprising a helical strip of fibrous material that comprises winding a strip of fibrous material having notches therein on edge.

5. The method of making non-metallic gear rims that comprises folding a strip of fibrous material, having diamond-shaped openings therein, along its center line and winding the folded strip upon a mandrel on edge and in the shape of a helix with the folded edge constituting the inside of the gear rim.

6. The method of making non-metallic gear rims that comprises winding a folded strip of fibrous material on its folded edge upon a mandrel.

7. The method of making a composite article from a strip of fibrous material that comprises punching diamond-shaped holes

substantially in the center of the strip, folding the strip lengthwise and winding it on edge in the shape of a helix.

8. The method of making a composite article from a strip of fibrous material that comprises punching diamond-shaped holes substantially in the center of the strip, folding the strip lengthwise, winding it on edge in the shape of a helix, counting the turns and marking the helical strip to indicate a predetermined number of turns.

9. The method of making a composite article comprising a helical strip of fibrous material that comprises folding a strip of said material substantially along its center line and winding the folded strip on edge in the shape of a helix.

10. The method of making a composite article comprising a helical strip of fibrous material that comprises folding a strip of said material sbstantially along its center line and winding the folded strip on edge in the shape of a helix with the folded edge constituting the inner surface of the article.

11. The method of making non-metallic gear rims from a strip of fibrous material that comprises punching diamond-shaped holes substantially in the center of the strip, folding said strip substantially along its center line, winding the strip on edge in the shape of a helix and counting the turns.

12. A machine for winding a fibrous strip that comprises guide members for centering the strip, means for folding the strip substantially along its center line, a mandrel for receiving the strip on edge, and means for guiding the strip onto the mandrel in the shape of a helix.

13. A machine for winding a fibrous strip on edge in the shape of a helix that comprises means for folding the strip, a mandrel, and means for guiding the strip onto the mandrel.

14. A machine for winding a fibrous strip on edge in the shape of a helix that comprises means for folding the strip lengthwise, a mandrel and a guide member for guiding the strip onto the mandrel.

15. In a machine for winding strip material on edge, a bed member, a head stock and a tail stock slidably mounted on the bed member, a guide plate having a central opening and a guide slot therein also mounted on the bed member, a mandrel rotatably mounted between the head stock and tail stock and extending through the opening in the guide plate, means for biasing the tail stock toward the guide plate, and means for biasing the head stock toward the tail stock.

16. In a machine for winding strip material on edge, a bed member, means for holding the strip material substantially along its center line that comprises guide fingers for centering the material, creasing rollers and folding rollers, a guide plate having a guide slot and a central opening, a head stock and a tail stock slidably mounted on the bed member, a mandrel rotatably mounted between the head stock and the tail stock and extending through the opening in the guide plate, means for biasing the tail stock toward the guide plate, means for biasing the head stock toward the tail stock, means for driving the mandrel and the folding rollers, and means for counting the revolutions of the mandrel.

In testimony whereof, I have hereunto subscribed my name this 30th day of August, 1926.

ARTHUR J. BASTIAN.