(12) INTERNATIONAL APPLICATION PUBLISHED UNDER THE PATENT COOPERATION TREATY (PCT)

(19) World Intellectual Property Organization
International Bureau

(43) International Publication Date
3 September 2009 (03.09.2009)

PCT

(10) International Publication Number
WO 2009/106535 A1

(51) International Patent Classification:
B65D 5/68 (2006.01) *B65D 5/54* (2006.01)
B65D 5/30 (2006.01)

(21) International Application Number:
PCT/EP2009/052206

(22) International Filing Date:
25 February 2009 (25.02.2009)

(25) Filing Language: English

(26) Publication Language: English

(30) Priority Data:
0803665.9 28 February 2008 (28.02.2008) GB

(71) Applicant *(for AE, AG, AU, BB, BH, BW, BZ, CA, CY, EG, GB, GD, GH, GM, IE, IL, KE, KN, LC, LK, LS, MT, MW, MY, NA, NG, NZ, OM, PG, SC, SD, SG, SL, SZ, TT, TZ, UG, VC, ZA, ZM, ZW only)*: **UNILEVER PLC** [GB/GB]; Unilever House, 100 Victoria Embankment, London, Greater London EC4Y 0DY (GB).

(71) Applicant *(for all designated States except AE, AG, AU, BB, BH, BW, BZ, CA, CY, EG, GB, GD, GH, GM, IE, IL, IN, KE, KN, LC, LK, LS, MT, MW, MY, NA, NG, NZ, OM, PG, SC, SD, SG, SL, SZ, TT, TZ, UG, US, VC, ZA, ZM, ZW)*: **UNILEVER N.V.** [NL/NL]; Weena 455, NL-3013 AL Rotterdam (NL).

(71) Applicant *(for IN only)*: **HINDUSTAN UNILEVER LIMITED** [IN/IN]; Hindustan Lever House, 165/166 Backbay Reclamation, Maharashtra, Mumbai 400 020 (IN).

(72) Inventors; and
(75) Inventors/Applicants *(for US only)*: **SANT'ANA CACERES, Patrice** [BR/BR]; Unilever brazil Ltda, Av. Invernada 401, CEP 13271-450 Valinhos - SP (BR). **NENEVE, Alessandra, Erean, Carvalho** [BR/BR]; Rue Rodolfo Bernardelli, 232 - Uberaba, PR 51850-010 Curitiba (BR). **SILVA, Joao Carlos da** [BR/BR]; Unilever brazil Ltda, Av. Invernada 401, CEP 13271-450 Valinhos - SP (BR). **TESSER, Jociane** [BR/BR]; R. Parintis 990, apto 21, Vila Isabel, PR 80320-270 Curitiba (BR). **UTEMBERGUE, Anderson** [BR/BR]; Unilever brazil Ltda, Av. Invernada 401, CEP 13271-450 Valinhos - SP (BR).

(74) Agent: **MULDER, Cornelis, Willem, Reinier**; Unilever PLC, Unilever Patent Group, Colworth House, Sharnbrook, Bedford Bedfordshire MK44 1LQ (GB).

(81) Designated States *(unless otherwise indicated, for every kind of national protection available)*: AE, AG, AL, AM, AO, AT, AU, AZ, BA, BB, BG, BH, BR, BW, BY, BZ, CA, CH, CN, CO, CR, CU, CZ, DE, DK, DM, DO, DZ, EC, EE, EG, ES, FI, GB, GD, GE, GH, GM, GT, HN, HR, HU, ID, IL, IN, IS, JP, KE, KG, KM, KN, KP, KR,

[Continued on next page]

(54) Title: RECLOSABLE CARTON

Fig.4D.

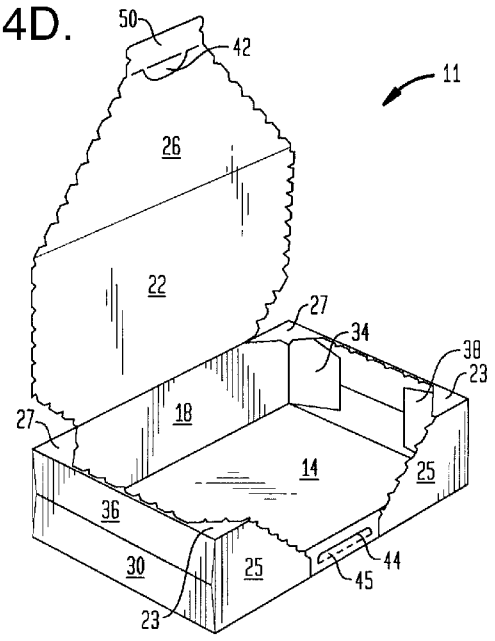

(57) Abstract: A reclosable carton (11) is provided which may contain objects nearly the size of the carton that can be readily dispensed and where the carton can be conveniently re- closed by a user. A specific pattern of tear lines on the top (17) and front (19) panels allows easy opening and re-closing and allows for a reduction in packaging material usage to save production costs. The reclosable carton design reduces the risk of tearing other areas of the carton and maintains its integrity when it is opened by a user.

WO 2009/106535 A1

KZ, LA, LC, LK, LR, LS, LT, LU, LY, MA, MD, ME, MG, MK, MN, MW, MX, MY, MZ, NA, NG, NI, NO, NZ, OM, PG, PH, PL, PT, RO, RS, RU, SC, SD, SE, SG, SK, SL, SM, ST, SV, SY, TJ, TM, TN, TR, TT, TZ, UA, UG, US, UZ, VC, VN, ZA, ZM, ZW.

(84) **Designated States** *(unless otherwise indicated, for every kind of regional protection available)*: ARIPO (BW, GH, GM, KE, LS, MW, MZ, NA, SD, SL, SZ, TZ, UG, ZM, ZW), Eurasian (AM, AZ, BY, KG, KZ, MD, RU, TJ, TM), European (AT, BE, BG, CH, CY, CZ, DE, DK, EE, ES, FI, FR, GB, GR, HR, HU, IE, IS, IT, LT, LU, LV, MC, MK, MT, NL, NO, PL, PT, RO, SE, SI, SK, TR), OAPI (BF, BJ, CF, CG, CI, CM, GA, GN, GQ, GW, ML, MR, NE, SN, TD, TG).

Published:

— *with international search report (Art. 21(3))*

Reclosable Carton

The invention relates to a carton and specifically to one that is easily opened and re-closed by a consumer.

Reclosable cartons with front and top panels where each panel has 2 fixed sections and a single openable section that spans a fold line are known. US Patent No. 4,738,365 issued on April 19, 1988 to Prater; US Patent No. 5076439 issued on Dec. 31, 1991 to Kuchenbecker; US Patent No. 5,085,323 issued on Feb. 4, 1992 to Kuchenbecker et al.; EP Patent No. 697340 issued on October 28, 1998 to Inger; and GB Patent No. 1451138 to Carling O'Keefe Limited all describe examples of such cartons. Other related prior art disclosures include Brazil Patent No. MU 8400469-0 U issued to Filho and published on Oct. 25, 2005; and Brazil Patent No. PI 0205132-0 A issued to Bohlen et al. and published on November 25, 2002.

Surprisingly, it was discovered that a reclosable carton could be designed with a top panel having four separated fixed sections and a front panel with two fixed sections. These fixed sections are arranged in a specific relationship that allows easy opening and re-closing and maximizes access to the contents of the carton such as e.g. a soap bar or other items that are approximately as large as the container. Moreover it was unexpectedly discovered that end flap overlap could be minimized to speed carton blank production and conserve materials without the danger of end flap damage when the carton was opened, thus maintaining carton integrity.

According to one aspect of the present invention there is provided a reclosable carton that is formed by folding a cut or stamped blank that includes a front panel and a top panel connected at a fold line where the front and top panels also have two spaced apart tear lines. The spaced apart tear lines define a reclosable

portion extending across the fold line separating the front and top panels. The front reclosable panel has a finger tab connected at a fold line. The blank also includes a back panel connected both to a top panel at a fold line and to a bottom panel at a fold line. A glue panel is also connected to the bottom panel at a fold line, and further includes a locking slit flap connected to the glue panel at a fold line. Each of the front, top, back and bottom panels have opposite end flaps connected at fold lines to each of the front, top, back and bottom panels and each end flap has two spaced apart lateral edges and an axial edge. During assembly of the reclosable carton, the glue panel is attached to a front fixed section with adhesive, and the reclosable portion, finger tab and locking slit flap are kept free of adhesive.

In further detail, and with each of the ensuing features being preferred, each of the tear lines has a first end and a second end, and each of the tear lines intersect the fold line between the top and front panels at a point at least 3 mm from each of the adjacent top panel end flap lateral edges at the first end. Each of the tear lines intersect the fold line between the top panel end flap and the top panel at a distance of at least 3 mm from the nearest end flap lateral edge. Each of the tear lines extend partially along each of the top panel end flap fold lines, wherein each of the tear lines is spaced at least 3 mm from each of the lateral edges of the adjacent top panel end flaps. Furthermore, each of the tear lines intersects the fold line between the top and front panels at a point at least 3 mm from the adjacent top panel end flap lateral edge. Each of the tear lines also intersects the finger tab fold line and each of the spaced apart second ends of the tear lines is positioned at the outermost edge of the finger tab.

In addition the glue panel defines a locking slit, and the front reclosable section has a tuck flap connected to the finger tab at a fold line. The tuck flap is positioned to engage the locking slit when the finger tab is flexed in order to close the reclosable section of the carton after its initial opening along the tear lines.

Preferred embodiments of the invention will now be described by way of example only with reference to the accompanying drawings, wherein like figures represent like features, in which:

- Figure 1 is a top planar view of a preferred embodiment of a sleeve blank shown in Figures 2 - 5 in assembled form;

- Figure 1A is a detailed portion of Figure 1;

- Figure 2 is a perspective view of the assembled carton from the blank shown in Figure 1;

- Figure 3A is a front elevational view of the assembled carton;

- Figure 3B is a rear elevational view of the assembled carton;

- Figure 3C is a side elevational view of the assembled carton.;

- Figure 4A is a perspective view of the assembled carton illustrating the first step in opening the carton when the tab is pulled from the front panel;

- Figure 4B is a perspective view of the assembled carton illustrating the second step in opening the carton when the openable portion 26 is separated from the front panel;

- Figure 4C is a perspective view of the assembled carton illustrating the third step in opening the carton when the openable portion is partially separated from the top panel;

- Figure 4D is a perspective view of the assembled carton illustrating a fourth step in opening the carton when the openable portion is completely separated from the top panel;

- Figure 5A is a perspective view of the assembled carton illustrating the first step in closing the carton when the when tab 50 is flexed upward while pulling openable portions 22 and 26 towards their original closed positions;

- Figure 5B is a perspective view of the assembled carton illustrating the second step in closing the carton when the reclosable portion 22 has been restored to its original closed position;

- Figure 5C is a perspective view of the assembled carton illustrating the third step in closing the carton when tab 50 is flexed further upward to align tuck flap 42 with locking slit 44; and

- Figure 5D is a perspective view of the assembled carton illustrating a fourth step in closing the carton when tuck flap 42 has been inserted in locking slit 44.

Referring to Figures 1 - 3, a carton blank 10 is stamped or cut from paperboard, coated paperboard that is coated with a natural or synthetic waterproof or water resistant material such as polyethylene or other synthetic or natural polymers, wax, other suitable materials or blends thereof. The blank may also be composed of other foldable or hingeable plastic or other suitable materials. If paperboard or coated paperboard is used, the basis weight is preferably between 200 and 450 grams per square meter ("gsm") and more preferably between 250 and 350 gsm. If coated paperboard is used as described above, the coating weight is preferably between 10 and 50 gsm and more preferably between 12 and 25 gsm.

The carton blank is folded to form a reclosable carton 11. The blank 10 includes a front panel 19 and top panel 17 connected at fold line 28 having two spaced apart tear lines 58, 121, 122 and 126. Front panel 19 contains two fixed sections 25 and reclosable section 26. Top panel 17 contains two fixed sections 23, two fixed sections 27 and reclosable section 22. The tear lines define reclosable portions 22 and 26 extending across fold line 28. The front reclosable panel 26 has finger tab 50 connected at fold line 49. The back panel 18 is connected to the top panel 17 at fold line 24. The back panel is also connected to bottom panel 14 at fold line 20 and glue panel 12 is connected to bottom panel 14 at fold line 16. Glue panel 12 has a locking slit flap 45 connected at fold line 46. The front, top, back and bottom panels have opposite end flaps 38, 36, 34, 30 respectively connected at fold lines 37, 35, 33, 32 to each of the front, top, back and bottom panels respectively.

Each end flap has two spaced apart lateral edges and a single axial edge. More specifically, end flap 38 has lateral edges 100 and 104 and axial edge 102, end flap 36 has lateral edges 106 and 110 and axial edge 108, end flap 34 has lateral edges 112 and 116 and axial edge 114, and end flap 30 has lateral edges 118 and 130 and axial edge 120. Upon assembly of the carton from the blank, the glue panel 12 is attached to front fixed sections 25 with a suitable adhesive or optionally other equivalent attachment means such as interlocking tabs etc. The reclosable portions 22, 26, finger tab 50 and locking slit flap 45 are kept free of adhesive during folding and assembly of the carton to allow easy opening.

Each of the tear lines 58, 121, 122 and 126 has a first end 134 adjacent to tear line 122 and a second end 132 adjacent to tear line 126, wherein each of said tear lines intersects the fold line 24 at a point at least 3 mm from each of top panel end flap lateral edges 110 at the first end 134, and wherein each of said tear lines intersects fold lines 35 at a distance of at least 3 mm from axial edge 110. Each

of said tear lines 58 extends partially along each of the fold lines 35. Each of said tear lines is also spaced at least 3 mm from each of the lateral edges 106 of top panel end flaps 36, and each of said tear lines intersects the fold line 28 between the top and front panels at a point at least 3 mm from top panel end flap lateral edge 106. In addition, each of said tear lines intersects the fold line 49 and each of the spaced apart second ends 132 of the tear lines is positioned at edge 200.

The glue panel 12 defines a locking slit 44, and the front reclosable section 26 has a tuck flap 42 connected to the finger tab 50 at a fold line 49, wherein the tuck flap is positioned to engage the locking slit 44 when the finger tab 50 is flexed when the carton is re-closed. In one preferred embodiment, the top panel end flap axial edge 108 and bottom panel axial edge 120 do not overlap in the assembled carton. Preferably the top panel end flap axial edge 108 and bottom panel axial edge 120 overlap by no more than 1 mm in the assembled carton as illustrated in Figures 3A and 3B.

In a preferred embodiment, the top panel 17 of the carton further includes (a) a pair of opposite fixed triangular segments 23 having legs 51, 51'of respective lengths d5, d5' extending along fold line 28 and adjacent legs 52, 52' of respective lengths d3, d3' extending along fold line 35; (b) a pair of opposite fixed triangular segments 27 each having leg 54, 54' of respective lengths d1, d1' extending along fold line 24 and adjacent legs 56, 56' of respective lengths d3, d3' extending along fold line 35; wherein fold line 28 has a length of d6, fold line 35 has a length of d4 and fold line 24 has a length of d2; and wherein:

$$(d1 + d1') / d2 = A \text{ where A is in the range of 0.18 to 0.30;}$$
$$(d3 + d3') / d4 = B \text{ where B is in the range of 0.35 to 0.55; and}$$
$$(d5 + d5') / d6 = C \text{ where C is in the range of 0.15 to 0.26.}$$

Preferably the tear line ends 132, 134 and points where the lines cross fold line 28 are disposed symmetrically between the end flaps, and opposed pair of triangle legs 51, 51' are equal to each other. Similarly opposed pairs of triangle legs 52, 52'; 54, 54' and 56, 56' are also equal to each other as illustrated in Figures 1-3 so as to preferably create a symmetrical opened package. However the present invention also envisages an asymmetrical arrangement where one or more pairs of opposed triangle legs are not equal (i.e. 51 is not equal to 51' etc.) provided the minimum 3 mm distance of a tear line from the nearest adjacent end flap lateral edge is maintained.

As illustrated in Figures 4 A to D, the carton is opened by a user grasping finger tab 50 at its edge 200 and pulling to separate the tab from fixed sections 25 along the portion of tear lines 126 adjacent to edge 200 (Figure 4A). Next reclosable section 26 is separated from fixed sections 25 along the remaining portion of tear lines 126 as the tab is pulled further upwards (Figure 4B). Next reclosable section 22 is separated from fixed sections 23 along tear lines 121 and partially separated from top panel end flap 36 along a portion of tear line 58 as the tab is pulled further (Figure 4C). Finally reclosable section 22 is fully separated from top panel end flap 36 along the remaining portion of tear line 58 and also separated from fixed sections 27 as the carton is completely opened (Figure 4D).

As illustrated in Figures 5 A to D, the carton is closed as the user grasps tab 50, flexing it upward along fold line 49 thereby causing tuck flap 42 to move downward and away from the plane of section 26 while simultaneously pulling sections 22 and 26 back to their original closed position (Figures 5 A to C). Finally, the user inserts tuck flap 42 (not shown) into locking slit 44 thereby completing the closure of the carton (Figure 5D).

While this invention has been described with respect to particular embodiments thereof, it is apparent that numerous other forms and modifications of the

invention will be obvious to those skilled in the art. The appended claims and this invention generally should be construed to cover all such obvious forms and modifications which are within the true spirit and scope of the present invention.

Claims

1. A reclosable carton 11 comprising:

(a) a blank 10 including a front panel 19 and top panel 17 connected at a fold line 28 having two spaced apart tear lines 58, 121, 122, 126 defining a reclosable portion 22, 26 extending across said fold line 28 , the front reclosable panel 26 having a finger tab 50 connected to the front reclosable panel 26 at a fold line 49, a back panel 18 connected to the top panel 17 at a fold line 24 , said back panel connected to a bottom panel 14 at a fold line 20 and a glue panel 12 connected to bottom panel 14 at a fold line 16, the glue panel 12 having a locking slit flap 45 connected to the glue panel 12 at a fold line 46, wherein each of the front, top, back and bottom panels have opposite end flaps 38, 36, 34, 30 connected at fold lines 37, 35, 33, 32 to each of the front, top, back and bottom panels respectively, wherein each end flap has two spaced apart lateral edges 100, 104, 106, 110, 112, 116, 118, 130 and an axial edge 102, 108, 114, 120 ; wherein the glue panel 12 is attached to front fixed section 25 with adhesive, wherein the reclosable portion 22, 26, finger tab 50 and locking slit flap 45 are kept free of adhesive during assembly of the carton;

(b) each of the tear lines has a first end 134 and a second end 132, wherein each of said tear lines intersect the fold line 24 at a point at least 3 mm from each of the adjacent top panel end flap lateral edges 110 at the first end 134, wherein each of said tear lines intersects fold lines 35 at a distance of at least 3 mm from each of lateral edges 110, wherein each of said tear lines extends partially along each of the fold lines 35 along leg 58, wherein each of said tear lines is spaced at least 3 mm from each of the lateral edges 106, wherein each of said tear lines intersects the fold line 28 between the top and front panels at a point at least 3 mm from each of top

panel end flap lateral edges 106, wherein each of said tear lines intersects the fold line 49 and wherein each of the spaced apart second ends 132 of the tear lines is positioned at an edge 200; and

(c) said glue panel 12 defining a locking slit 44, said front reclosable section 26 having a tuck flap 42 connected to the finger tab 50 at a fold line 49 wherein the tuck flap is positioned to engage the locking slit 44 when the finger tab 50 is flexed in order to close the reclosable section of the carton after its initial opening along the tear lines.

2. The reclosable carton of claim 1 wherein the top panel end flap axial edge 108 and bottom panel axial edge 120 overlap by no more than 1 mm after assembly of the blank 10 into the carton.

3. The reclosable carton of claim 1 or claim 2 wherein top panel 17 further comprises:

(a) a pair of opposite fixed triangular segments 23 having legs 51, 51' of respective lengths d5 and d5' extending along fold line 28 and adjacent legs 52, 52' of respective lengths d3 and d3' extending along fold line 35;

(b) a pair of opposite fixed triangular segments 27 having legs 54 and 54'of respective lengths d1 and d1' extending along fold line 24 and adjacent legs 56 and 56' of respective lengths d3 and d3' extending along fold line 35;

(c) wherein fold line 28 has a length of d6, fold line 35 has a length of d4 and fold line 24 has a length of d2; and,

(c) wherein

(d1 + d1') / d2 = A where A is in the range of 0.18 to 0.30;

(d3 + d3') / d4 = B where B is in the range of 0.35 to 0.55; and

(d5 + d5') / d6 = C where C is in the range of 0.15 to 0.26.

Fig.1.

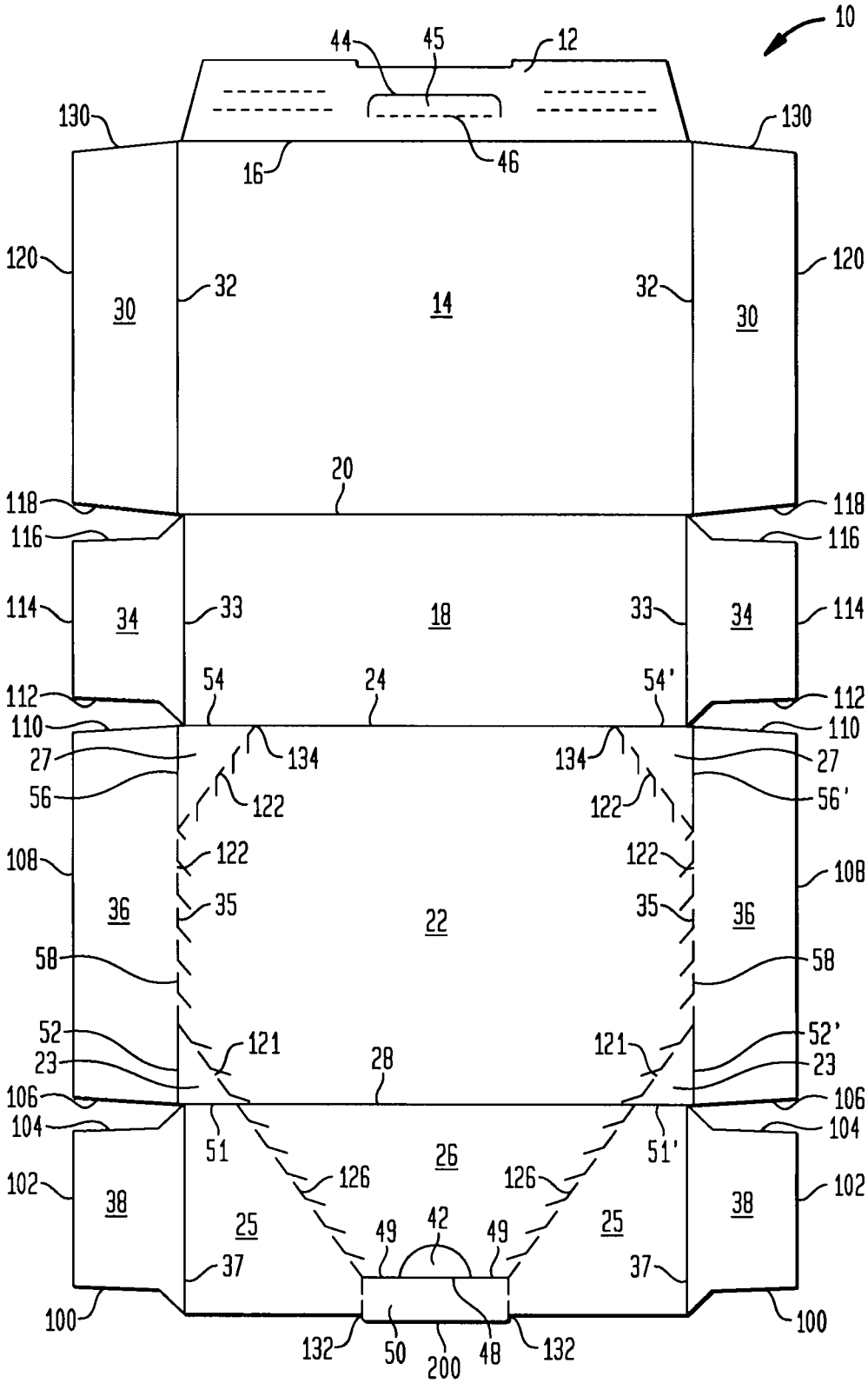
10
44
45
12
130
130
16
46
120
120
30
32
14
32
30
20
118
118
116
116
114
34
33
18
33
34
114
112
54
24
54'
112
110
110
27
134
134
27
56
122
122
56'
108
122
122
108
36
35
22
35
36
58
58
52
121
121
52'
23
28
23
106
106
104
104
51
51'
26
102
38
126
126
38
102
25
49
42
49
25
37
37
100
100
132
50
200
48
132

Fig.1A.

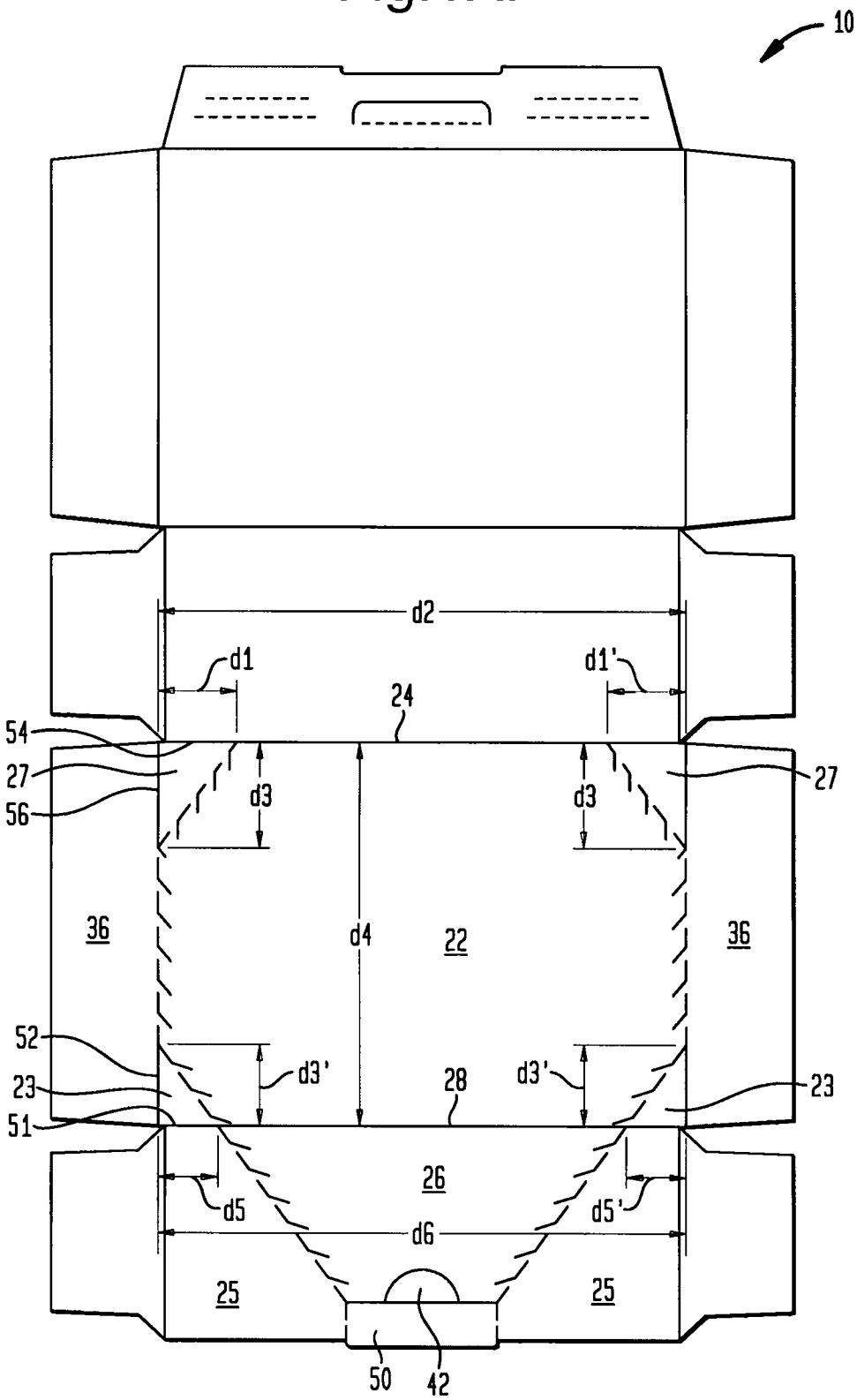
10
d2
d1
d1'
24
54
27
56
d3
d3
27
36
d4
22
36
52
23
51
d3'
28
d3'
23
26
d5
d5'
d6
25
25
50
42

Fig.2.

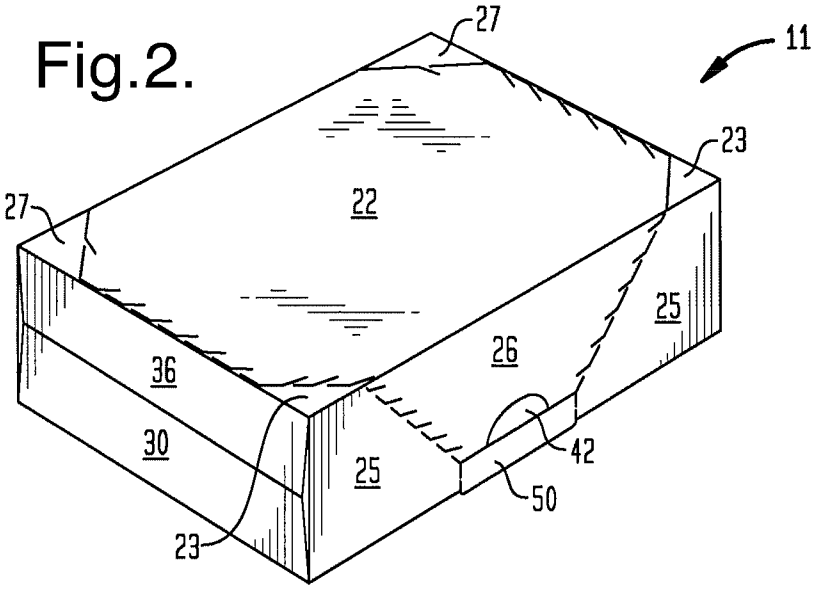

Fig.3A.

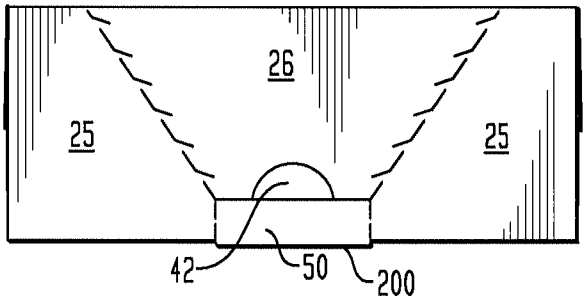

Fig.3B.

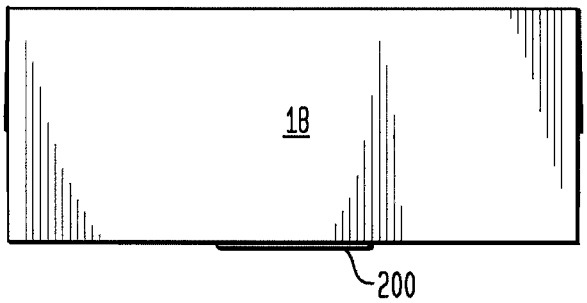

Fig.3C.

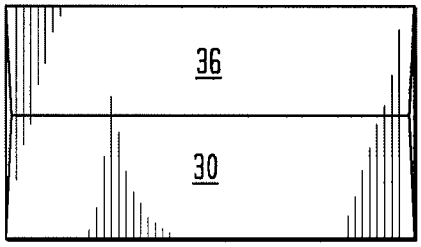

Fig.4A.

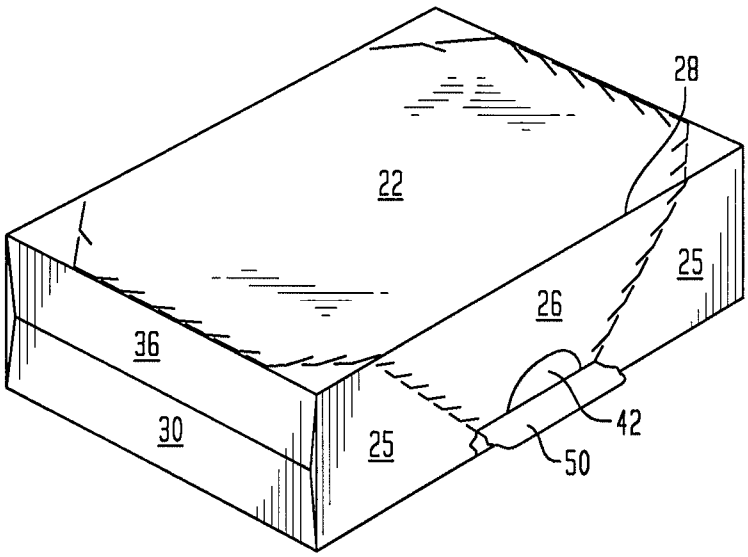

Fig.4B.

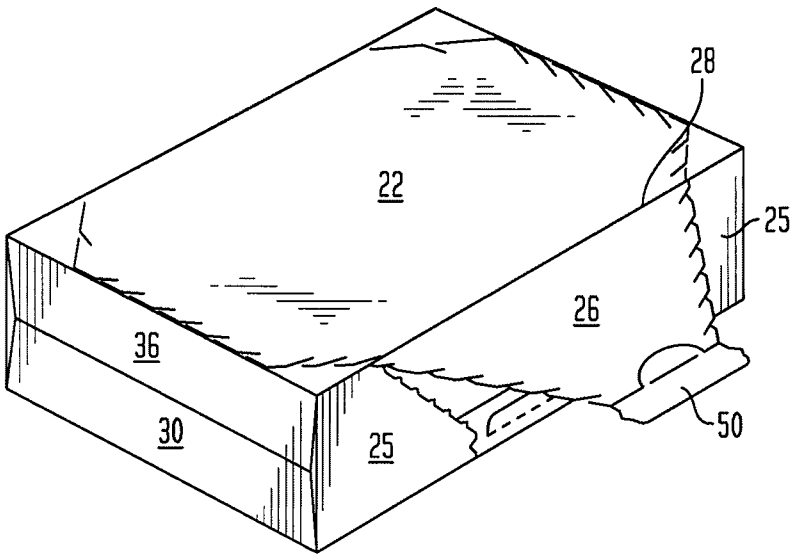

Fig.4C.

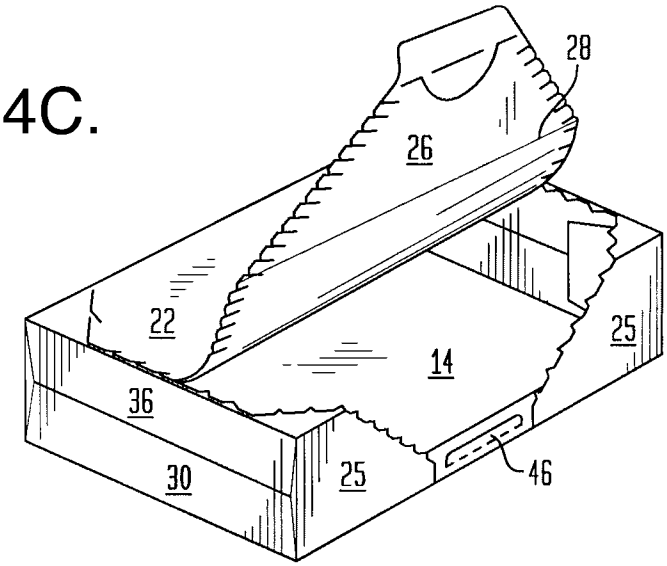
28
26
22
25
14
36
30
25
46

Fig.4D.

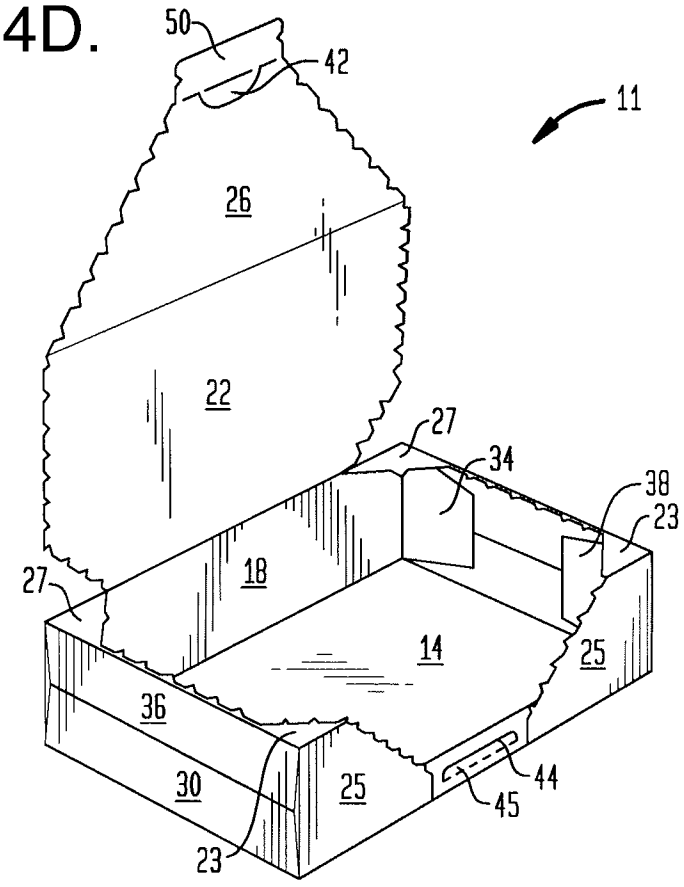
50
42
11
26
22
27
34
38
23
27
18
14
25
36
30
25
44
45
23

Fig.5A.

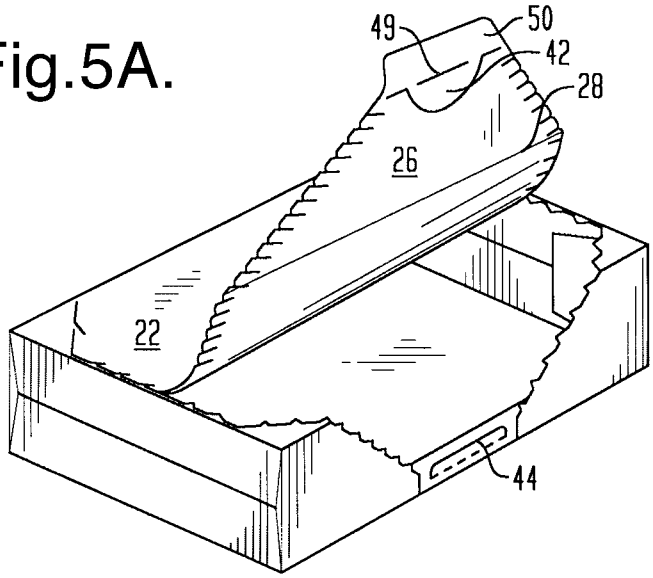

Fig.5B.

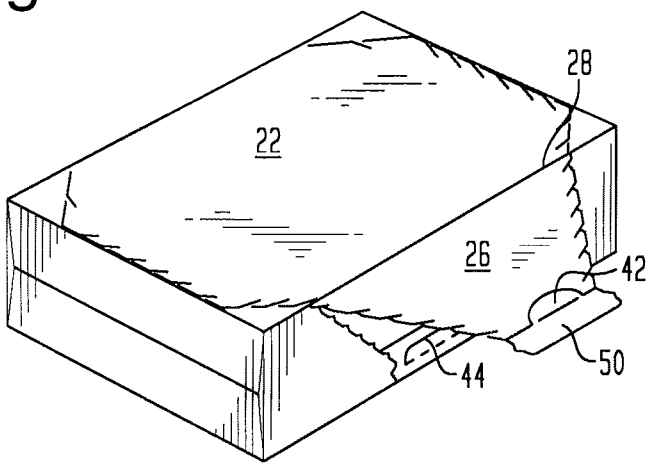

Fig.5C.

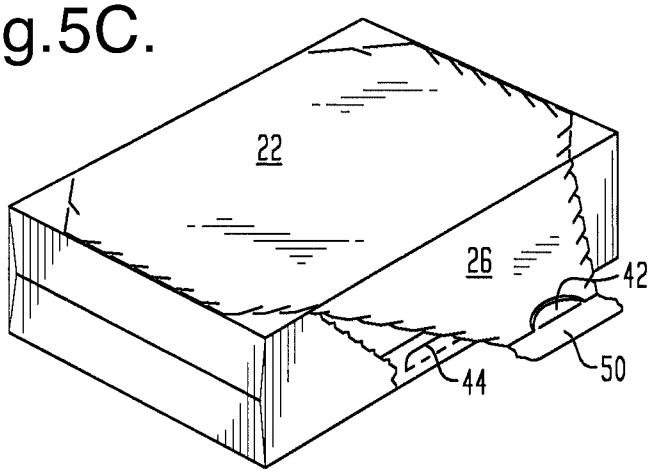

Fig.5D.

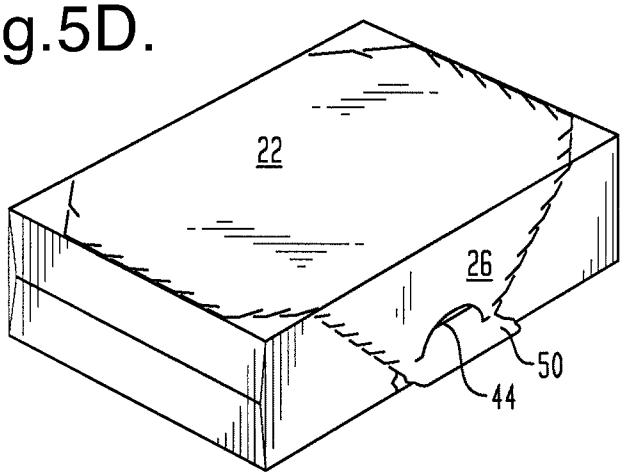

INTERNATIONAL SEARCH REPORT

International application No
PCT/EP2009/052206

A. CLASSIFICATION OF SUBJECT MATTER
INV. B65D5/68 B65D5/30 B65D5/54

According to International Patent Classification (IPC) or to both national classification and IPC

B. FIELDS SEARCHED

Minimum documentation searched (classification system followed by classification symbols)
B65D

Documentation searched other than minimum documentation to the extent that such documents are included in the fields searched

Electronic data base consulted during the international search (name of data base and, where practical, search terms used)
EPO-Internal

C. DOCUMENTS CONSIDERED TO BE RELEVANT

Category*	Citation of document, with indication, where appropriate, of the relevant passages	Relevant to claim No.
X	JP 2000 211636 A (DAINIPPON PRINTING CO LTD) 2 August 2000 (2000-08-02) abstract; figures 2,4	1-3
A	US 4 886 170 A (WILLEY MONROE J [US] ET AL) 12 December 1989 (1989-12-12) column 4, lines 1-18; figures 1,2	1-3
A	US 5 588 587 A (STIER DAVID E [US] ET AL) 31 December 1996 (1996-12-31) column 2, lines 10-64; figures 1-4	1-3

☐ Further documents are listed in the continuation of Box C.

☒ See patent family annex.

* Special categories of cited documents :

"A" document defining the general state of the art which is not considered to be of particular relevance

"E" earlier document but published on or after the international filing date

"L" document which may throw doubts on priority claim(s) or which is cited to establish the publication date of another citation or other special reason (as specified)

"O" document referring to an oral disclosure, use, exhibition or other means

"P" document published prior to the international filing date but later than the priority date claimed

"T" later document published after the international filing date or priority date and not in conflict with the application but cited to understand the principle or theory underlying the invention

"X" document of particular relevance; the claimed invention cannot be considered novel or cannot be considered to involve an inventive step when the document is taken alone

"Y" document of particular relevance; the claimed invention cannot be considered to involve an inventive step when the document is combined with one or more other such documents, such combination being obvious to a person skilled in the art.

"&" document member of the same patent family

Date of the actual completion of the international search	Date of mailing of the international search report
23 April 2009	08/05/2009

Name and mailing address of the ISA/	Authorized officer
European Patent Office, P.B. 5818 Patentlaan 2 NL - 2280 HV Rijswijk Tel. (+31-70) 340-2040, Fax: (+31-70) 340-3016	Cazacu, Corneliu

INTERNATIONAL SEARCH REPORT

Information on patent family members

International application No
PCT/EP2009/052206

Patent document cited in search report	Publication date	Patent family member(s)	Publication date
JP 2000211636 A	02-08-2000	NONE	
US 4886170 A	12-12-1989	CA 1320702 C	27-07-1993
US 5588587 A	31-12-1996	NONE	