Sept. 12, 1933. E. H. ANGIER 1,926,986

BARREL LINER

Filed March 22, 1932

Fig. 1.

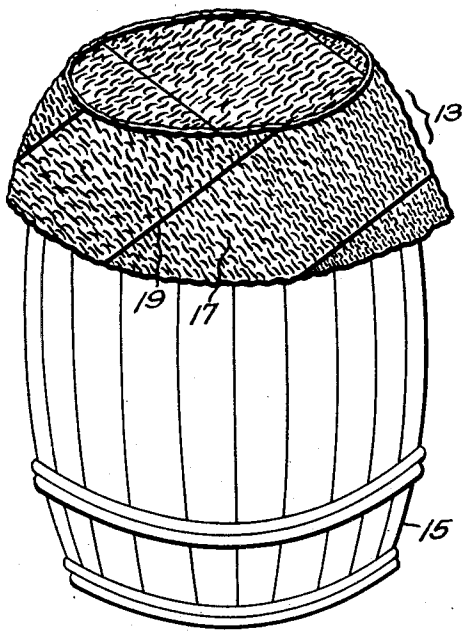


Fig. 2.

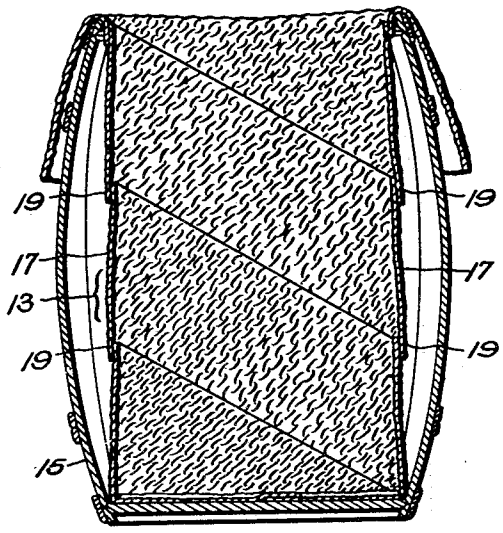


Fig. 3.

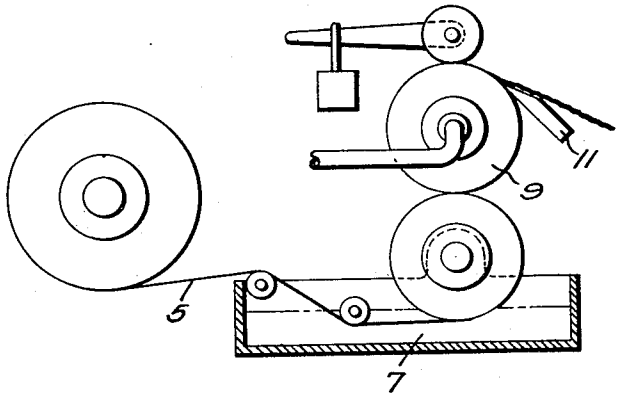


Inventor:
Edward H. Angier,
by Emery, Booth, Varney & Townsend
Attys

Patented Sept. 12, 1933 1,926,986

# UNITED STATES PATENT OFFICE

1,926,986

## BARREL LINER

Edward H. Angier, as trustee, Framingham, Mass., assignor to Edward H. Angier, Framingham, Mass.

Application March 22, 1932. Serial No. 600,481

1 Claim. (Cl. 217—3)

This invention relates to barrel liners such as are used in barrels filled with granular or pulverulent materials, and the object is to provide an improved construction for such a liner having certain advantages in use and manufacture which will appear as the description proveeds.

My invention will be well understood by reference to the following description taken in connection with the accompanying drawing, wherein:—

Fig. 1 is a perspective of a barrel having a liner inserted therein and ready to be filled;

Fig. 2 is a vertical section through the same; and

Fig. 3 is a diagram of a craping machine.

It is common to utilize in barrels which are to be filled with granular or powdery materials a liner consisting of a tube or bag of craped paper. This is inserted in the barrel, and when the barrel is filled it expands on account of the expansibility of the crapings to fit the bilge of the barrel. The liner prevents the enclosed material from sifting through the staves. To permit the tube to expand radially to fit the bilge the crapings extend lengthwise of the barrel.

The methods of craping paper which are now commercially exploited are similar to that illustrated diagrammatically in Fig. 3 wherein I have shown a web of paper 5 leading from a supply roll through a tank 7 wherein it is suitably moistened to prepare it for the crinkling operation. The moistened web is then deposited on and pressed into close adherence to a craping roll 9 from which it is stripped and crowded back on itself by means of the doctor blade 11. As is well known, paper has a decided grain which is longitudinal of the web. The crapings by the doctor blade are transverse to the width of the web, substantially perpendicular to the grain. Thus when a liner is made of this paper, the grain of the paper is circumferential in the liner.

Referring now to Fig. 1, in using such a liner as illustrated at 13 in the barrel 15, it is dropped into the barrel and to facilitate the filling of the barrel the top part which projects above the barrel is folded over downwardly to the outside, as shown in Fig. 1. In practice this is done by the workman running his hand quickly around the chine of the barrel, folding the paper over. This quick turning puts considerable strain upon the paper, and if the grain of the paper runs at right angles to the crinkling, as in the ordinary liner, it is presented to the chine of the barrel and the paper is likely to split or tear at the chine.

In accordance with my invention I obviate the disadvantage referred to while obtaining certain advantages in manufacture by forming the liner 13 by helically coiling a strip 17 of craped paper of suitable width having a longitudinal grain, transverse crapings into the form of a tube, the edges of the spires being suitably seamed together at 19 as by means of a suitable adhesive, thus providing a unitary tube of a diameter substantially corresponding to the end diameter of the barrel (see Fig. 2). The direction of the crapings and of the grain of the paper are substantially perpendicular to each other but in the completed liner or tube are both diagonal to the length thereof. There is thus provided a sufficient radial expansibility due to the crapings to permit the tube to expand under internal pressure when the barrel is filled to fit the bilge while the grain of the paper or the fibers thereof extend transversely across the chine, strengthening the liner at this point so that tearing or splitting is avoided.

The spirally wound tube may be made continuously in indefinite length and cut off in short lengths as desired to form the linings. The method of manufacture is thus rapid and cheap while the product is superior.

It will be understood that the illustration of the crapings in the drawing is diagrammatic rather than realistic.

Having thus described by way of example an embodiment of my invention, what I claim and desire to secure by Letters Patent is:—

A barrel liner comprising a helically wound strip of paper having expansible craping transverse to the grain thereof, the spires of the winding being seamed together to provide a unitary tube of a diameter substantially corresponding to the end diameter of the barrel, capable of radial expansion under internal pressure to fit the bilge of the barrel and presenting the grain to the chine transversely thereof whereby splitting of the paper along the chine is avoided.

EDWARD H. ANGIER.

CERTIFICATE OF CORRECTION.

Patent No. 1,926,986. September 12, 1933.

EDWARD H. ANGIER.

It is hereby certified that error appears in the printed specification of the above numbered patent requiring correction as follows: In the heading to the printed specification, line 3, strike out the words and comma "as trustee," and line 5, after "Mass." insert , as trustee.; and in line 2, of the claim, for "craping" read crapings; and that the said Letters Patent should be read with these corrections therein that the same may conform to the record of the case in the Patent Office.

Signed and sealed this 14th day of November, A. D. 1933.

F. M. Hopkins

(Seal) Acting Commissioner of Patents.