US 20020107979A1

(19) **United States**

(12) **Patent Application Publication** (10) **Pub. No.: US 2002/0107979 A1**

Sarnikowski et al. (43) **Pub. Date: Aug. 8, 2002**

(54) **COMPUTER DATA TRANSMISSION OVER A TELECOMMUNICTIONS NETWORK**

(75) Inventors: **Scott Sarnikowski**, Plymouth, MN (US); **John M. Logajan**, Arden Hills, MN (US)

Correspondence Address:
FOGG SLIFER & POLGLAZE, P.A.
P.O. BOX 581009
MINNEAPOLIS, MN 55458-1009 (US)

(73) Assignee: **ADC Telecommunications, Inc.**, Eden Prairie, MN (US)

(21) Appl. No.: **10/043,753**

(22) Filed: **Jan. 11, 2002**

Related U.S. Application Data

(60) Division of application No. 09/395,913, filed on Sep. 15, 1999, which is a division of application No. 08/673,002, filed on Jun. 28, 1996, now patented, which is a continuation-in-part of application No. 08/650,408, filed on May 20, 1996, now abandoned.

Publication Classification

(51) **Int. Cl.**[7] **H04B 1/38**; H04L 5/16; G06F 15/173; G06F 9/00; G06F 9/46; H04L 12/28; H04L 12/56

(52) **U.S. Cl.** **709/238**; 375/222; 370/911; 709/328

(57) **ABSTRACT**

A method of computer data transmission over a telecommunications network having a head end connected to a plurality of service units is provided. The method includes receiving a request for transmitting computer data over the network from a service unit, retrieving provisioning information for the service unit, and selectively assigning one or more data channels based on the provisioning information to transmit the computer data over the network to provide a data path with substantially constant data transfer bandwidth between a head end and the service unit.

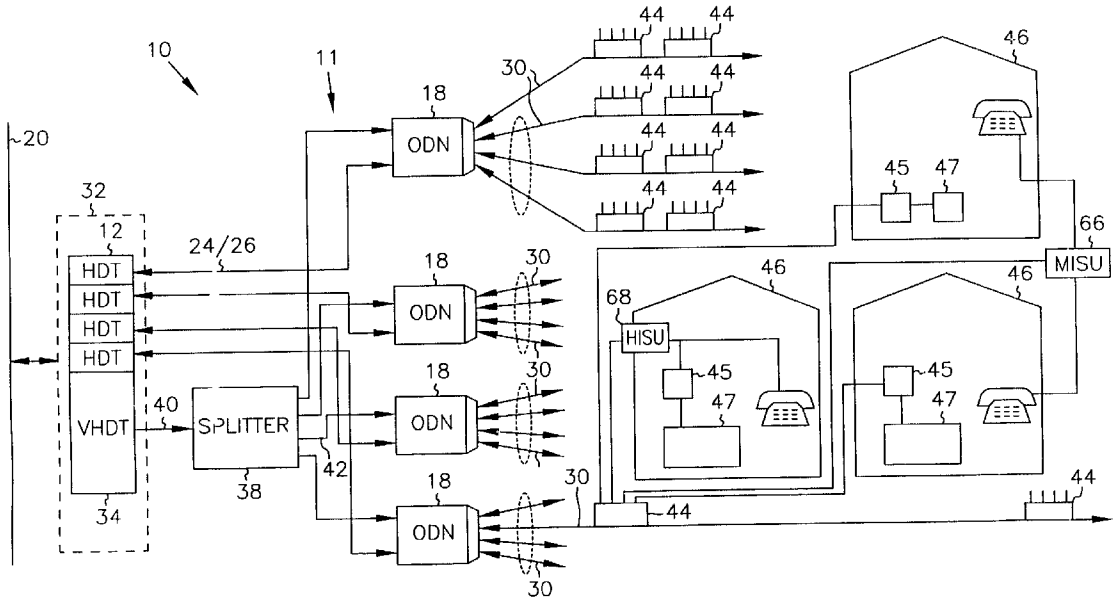

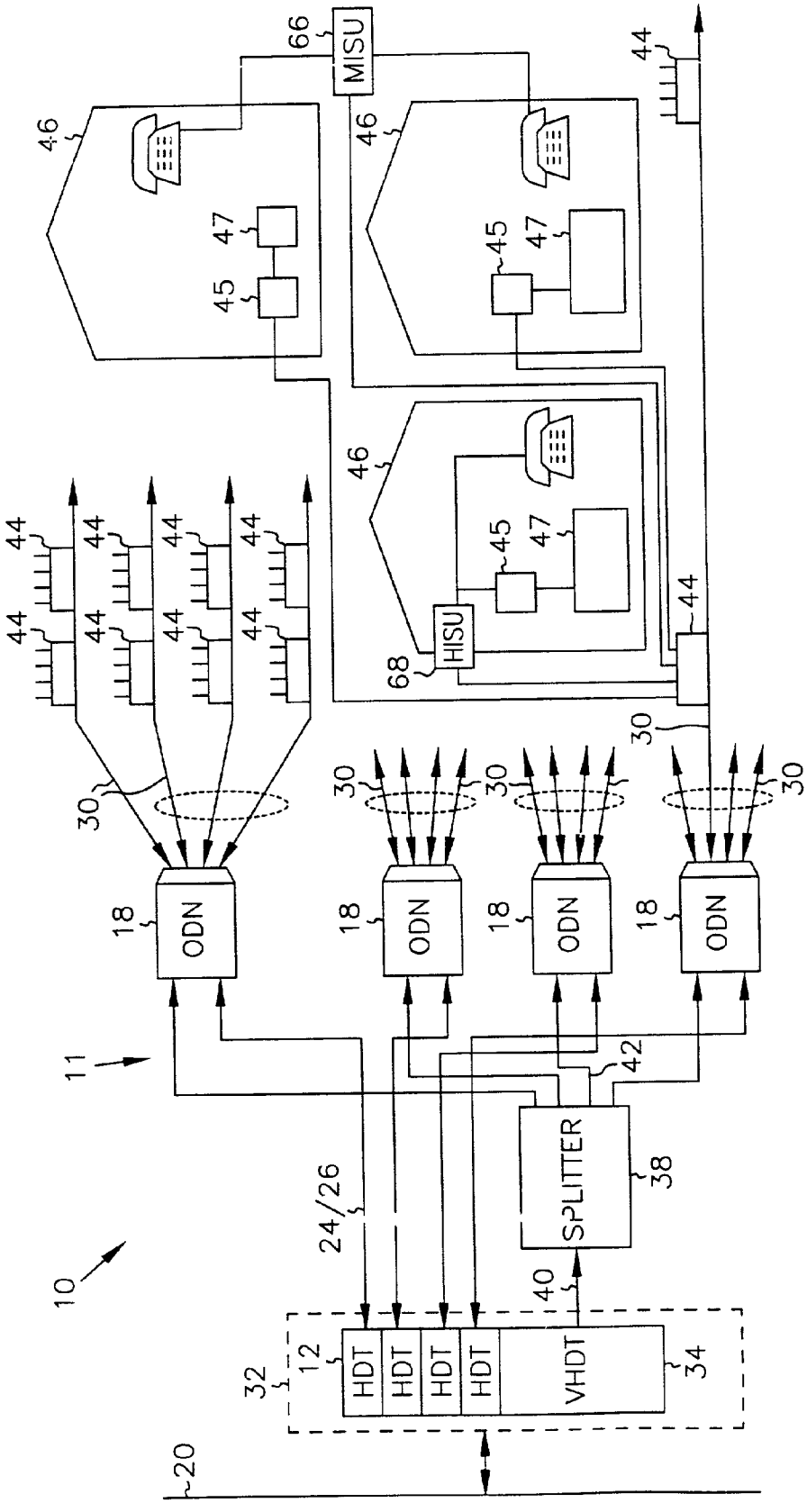
66
MISU
46
47
45
44
HISU
68
30
18
ODN
11
42
SPLITTER
38
24/26
40
10
32
12
HDT
VHDT
34
20

FIG. 1

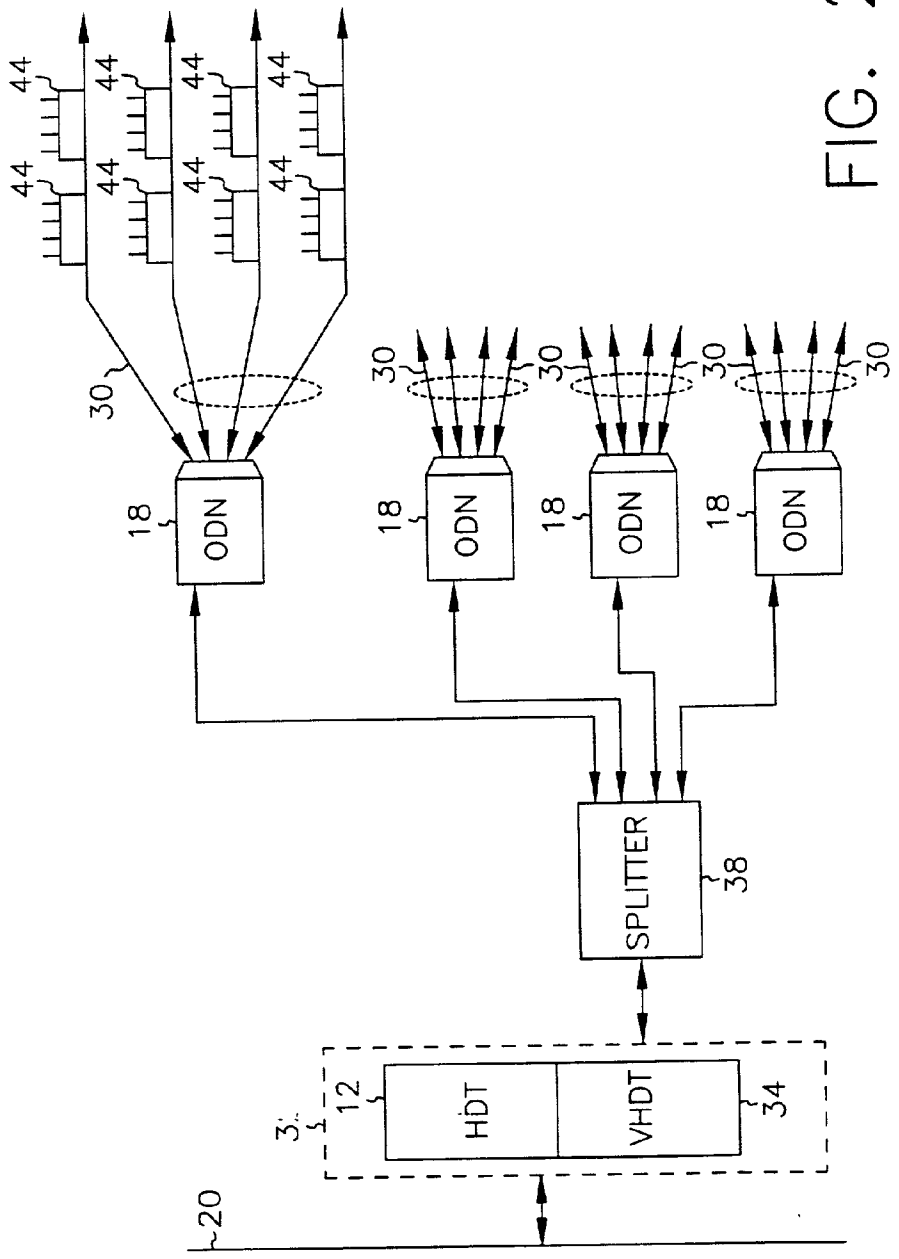

FIG. 2

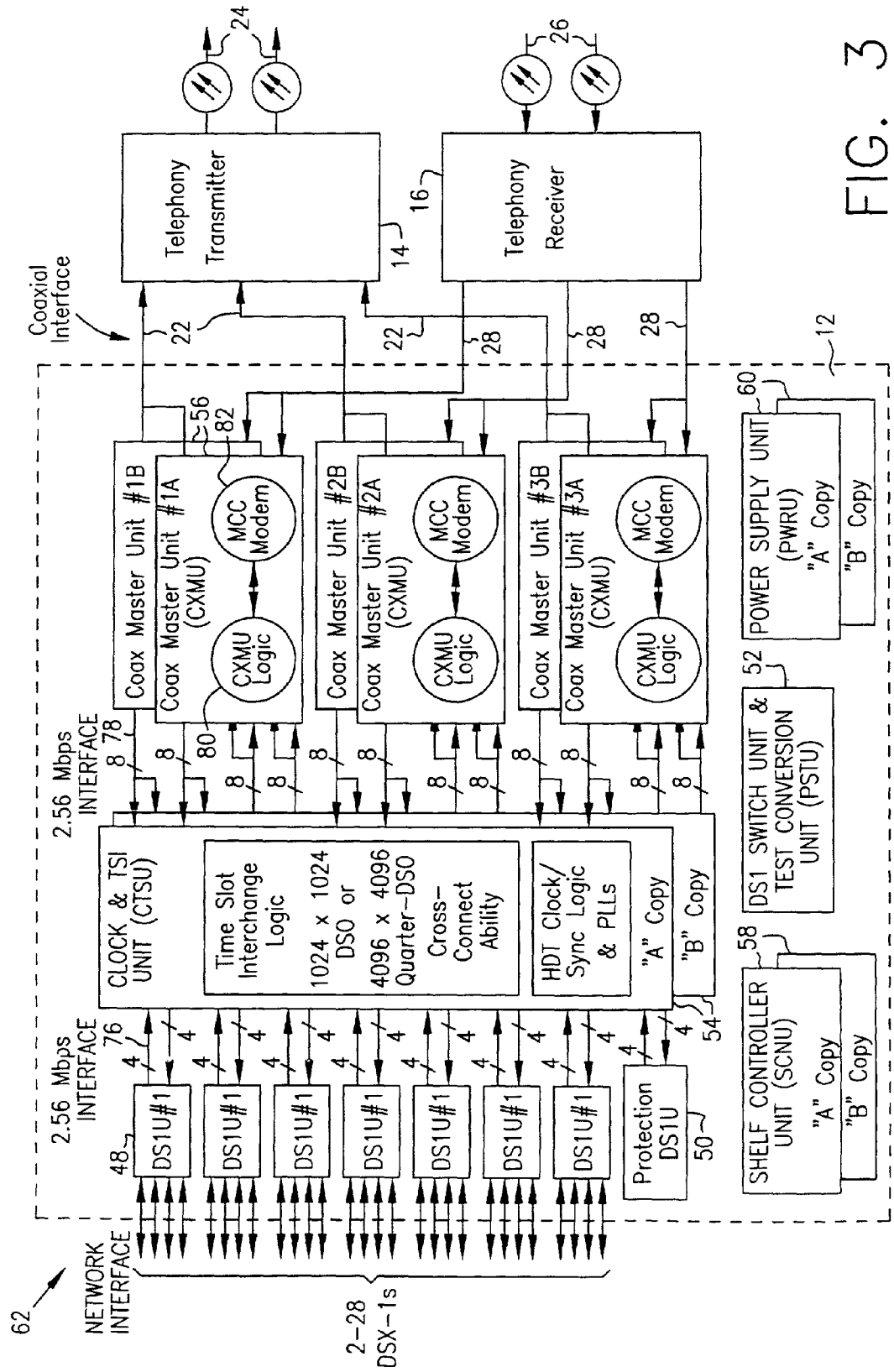
62
NETWORK INTERFACE
2-28 DSX-1s
2.56 Mbps INTERFACE
48
DS1U#1
76
Protection DS1U
50
CLOCK & TSI UNIT (CTSU)
Time Slot Interchange Logic
1024 x 1024 DS0 or 4096 x 4096 Quarter-DS0 Cross-Connect Ability
HDT Clock/ Sync Logic & PLLs
"A" Copy
"B" Copy
54
2.56 Mbps INTERFACE
78
Coax Master Unit #1B
Coax Master Unit #1A (CXMU)
CXMU Logic
MCC Modem
56
82
80
Coax Master Unit #2B
Coax Master Unit #2A (CXMU)
Coax Master Unit #3B
Coax Master Unit #3A (CXMU)
Coaxial Interface
22
Telephony Transmitter
14
24
16
Telephony Receiver
26
28
12
SHELF CONTROLLER UNIT (SCNU)
58
DS1 SWITCH UNIT & TEST CONVERSION UNIT (PSTU)
52
POWER SUPPLY UNIT (PWRU)
60

FIG. 3

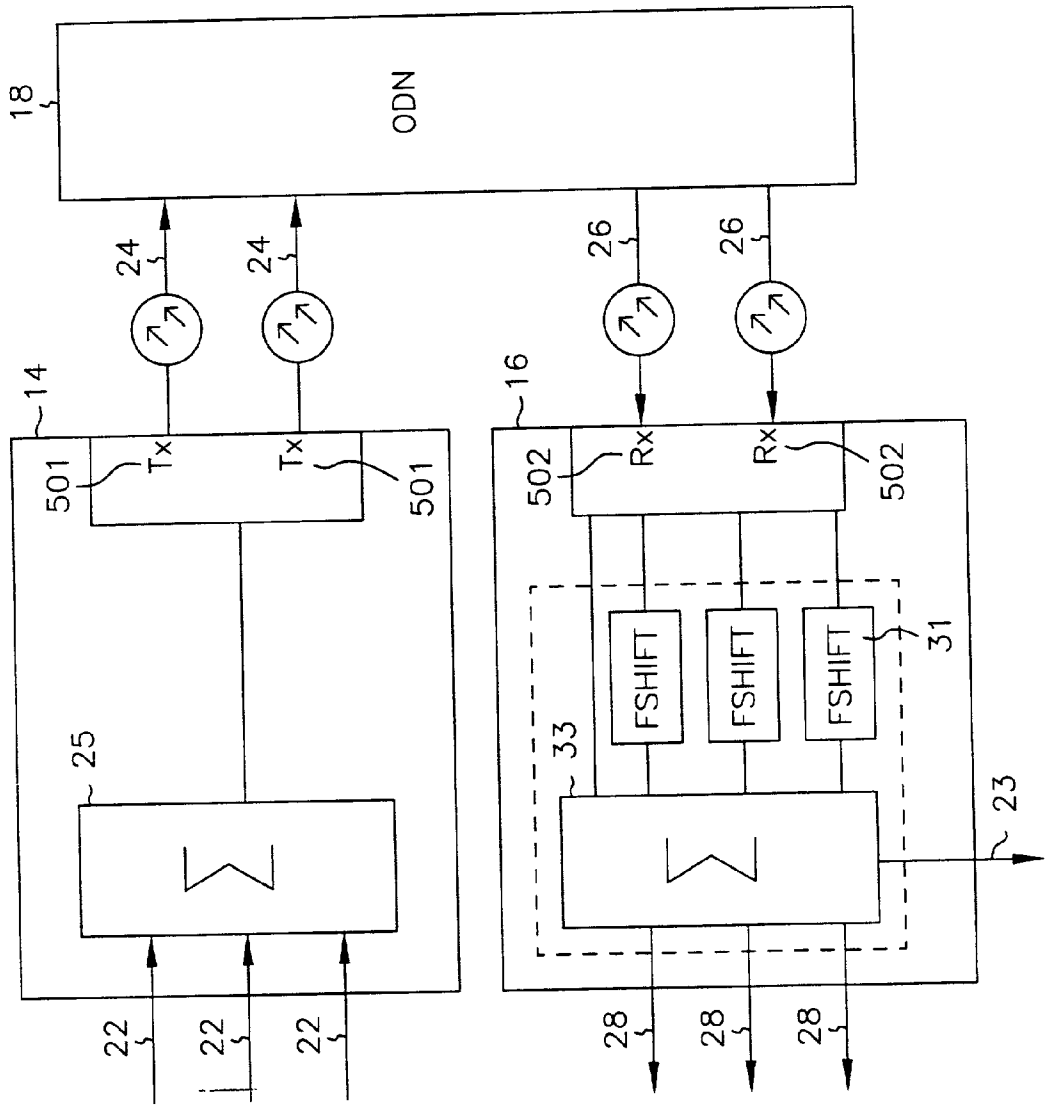
18
ODN
24
24
26
26
14
16
501
Tx
Tx
501
502
Rx
Rx
502
FSHIFT
FSHIFT
FSHIFT
31
33
25
23
22
22
22
28
28
28

FIG. 4

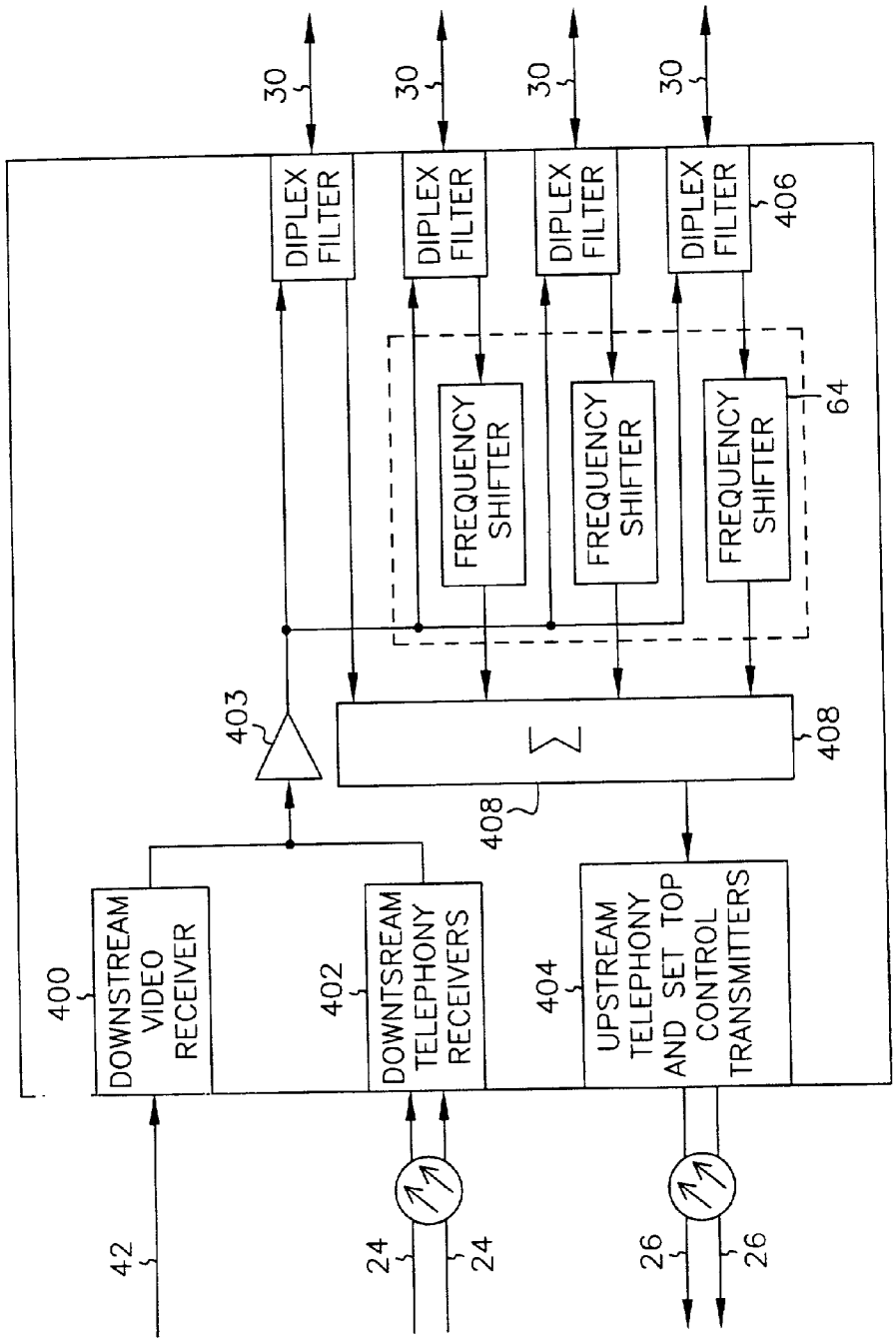
30
30
30
30
DIPLEX FILTER
DIPLEX FILTER
DIPLEX FILTER
DIPLEX FILTER
406
FREQUENCY SHIFTER
FREQUENCY SHIFTER
FREQUENCY SHIFTER
64
403
408
408
400
DOWNSTREAM VIDEO RECEIVER
402
DOWNTSREAM TELEPHONY RECEIVERS
404
UPSTREAM TELEPHONY AND SET TOP CONTROL TRANSMITTERS
42
24
24
26
26

FIG. 5

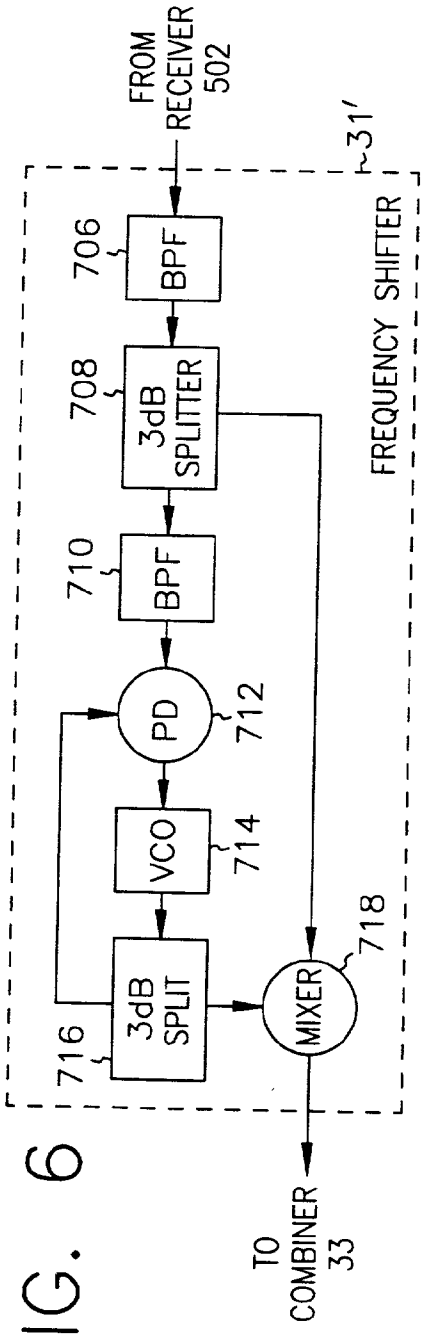
FROM RECEIVER 502
~31'
FREQUENCY SHIFTER
706
BPF
708
3dB SPLITTER
710
BPF
PD
712
VCO
714
716
3dB SPLIT
MIXER
718
TO COMBINER 33

FIG. 6

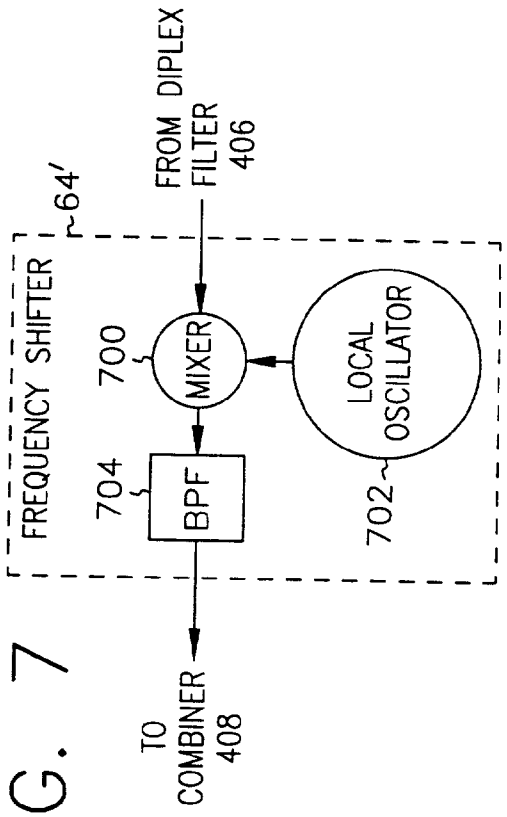
FROM DIPLEX FILTER 406
~64'
FREQUENCY SHIFTER
700
MIXER
LOCAL OSCILLATOR
704
BPF
702
TO COMBINER 408

FIG. 7

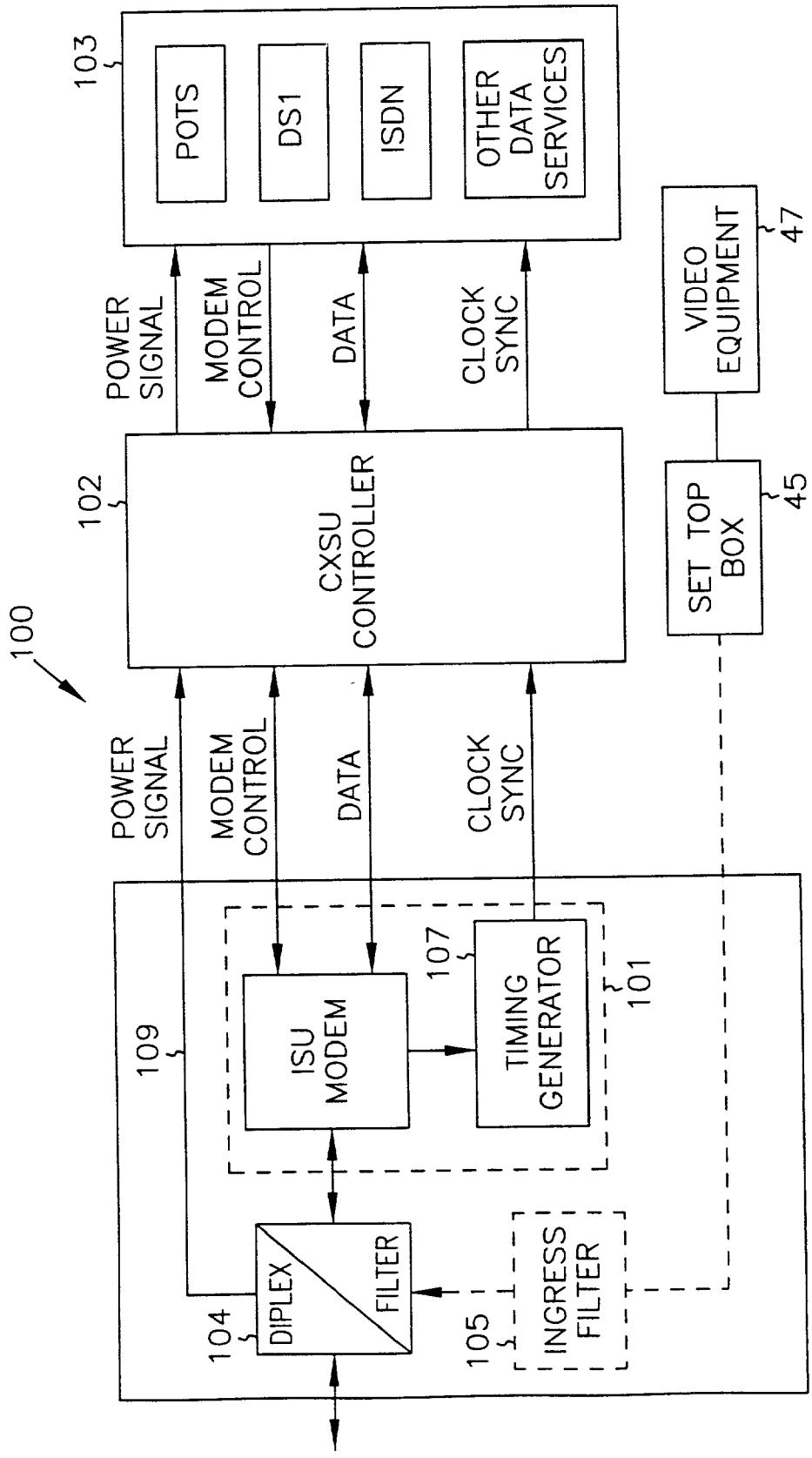
100
103
POTS
DS1
ISDN
OTHER DATA SERVICES
POWER SIGNAL
MODEM CONTROL
DATA
CLOCK SYNC
VIDEO EQUIPMENT
47
102
CXSU CONTROLLER
SET TOP BOX
45
POWER SIGNAL
MODEM CONTROL
DATA
CLOCK SYNC
109
ISU MODEM
107
TIMING GENERATOR
101
104
DIPLEX FILTER
105
INGRESS FILTER

FIG. 8

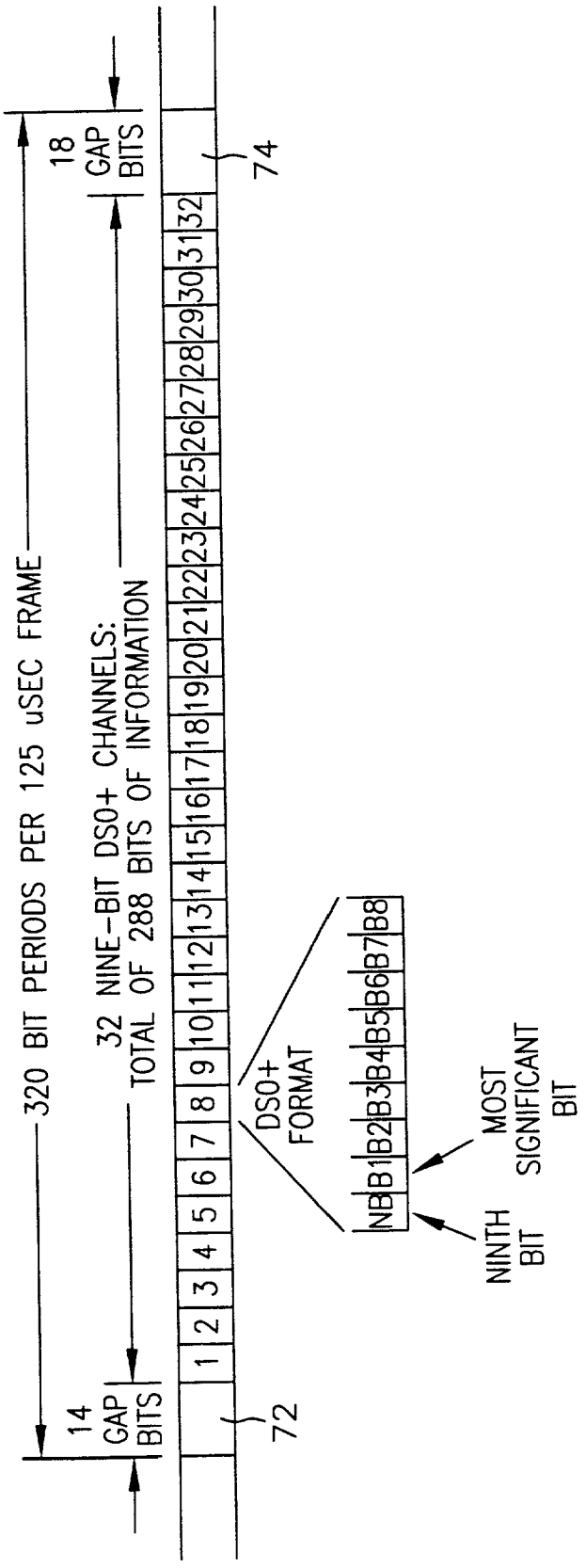
320 BIT PERIODS PER 125 uSEC FRAME
14 GAP BITS
32 NINE-BIT DS0+ CHANNELS:
TOTAL OF 288 BITS OF INFORMATION
18 GAP BITS
72
74
1 2 3 4 5 6 7 8 9 10 11 12 13 14 15 16 17 18 19 20 21 22 23 24 25 26 27 28 29 30 31 32
DS0+ FORMAT
NB B1 B2 B3 B4 B5 B6 B7 B8
NINTH BIT
MOST SIGNIFICANT BIT

FIG. 9

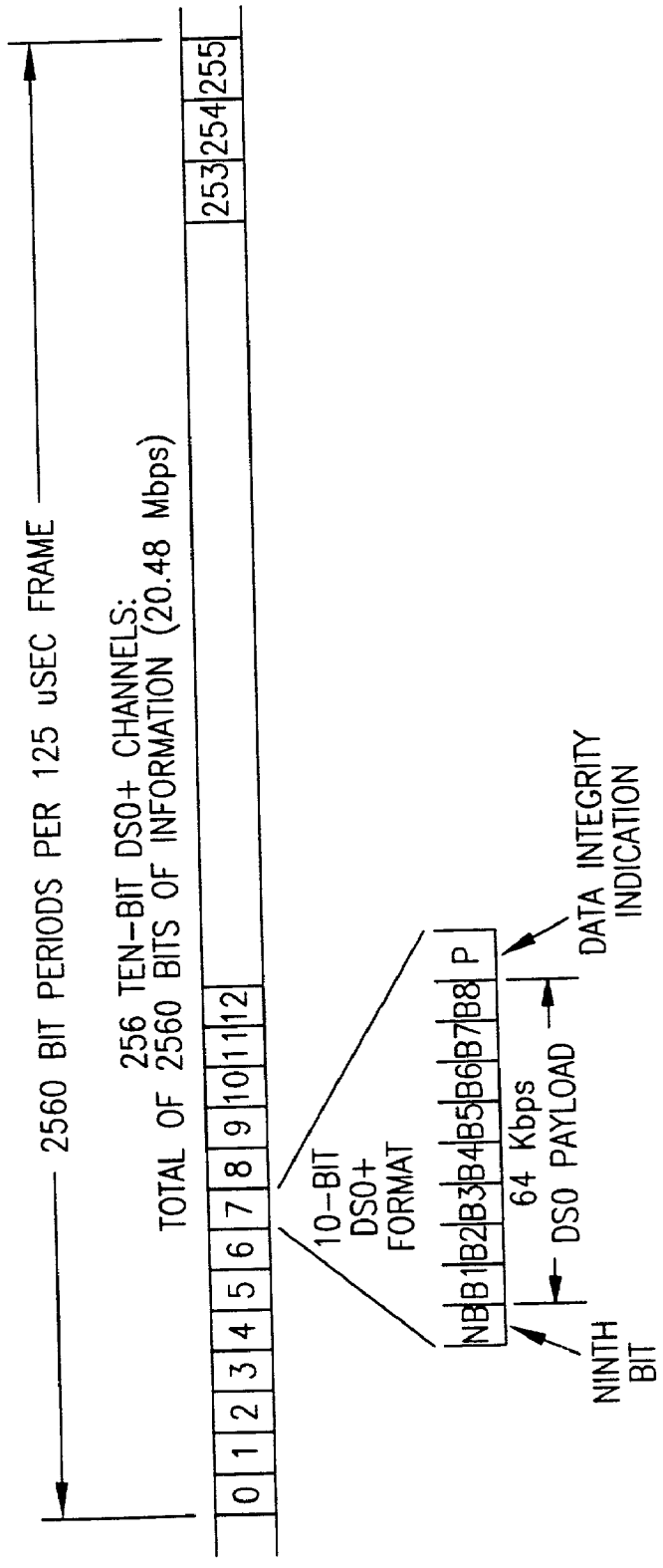
2560 BIT PERIODS PER 125 uSEC FRAME
256 TEN-BIT DS0+ CHANNELS:
TOTAL OF 2560 BITS OF INFORMATION (20.48 Mbps)
0 1 2 3 4 5 6 7 8 9 10 11 12
253 254 255
10-BIT
DS0+
FORMAT
NB B1 B2 B3 B4 B5 B6 B7 B8 P
64 Kbps
DS0 PAYLOAD
NINTH
BIT
DATA INTEGRITY
INDICATION

FIG. 10

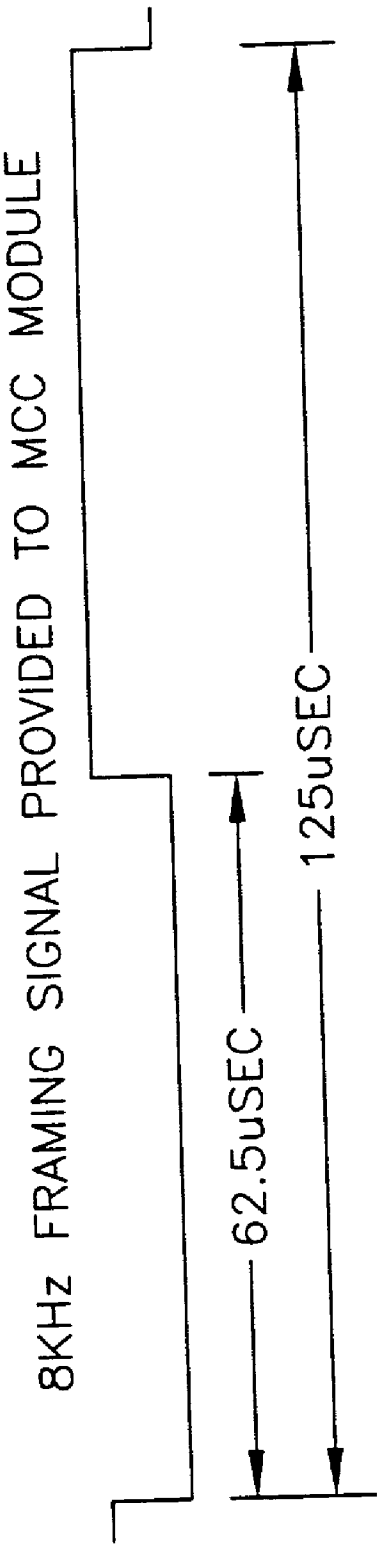
8KHz FRAMING SIGNAL PROVIDED TO MCC MODULE
62.5uSEC
125uSEC

FIG. 11

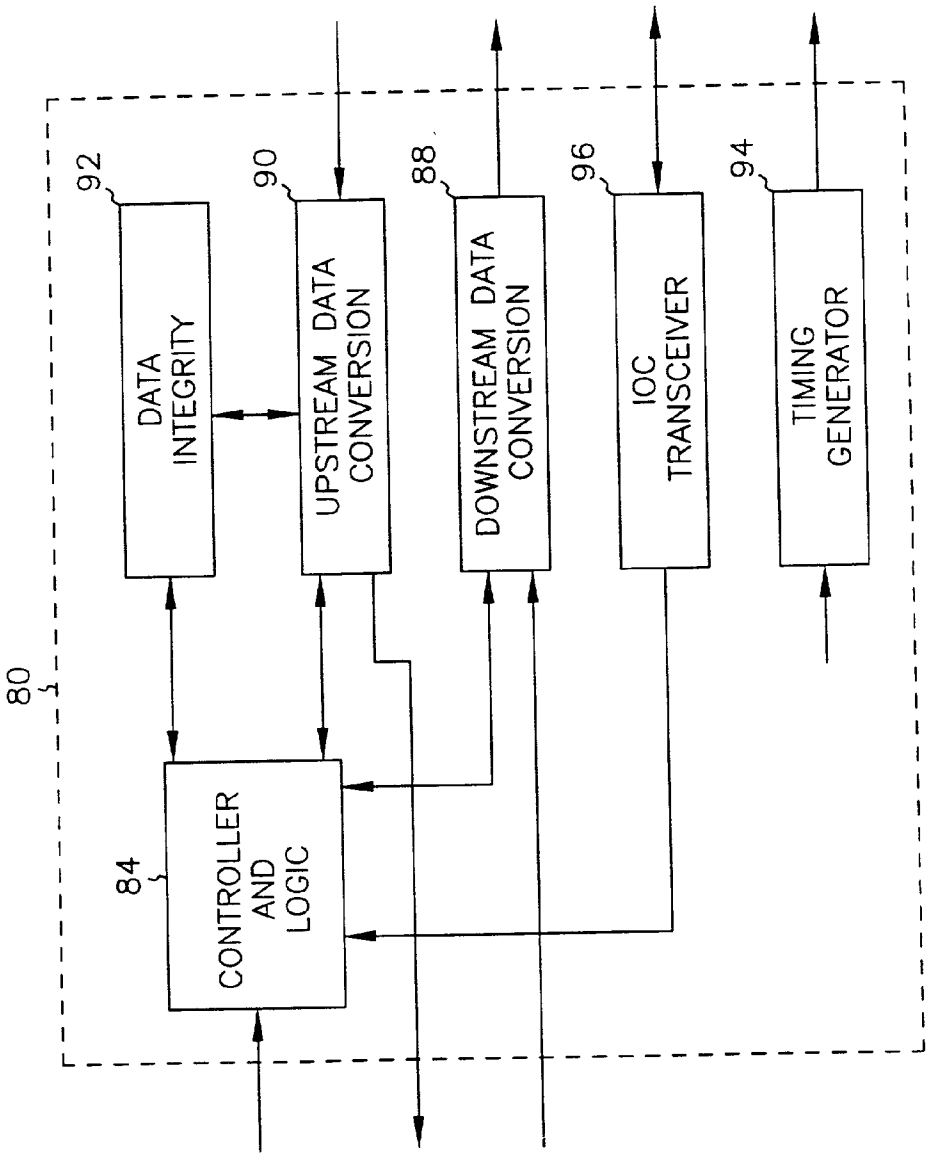
80
92
DATA INTEGRITY
90
UPSTREAM DATA CONVERSION
88
DOWNSTREAM DATA CONVERSION
96
IOC TRANSCEIVER
94
TIMING GENERATOR
84
CONTROLLER AND LOGIC

FIG. 12

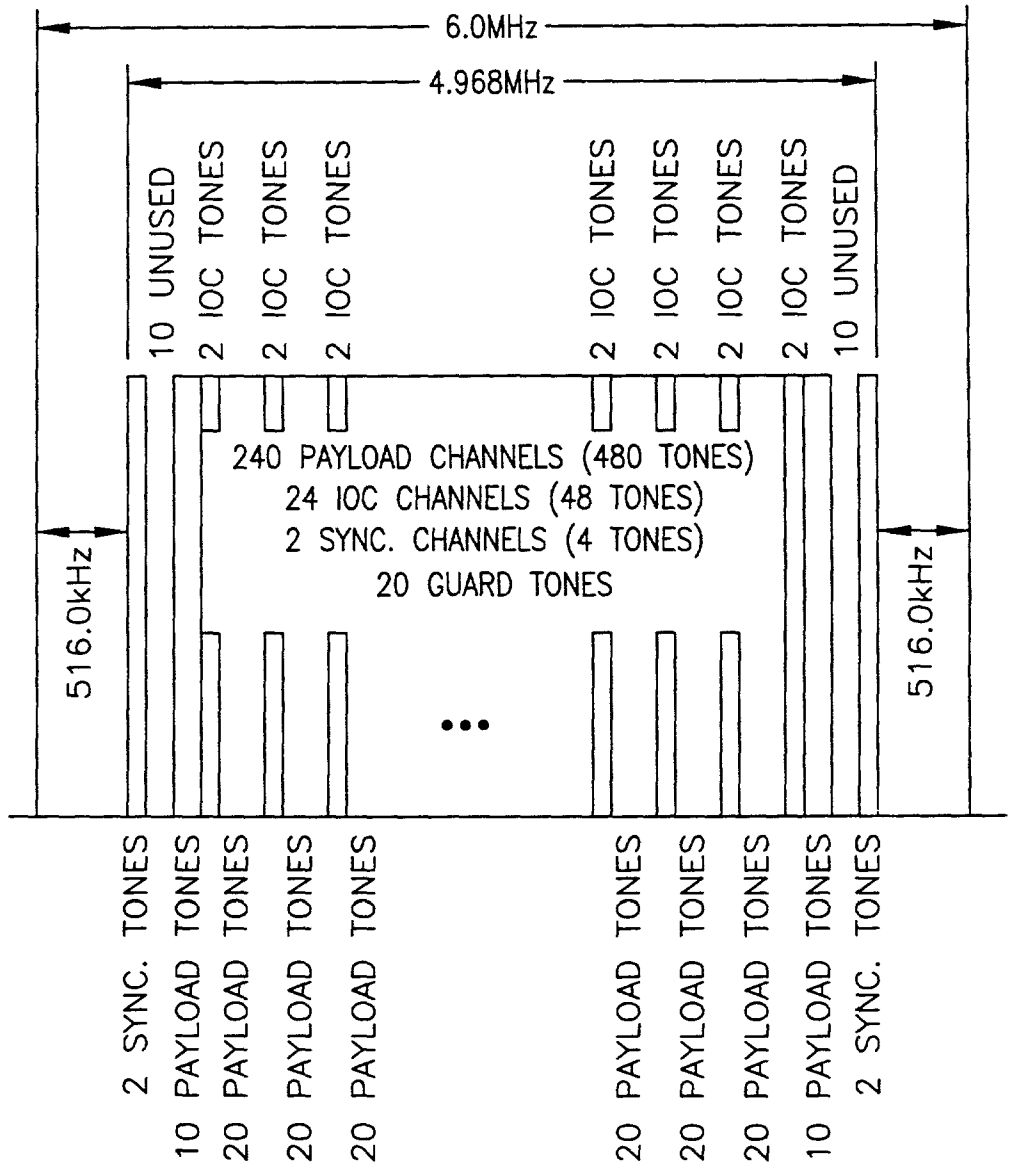
6.0MHz
4.968MHz
10 UNUSED
2 IOC TONES
2 IOC TONES
2 IOC TONES
2 IOC TONES
2 IOC TONES
2 IOC TONES
2 IOC TONES
2 IOC TONES
10 UNUSED
240 PAYLOAD CHANNELS (480 TONES)
24 IOC CHANNELS (48 TONES)
2 SYNC. CHANNELS (4 TONES)
20 GUARD TONES
516.0kHz
516.0kHz
2 SYNC. TONES
10 PAYLOAD TONES
20 PAYLOAD TONES
20 PAYLOAD TONES
20 PAYLOAD TONES
20 PAYLOAD TONES
20 PAYLOAD TONES
20 PAYLOAD TONES
10 PAYLOAD TONES
2 SYNC. TONES

FIG. 13

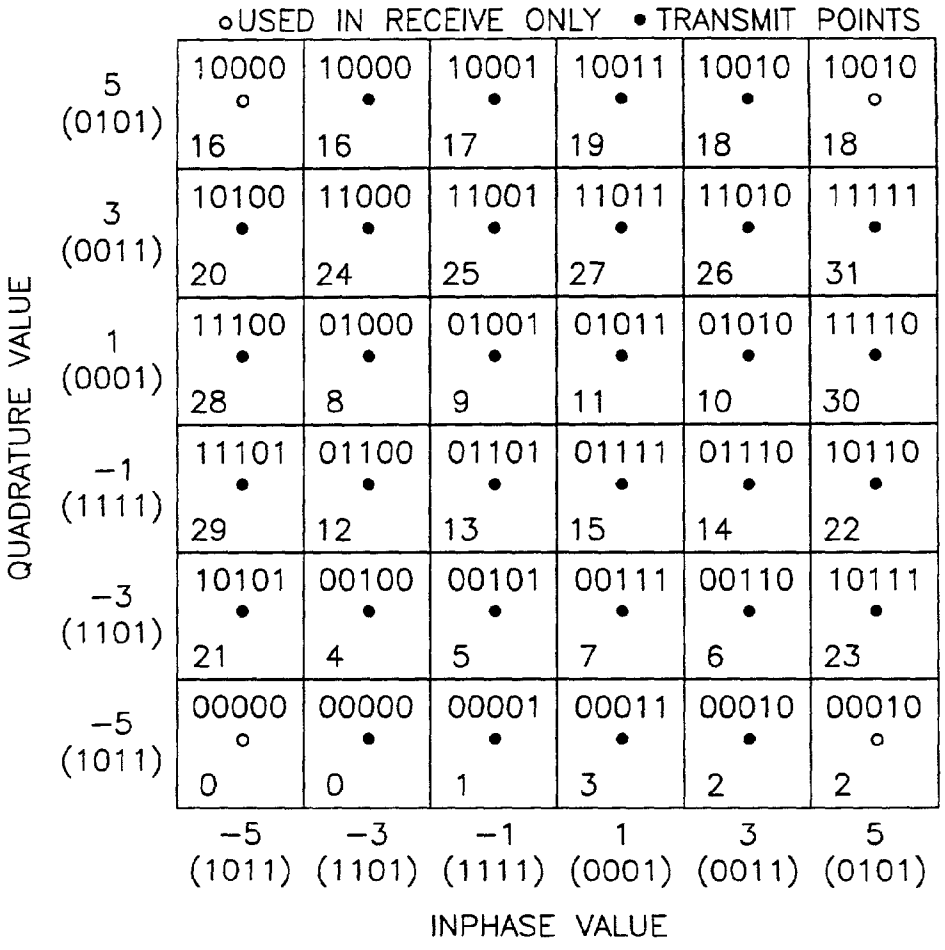
o USED IN RECEIVE ONLY • TRANSMIT POINTS
QUADRATURE VALUE
5 (0101)
3 (0011)
1 (0001)
−1 (1111)
−3 (1101)
−5 (1011)
10000 o 16
10000 • 16
10001 • 17
10011 • 19
10010 • 18
10010 o 18
10100 • 20
11000 • 24
11001 • 25
11011 • 27
11010 • 26
11111 • 31
11100 • 28
01000 • 8
01001 • 9
01011 • 11
01010 • 10
11110 • 30
11101 • 29
01100 • 12
01101 • 13
01111 • 15
01110 • 14
10110 • 22
10101 • 21
00100 • 4
00101 • 5
00111 • 7
00110 • 6
10111 • 23
00000 o 0
00000 • 0
00001 • 1
00011 • 3
00010 • 2
00010 o 2
−5 (1011)
−3 (1101)
−1 (1111)
1 (0001)
3 (0011)
5 (0101)
INPHASE VALUE

FIG. 14

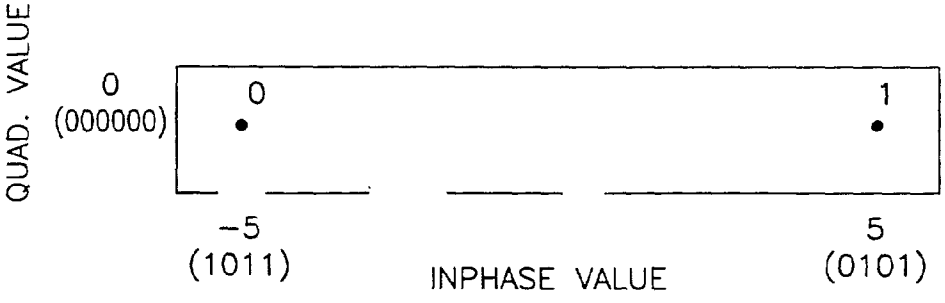
QUAD. VALUE
0 (000000)
0
1
−5 (1011)
5 (0101)
INPHASE VALUE

FIG. 15

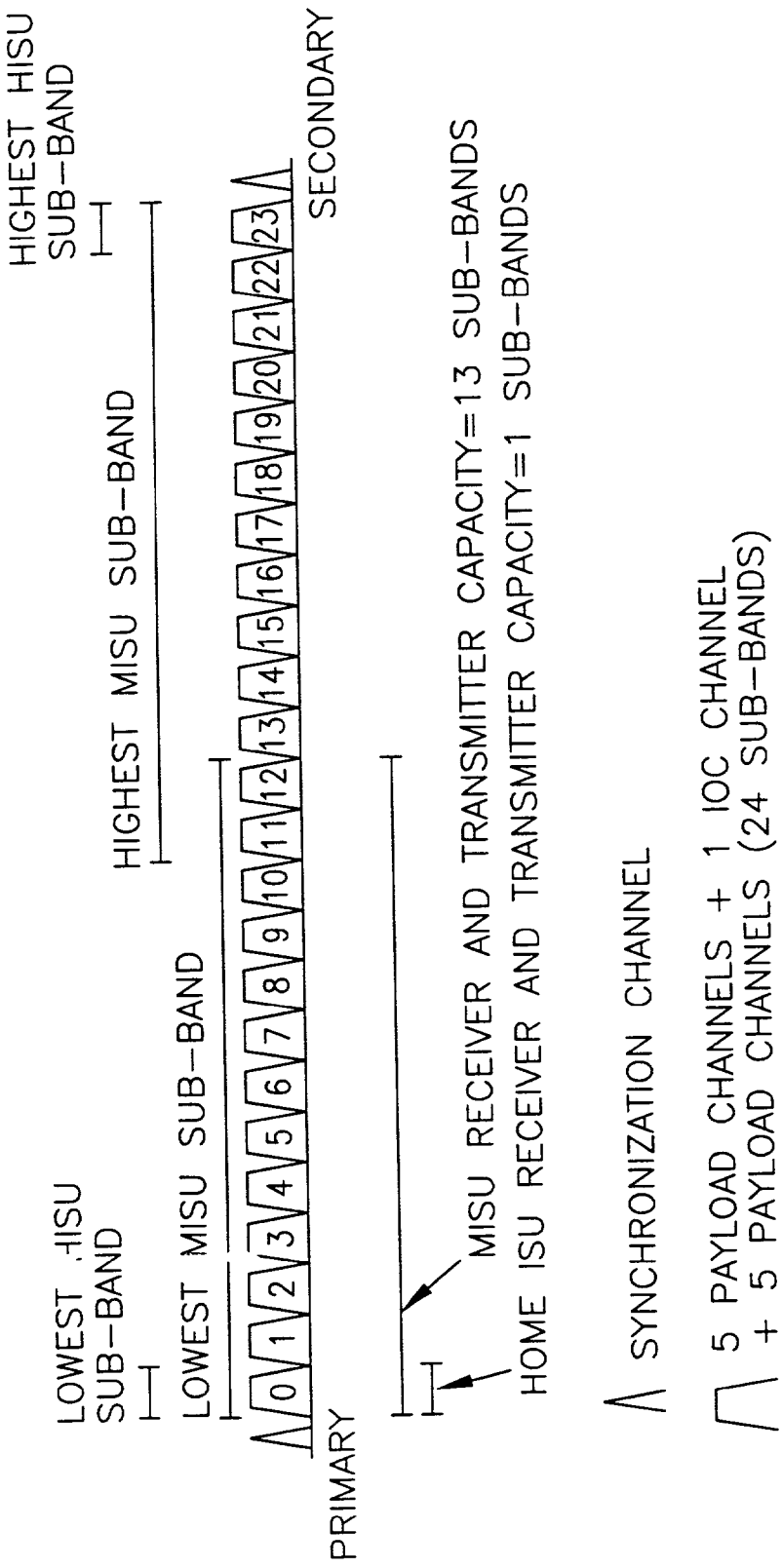
HIGHEST HISU SUB-BAND
HIGHEST MISU SUB-BAND
LOWEST HISU SUB-BAND
LOWEST MISU SUB-BAND
PRIMARY
SECONDARY
0 1 2 3 4 5 6 7 8 9 10 11 12 13 14 15 16 17 18 19 20 21 22 23
MISU RECEIVER AND TRANSMITTER CAPACITY=13 SUB-BANDS
HOME ISU RECEIVER AND TRANSMITTER CAPACITY=1 SUB-BANDS
SYNCHRONIZATION CHANNEL
5 PAYLOAD CHANNELS + 1 IOC CHANNEL
+ 5 PAYLOAD CHANNELS (24 SUB-BANDS)

FIG. 16

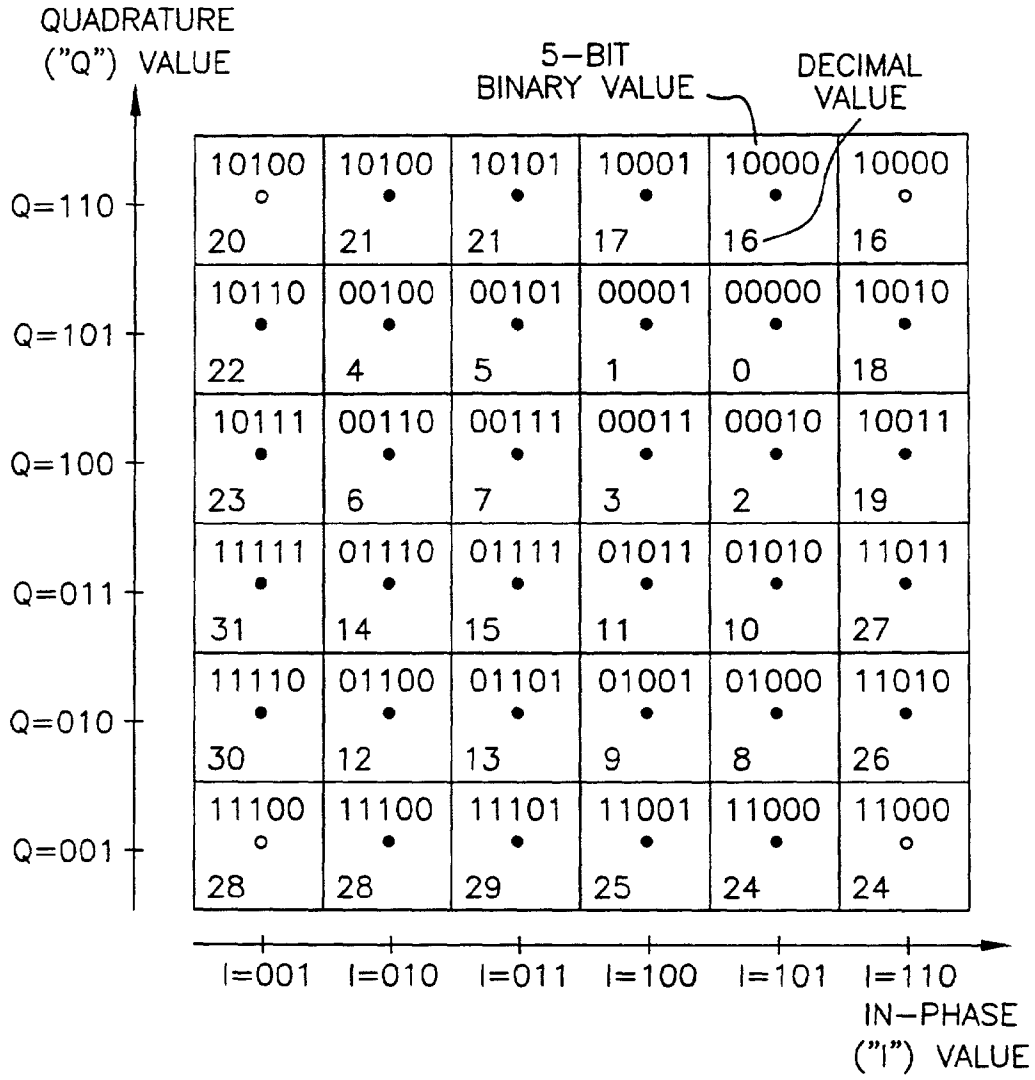
QUADRATURE
("Q") VALUE
5-BIT
BINARY VALUE
DECIMAL
VALUE
Q=110
Q=101
Q=100
Q=011
Q=010
Q=001
10100 20
10100 21
10101 21
10001 17
10000 16
10000 16
10110 22
00100 4
00101 5
00001 1
00000 0
10010 18
10111 23
00110 6
00111 7
00011 3
00010 2
10011 19
11111 31
01110 14
01111 15
01011 11
01010 10
11011 27
11110 30
01100 12
01101 13
01001 9
01000 8
11010 26
11100 28
11100 28
11101 29
11001 25
11000 24
11000 24
I=001
I=010
I=011
I=100
I=101
I=110
IN-PHASE
("I") VALUE

FIG. 17

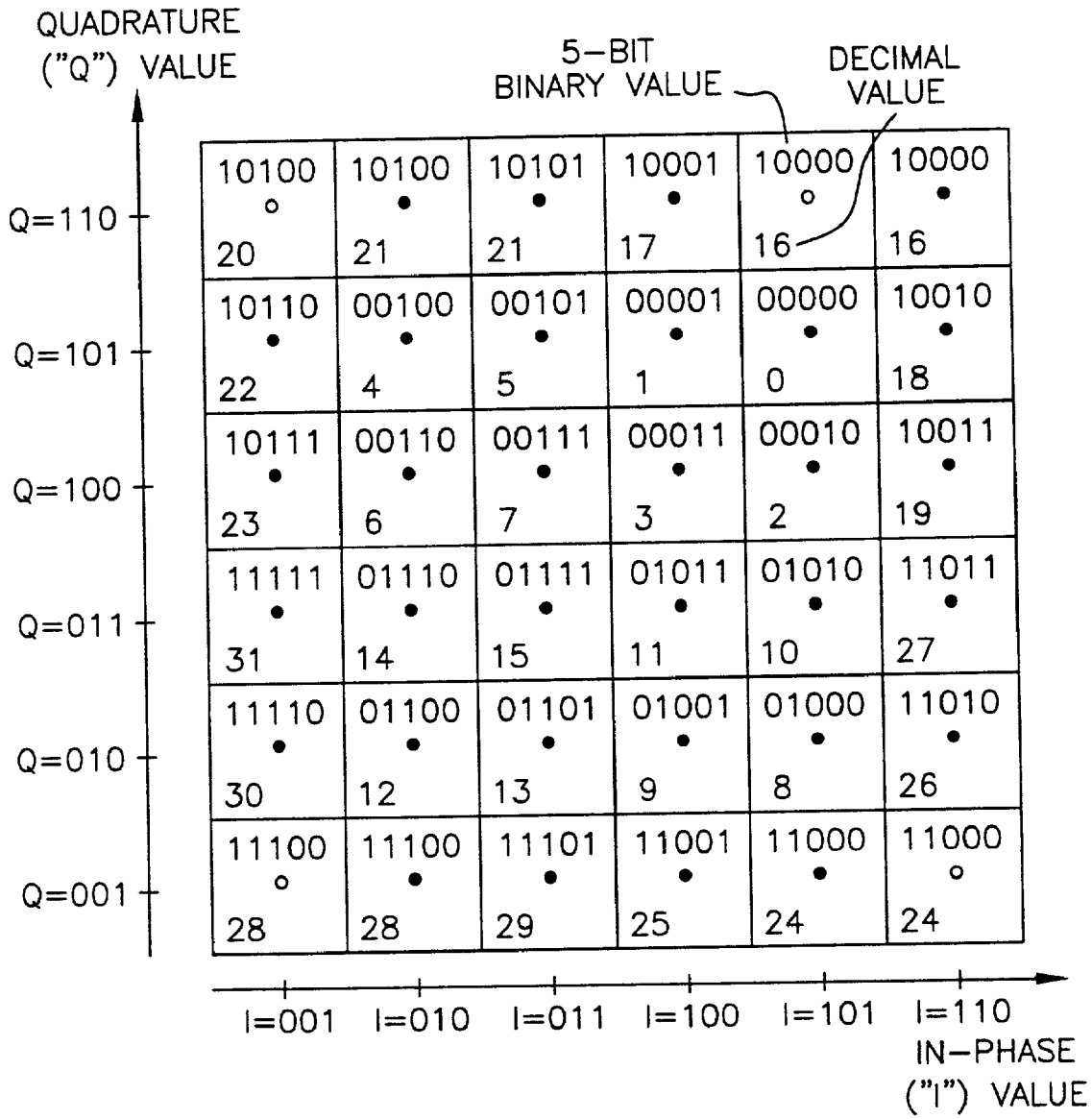
QUADRATURE ("Q") VALUE
5-BIT BINARY VALUE
DECIMAL VALUE
Q=110
Q=101
Q=100
Q=011
Q=010
Q=001
10100 20
10100 21
10101 21
10001 17
10000 16
10000 16
10110 22
00100 4
00101 5
00001 1
00000 0
10010 18
10111 23
00110 6
00111 7
00011 3
00010 2
10011 19
11111 31
01110 14
01111 15
01011 11
01010 10
11011 27
11110 30
01100 12
01101 13
01001 9
01000 8
11010 26
11100 28
11100 28
11101 29
11001 25
11000 24
11000 24
I=001
I=010
I=011
I=100
I=101
I=110
IN-PHASE ("I") VALUE

FIG. 18

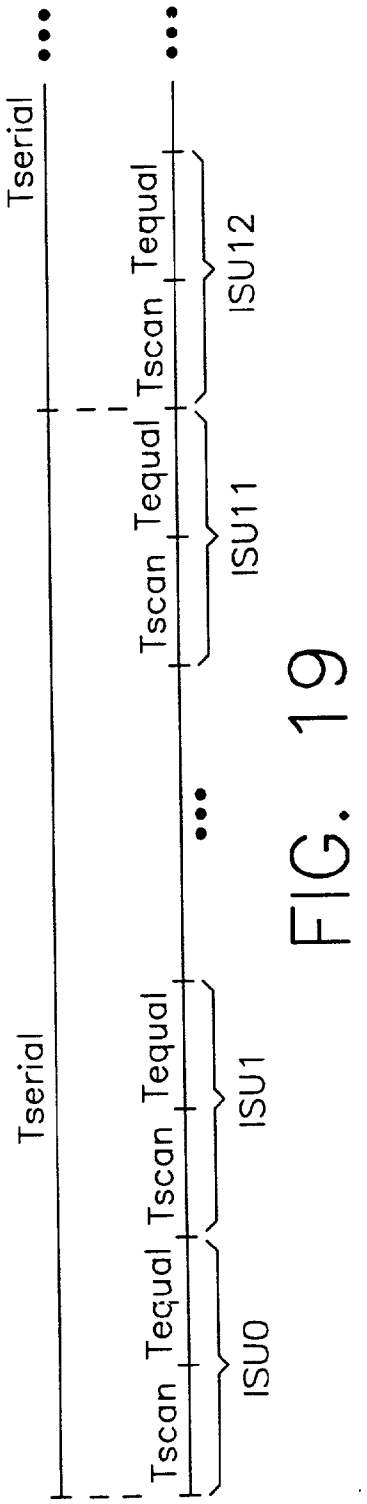
Tserial
Tscan
Tequal
ISU0
ISU1
ISU11
ISU12

FIG. 19

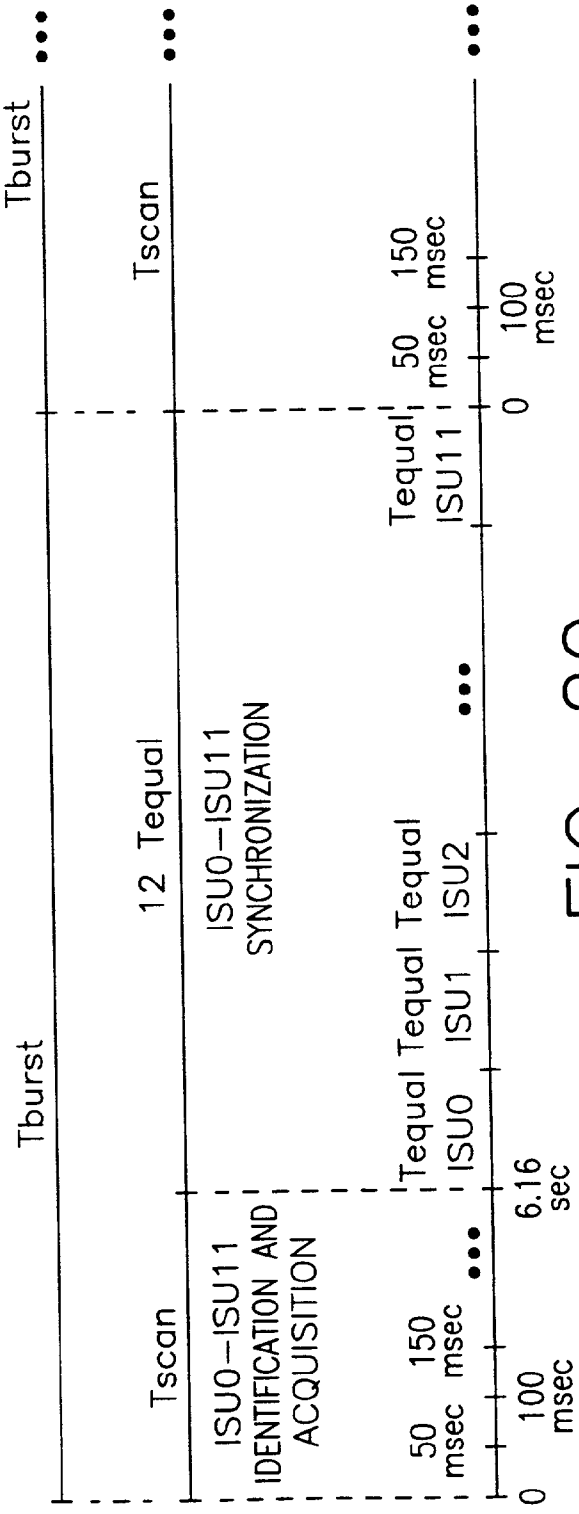
Tburst
Tscan
12 Tequal
ISU0–ISU11
SYNCHRONIZATION
ISU0–ISU11
IDENTIFICATION AND
ACQUISITION
Tequal
ISU0
ISU1
ISU2
ISU11
50 msec
150 msec
100 msec
6.16 sec
0

FIG. 20

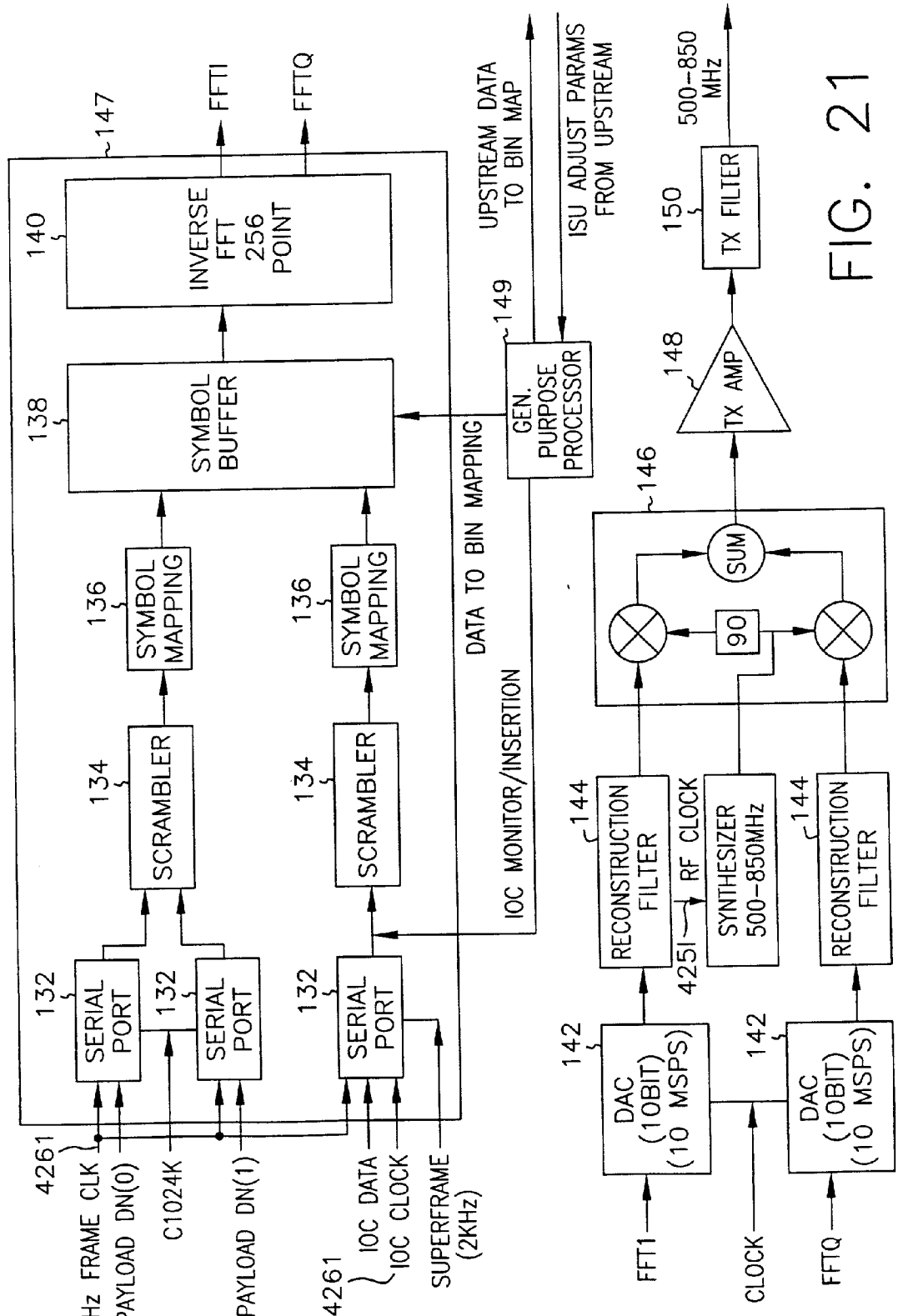
4261
8KHz FRAME CLK
PAYLOAD DN(0)
C1024K
PAYLOAD DN(1)
4261
IOC DATA
IOC CLOCK
SUPERFRAME (2KHz)
132
SERIAL PORT
132
SERIAL PORT
132
SERIAL PORT
134
SCRAMBLER
134
SCRAMBLER
136
SYMBOL MAPPING
136
SYMBOL MAPPING
138
SYMBOL BUFFER
140
INVERSE FFT 256 POINT
147
FFTI
FFTQ
DATA TO BIN MAPPING
IOC MONITOR/INSERTION
149
GEN. PURPOSE PROCESSOR
UPSTREAM DATA TO BIN MAP
ISU ADJUST PARAMS FROM UPSTREAM
142
DAC (10BIT) (10 MSPS)
142
DAC (10BIT) (10 MSPS)
144
RECONSTRUCTION FILTER
144
RECONSTRUCTION FILTER
4251
RF CLOCK
SYNTHESIZER 500-850MHz
146
90
SUM
148
TX AMP
150
TX FILTER
500-850 MHz
FFTI
CLOCK
FFTQ

FIG. 21

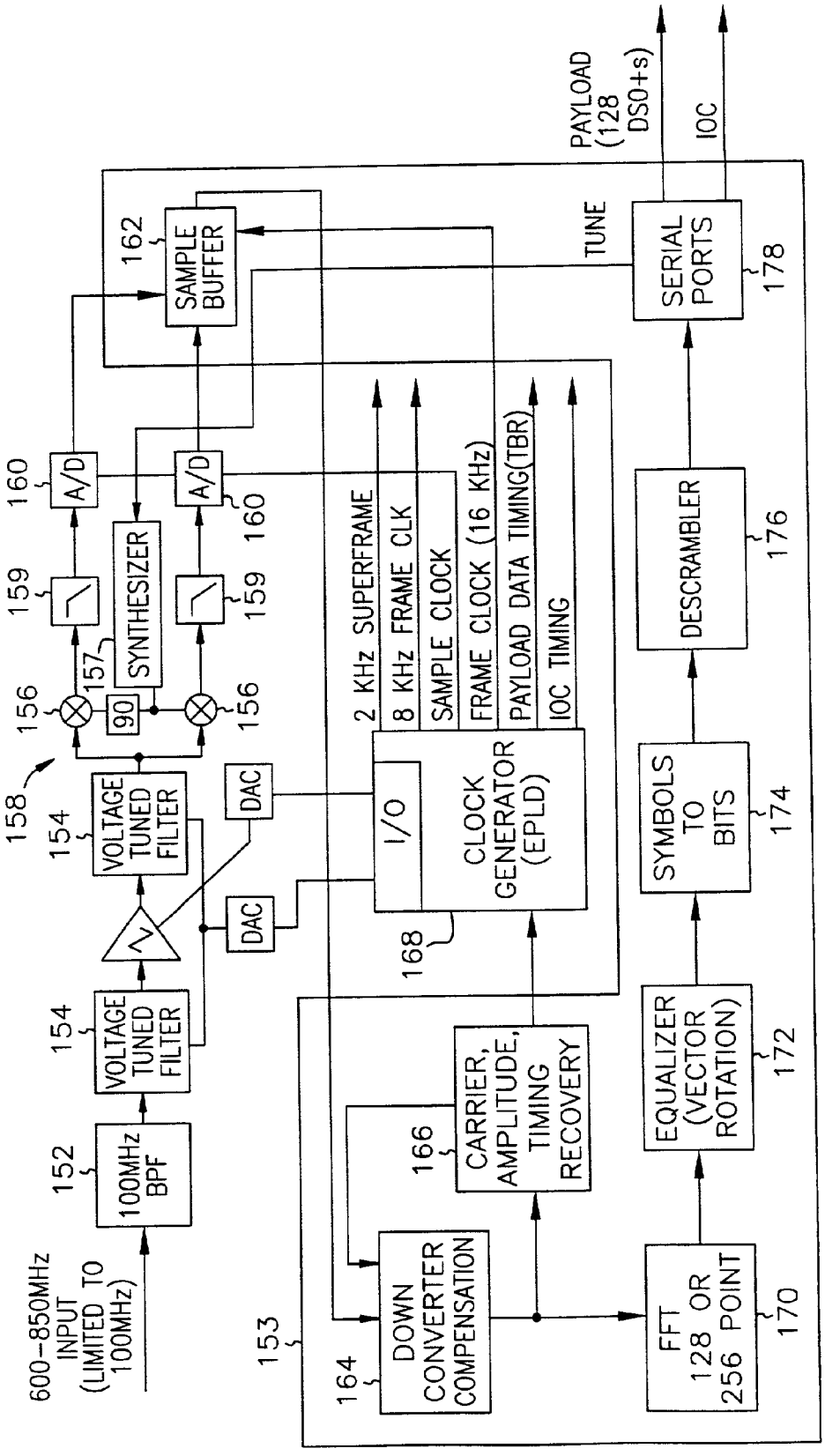
600-850MHz INPUT (LIMITED TO 100MHz)
152
100MHz BPF
154
VOLTAGE TUNED FILTER
154
VOLTAGE TUNED FILTER
158
156
157
SYNTHESIZER
90
156
159
159
160
A/D
160
A/D
162
SAMPLE BUFFER
DAC
DAC
153
164
DOWN CONVERTER COMPENSATION
166
CARRIER, AMPLITUDE, TIMING RECOVERY
168
I/O
CLOCK GENERATOR (EPLD)
2 KHz SUPERFRAME
8 KHz FRAME CLK
SAMPLE CLOCK
FRAME CLOCK (16 KHz)
PAYLOAD DATA TIMING(TBR)
IOC TIMING
170
FFT 128 OR 256 POINT
172
EQUALIZER (VECTOR ROTATION)
174
SYMBOLS TO BITS
176
DESCRAMBLER
178
SERIAL PORTS
TUNE
PAYLOAD (128 DS0+s)
IOC

FIG. 22

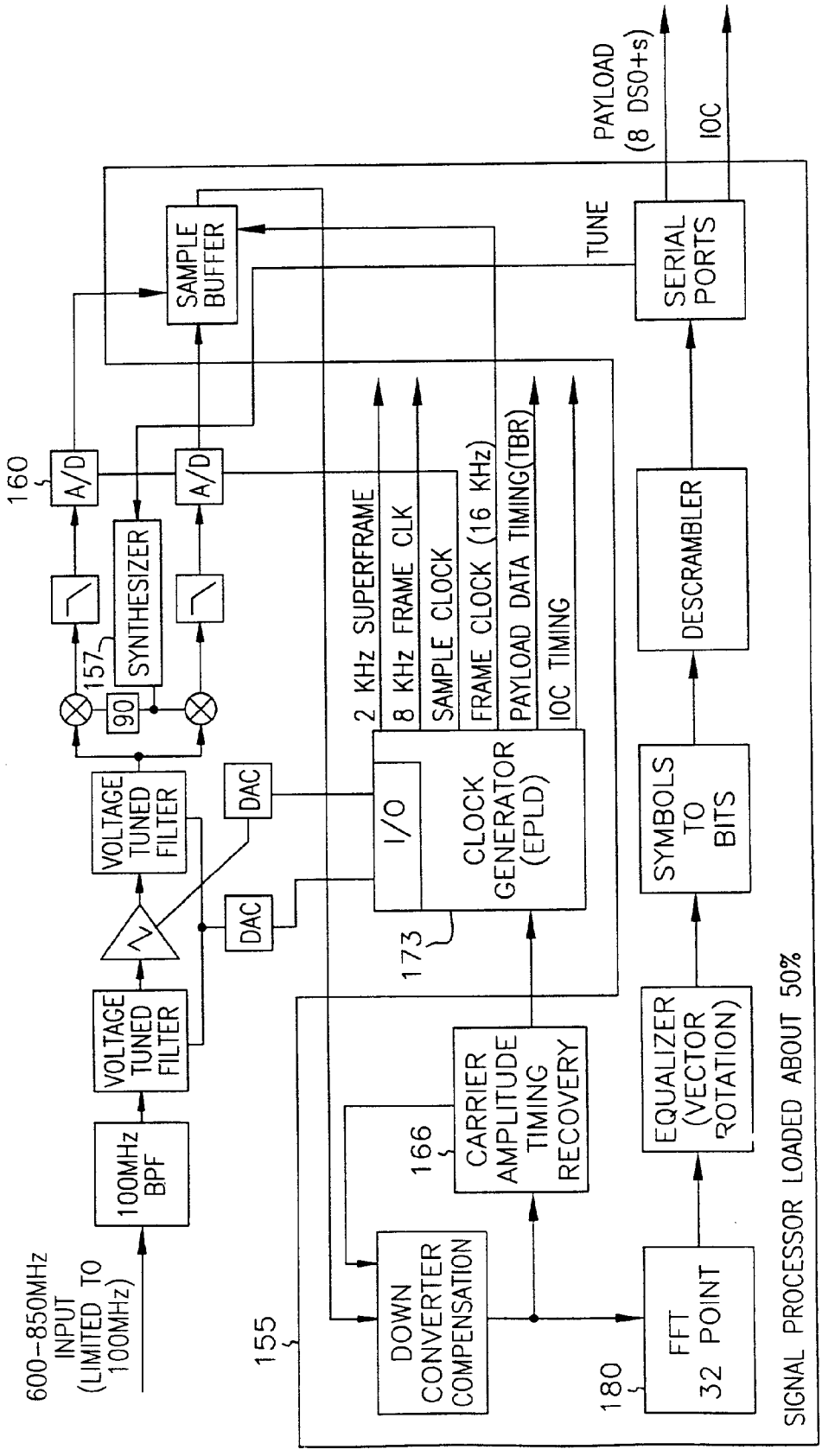
600-850MHz INPUT (LIMITED TO 100MHz)
100MHz BPF
VOLTAGE TUNED FILTER
VOLTAGE TUNED FILTER
DAC
DAC
VOLTAGE TUNED FILTER
SYNTHESIZER
157
90
160
A/D
A/D
SAMPLE BUFFER
155
DOWN CONVERTER COMPENSATION
166
CARRIER AMPLITUDE TIMING RECOVERY
180
FFT 32 POINT
EQUALIZER (VECTOR ROTATION)
SYMBOLS TO BITS
DESCRAMBLER
SERIAL PORTS
TUNE
PAYLOAD (8 DS0+s)
IOC
173
I/O
CLOCK GENERATOR (EPLD)
2 KHz SUPERFRAME
8 KHz FRAME CLK
SAMPLE CLOCK
FRAME CLOCK (16 KHz)
PAYLOAD DATA TIMING(TBR)
IOC TIMING
SIGNAL PROCESSOR LOADED ABOUT 50%

FIG. 23

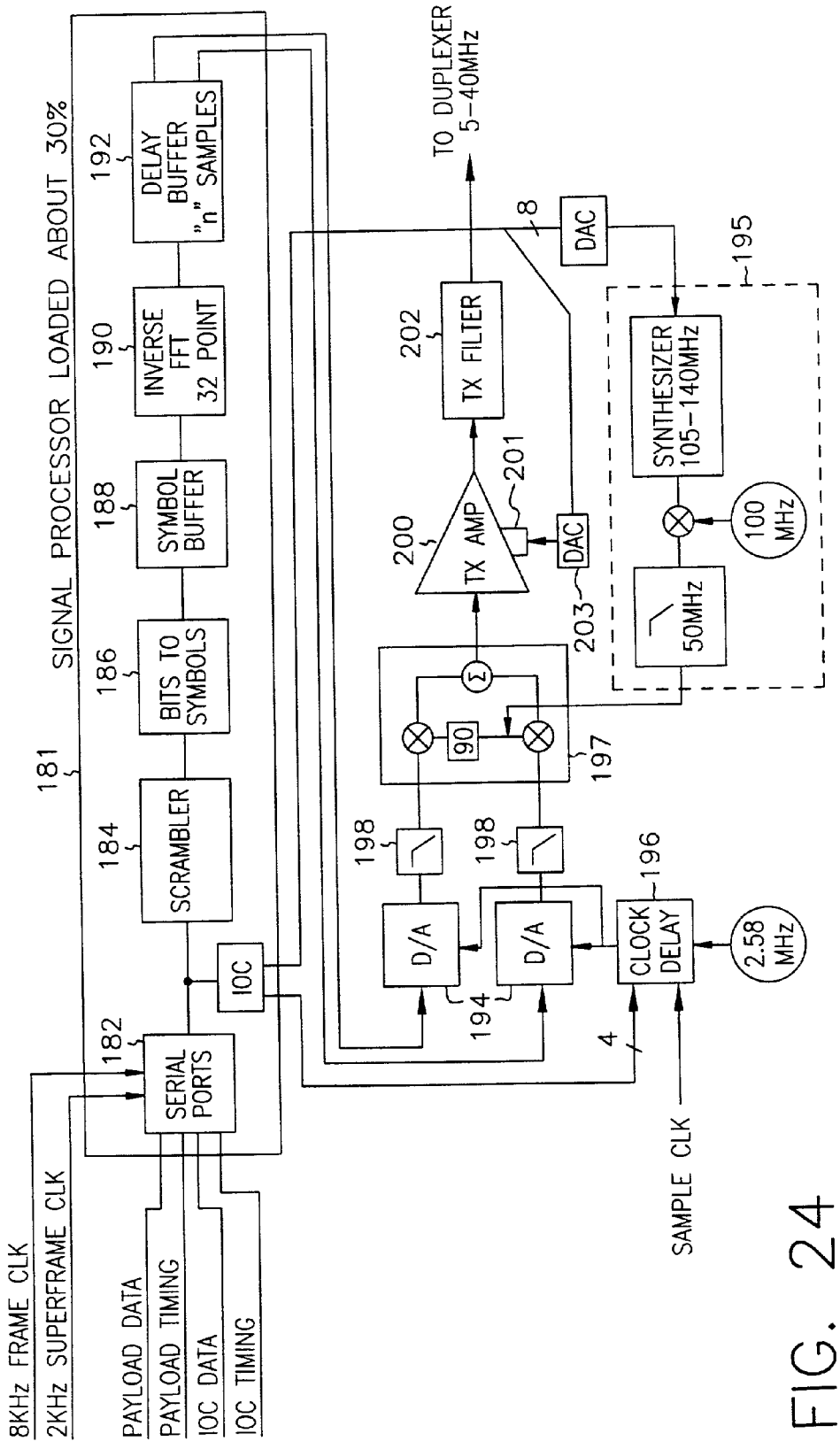
8KHz FRAME CLK
2KHz SUPERFRAME CLK
PAYLOAD DATA
PAYLOAD TIMING
IOC DATA
IOC TIMING
SIGNAL PROCESSOR LOADED ABOUT 30%
181
182
SERIAL PORTS
IOC
184
SCRAMBLER
186
BITS TO SYMBOLS
188
SYMBOL BUFFER
190
INVERSE FFT 32 POINT
192
DELAY BUFFER "n" SAMPLES
TO DUPLEXER 5-40MHz
8
DAC
195
202
TX FILTER
200
TX AMP
201
DAC
203
SYNTHESIZER 105-140MHz
100 MHz
50MHz
90
197
198
198
D/A
D/A
194
4
196
CLOCK DELAY
2.58 MHz
SAMPLE CLK

FIG. 24

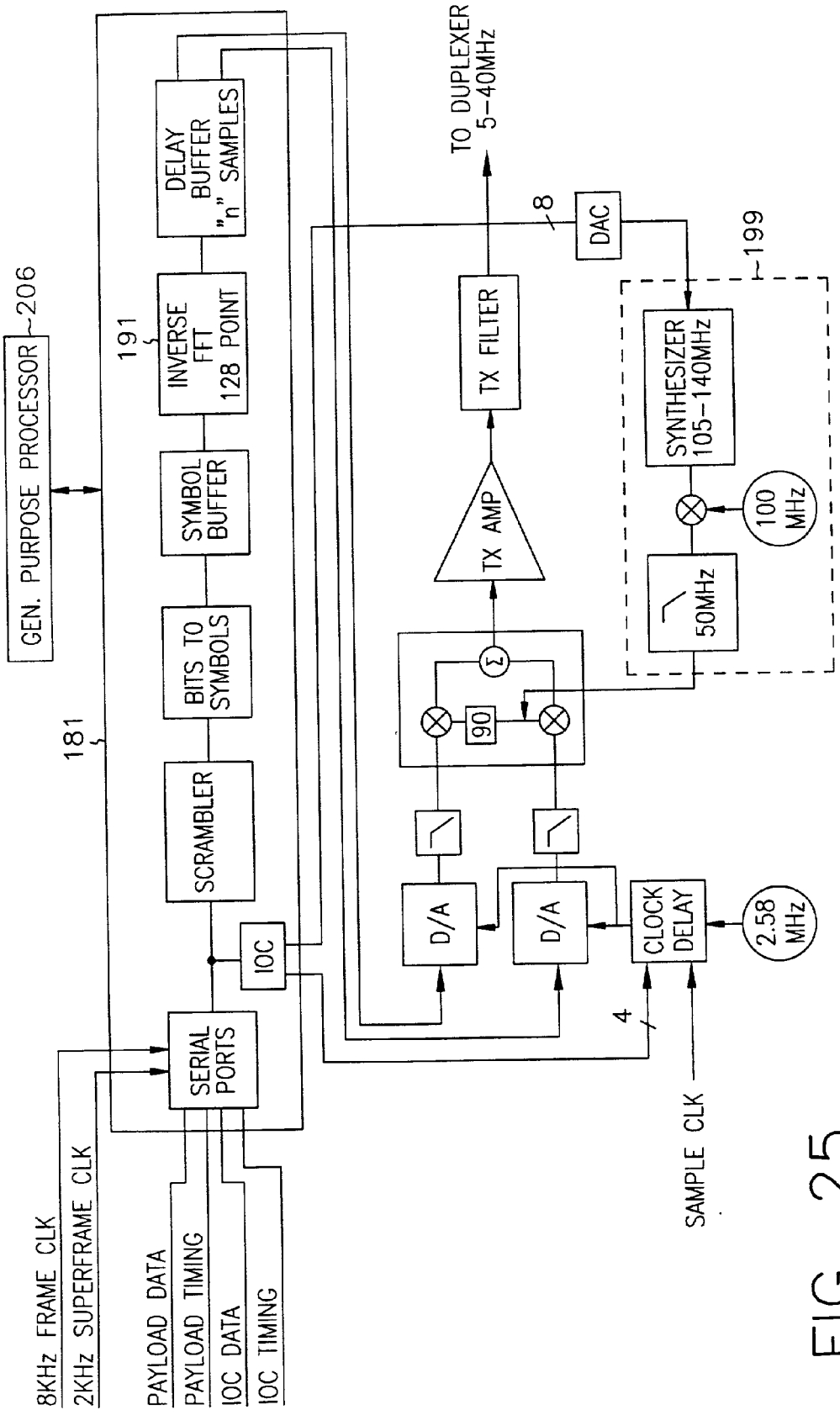
GEN. PURPOSE PROCESSOR
206
191
181
INVERSE FFT 128 POINT
DELAY BUFFER "n" SAMPLES
SYMBOL BUFFER
BITS TO SYMBOLS
SCRAMBLER
IOC
SERIAL PORTS
TO DUPLEXER 5-40MHz
TX FILTER
TX AMP
DAC
8
199
SYNTHESIZER 105-140MHz
100 MHz
50MHz
90
D/A
D/A
CLOCK DELAY
2.58 MHz
4
SAMPLE CLK
8KHz FRAME CLK
2KHz SUPERFRAME CLK
PAYLOAD DATA
PAYLOAD TIMING
IOC DATA
IOC TIMING

FIG. 25

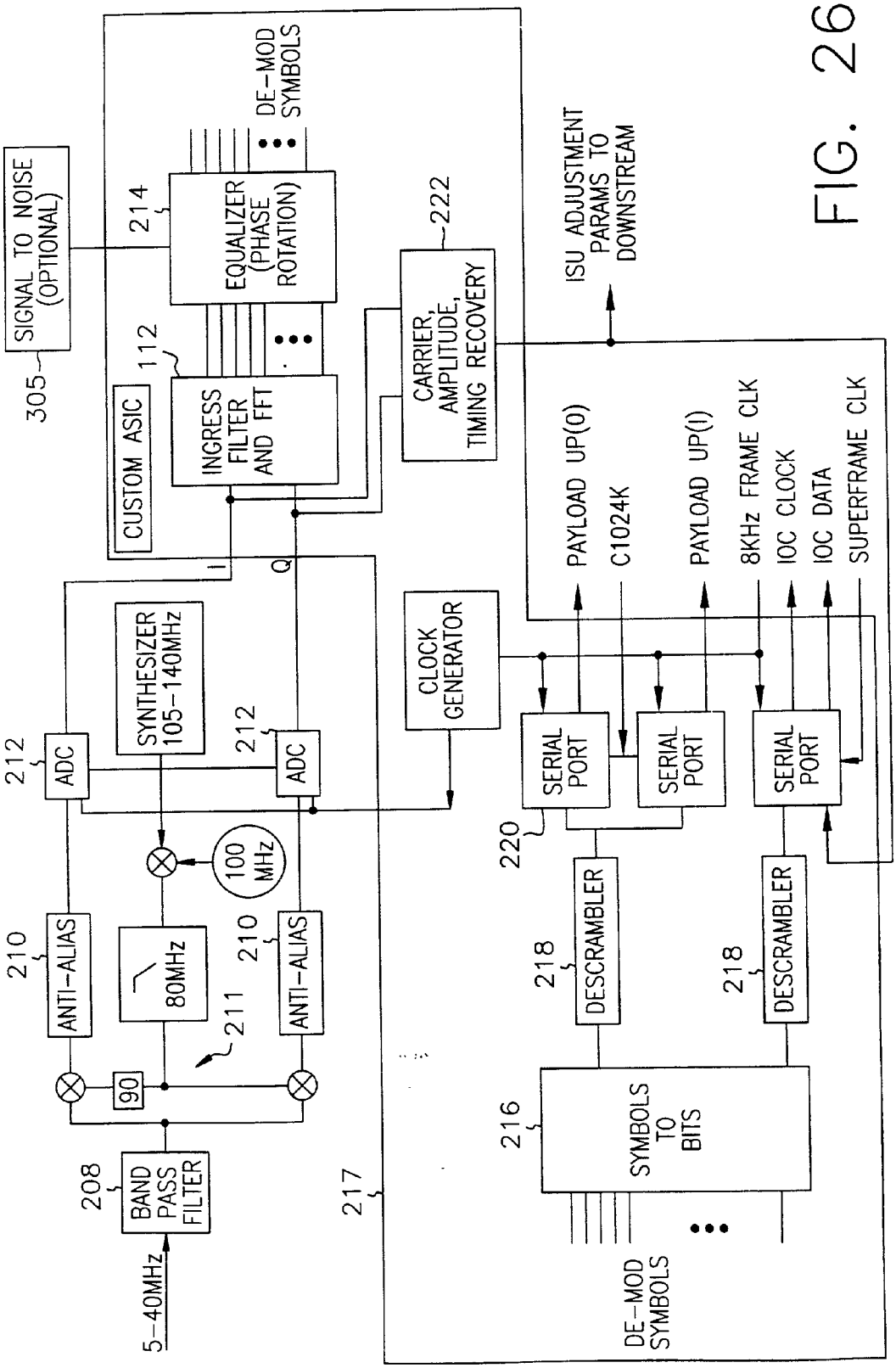
SIGNAL TO NOISE (OPTIONAL)
305
CUSTOM ASIC
112
INGRESS FILTER AND FFT
EQUALIZER (PHASE ROTATION)
214
DE-MOD SYMBOLS
CARRIER, AMPLITUDE, TIMING RECOVERY
222
ISU ADJUSTMENT PARAMS TO DOWNSTREAM
PAYLOAD UP(0)
C1024K
PAYLOAD UP(I)
8KHz FRAME CLK
IOC CLOCK
IOC DATA
SUPERFRAME CLK
I
Q
SYNTHESIZER 105-140MHz
CLOCK GENERATOR
212
ADC
212
ADC
100 MHz
210
ANTI-ALIAS
80MHz
211
210
ANTI-ALIAS
90
208
BAND PASS FILTER
5-40MHz
217
SERIAL PORT
SERIAL PORT
SERIAL PORT
220
218
DESCRAMBLER
218
DESCRAMBLER
216
SYMBOLS TO BITS
DE-MOD SYMBOLS

FIG. 26

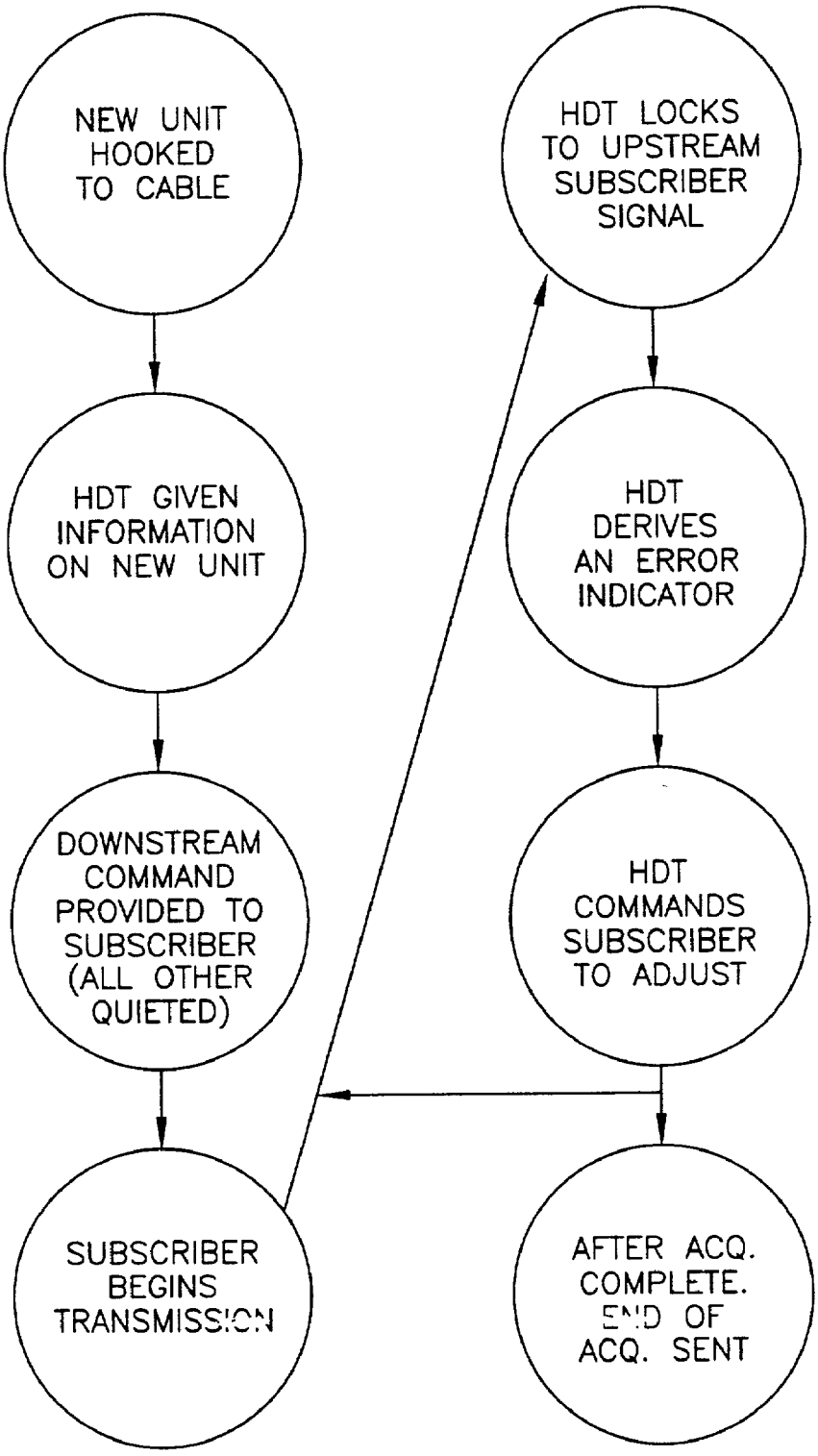
NEW UNIT HOOKED TO CABLE
HDT GIVEN INFORMATION ON NEW UNIT
DOWNSTREAM COMMAND PROVIDED TO SUBSCRIBER (ALL OTHER QUIETED)
SUBSCRIBER BEGINS TRANSMISSION
HDT LOCKS TO UPSTREAM SUBSCRIBER SIGNAL
HDT DERIVES AN ERROR INDICATOR
HDT COMMANDS SUBSCRIBER TO ADJUST
AFTER ACQ. COMPLETE. END OF ACQ. SENT

FIG. 27

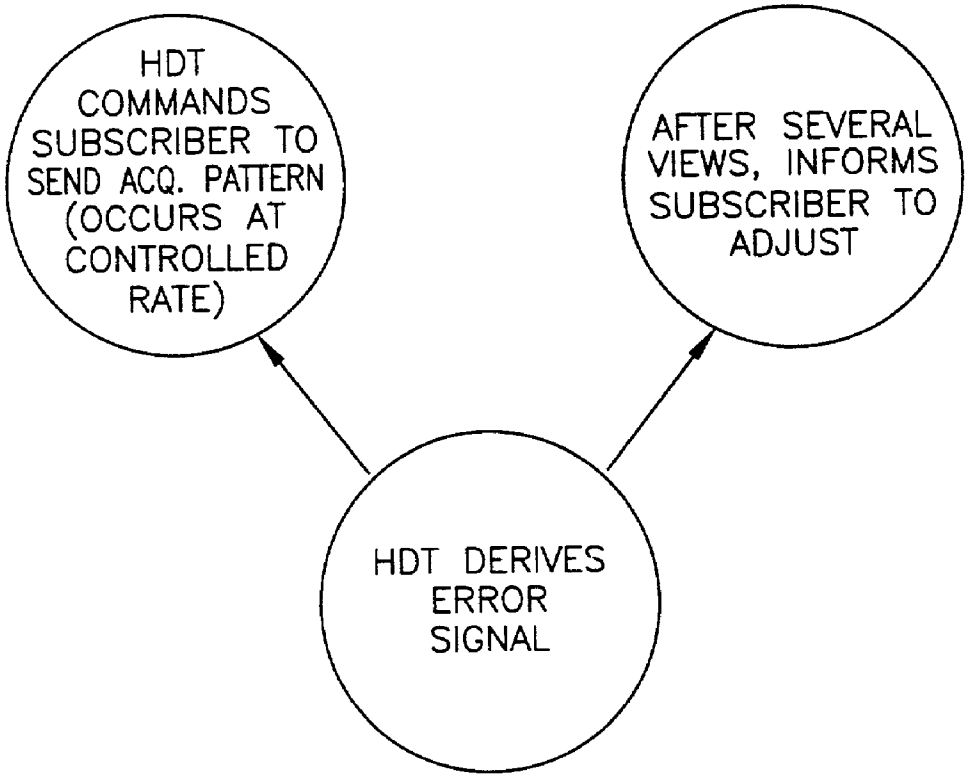
HDT COMMANDS SUBSCRIBER TO SEND ACQ. PATTERN (OCCURS AT CONTROLLED RATE)
AFTER SEVERAL VIEWS, INFORMS SUBSCRIBER TO ADJUST
HDT DERIVES ERROR SIGNAL

FIG. 28

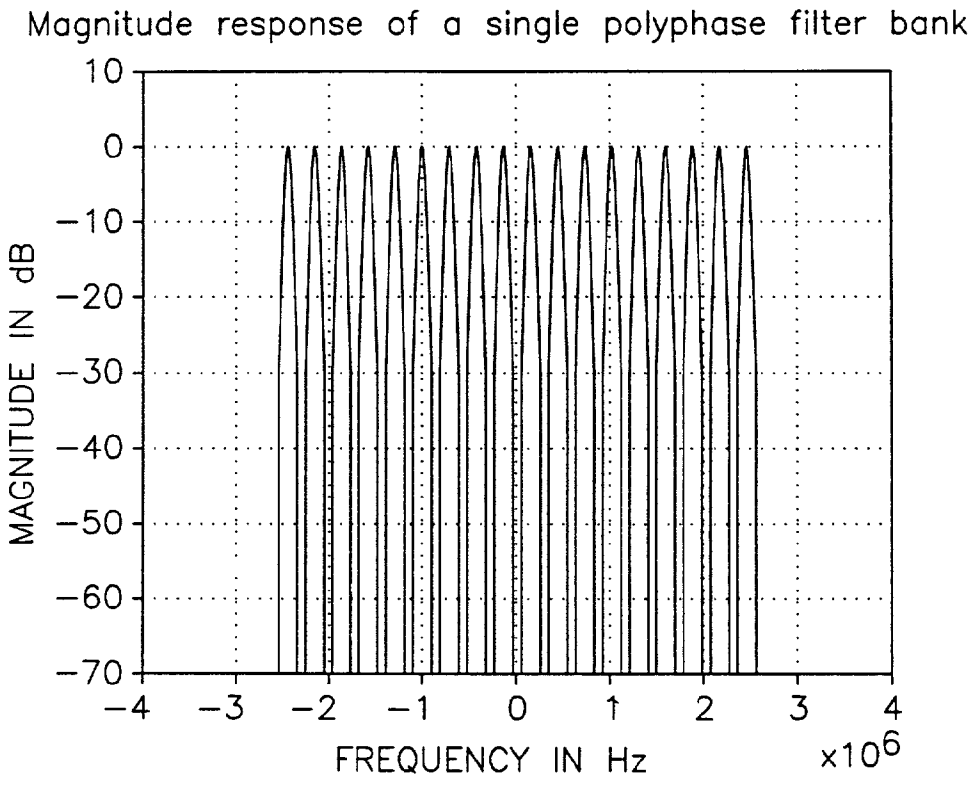
Magnitude response of a single polyphase filter bank
MAGNITUDE IN dB
10
0
−10
−20
−30
−40
−50
−60
−70
−4
−3
−2
−1
0
1
2
3
4
FREQUENCY IN Hz
x10^6

FIG. 29

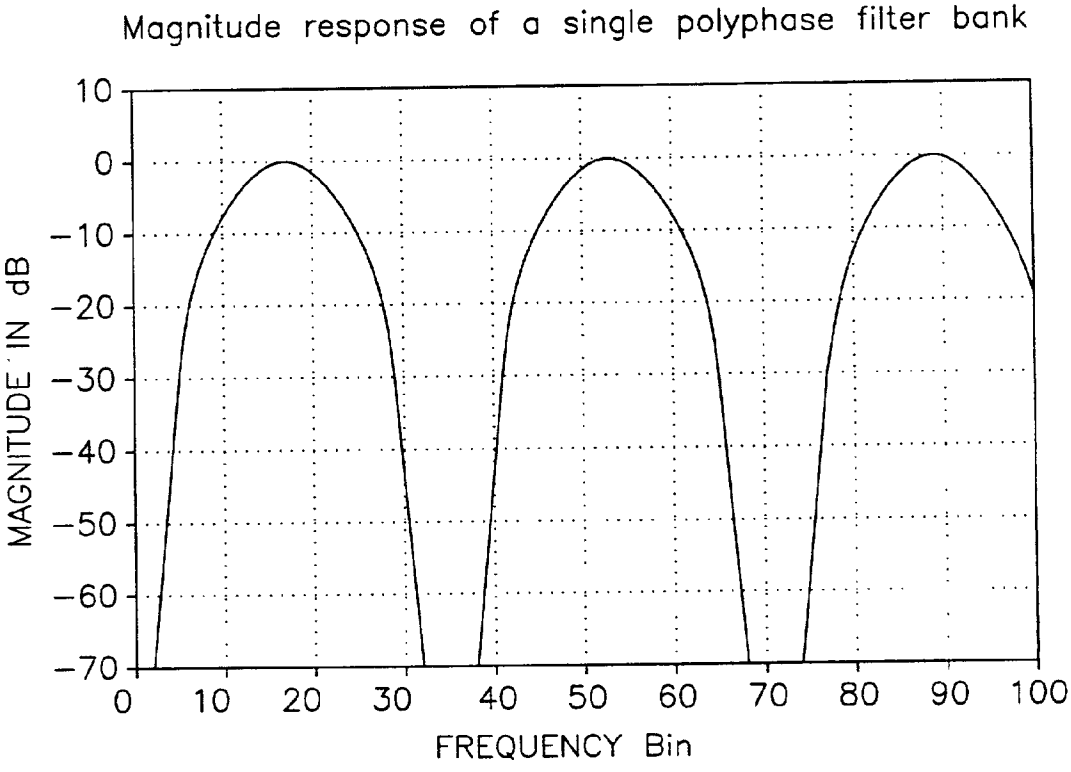
Magnitude response of a single polyphase filter bank
MAGNITUDE IN dB
10
0
−10
−20
−30
−40
−50
−60
−70
0
10
20
30
40
50
60
70
80
90
100
FREQUENCY Bin

FIG. 30

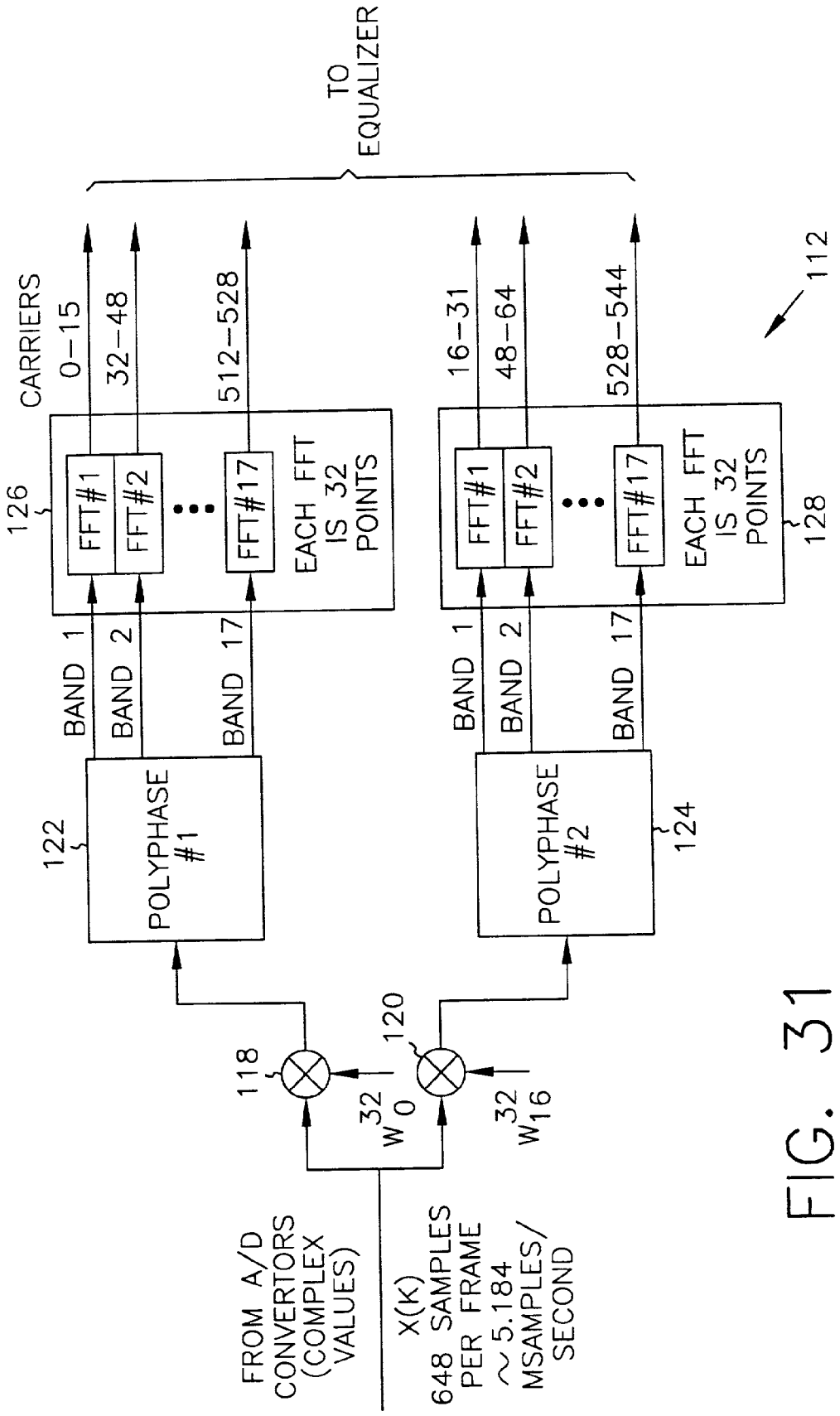
TO EQUALIZER
CARRIERS
0–15
32–48
512–528
16–31
48–64
528–544
126
128
112
FFT#1
FFT#2
FFT#17
EACH FFT IS 32 POINTS
BAND 1
BAND 2
BAND 17
122
124
POLYPHASE #1
POLYPHASE #2
118
120
W_0^{32}
W_{16}^{32}
FROM A/D CONVERTORS (COMPLEX VALUES)
X(K)
648 SAMPLES PER FRAME
~5.184 MSAMPLES/ SECOND

FIG. 31

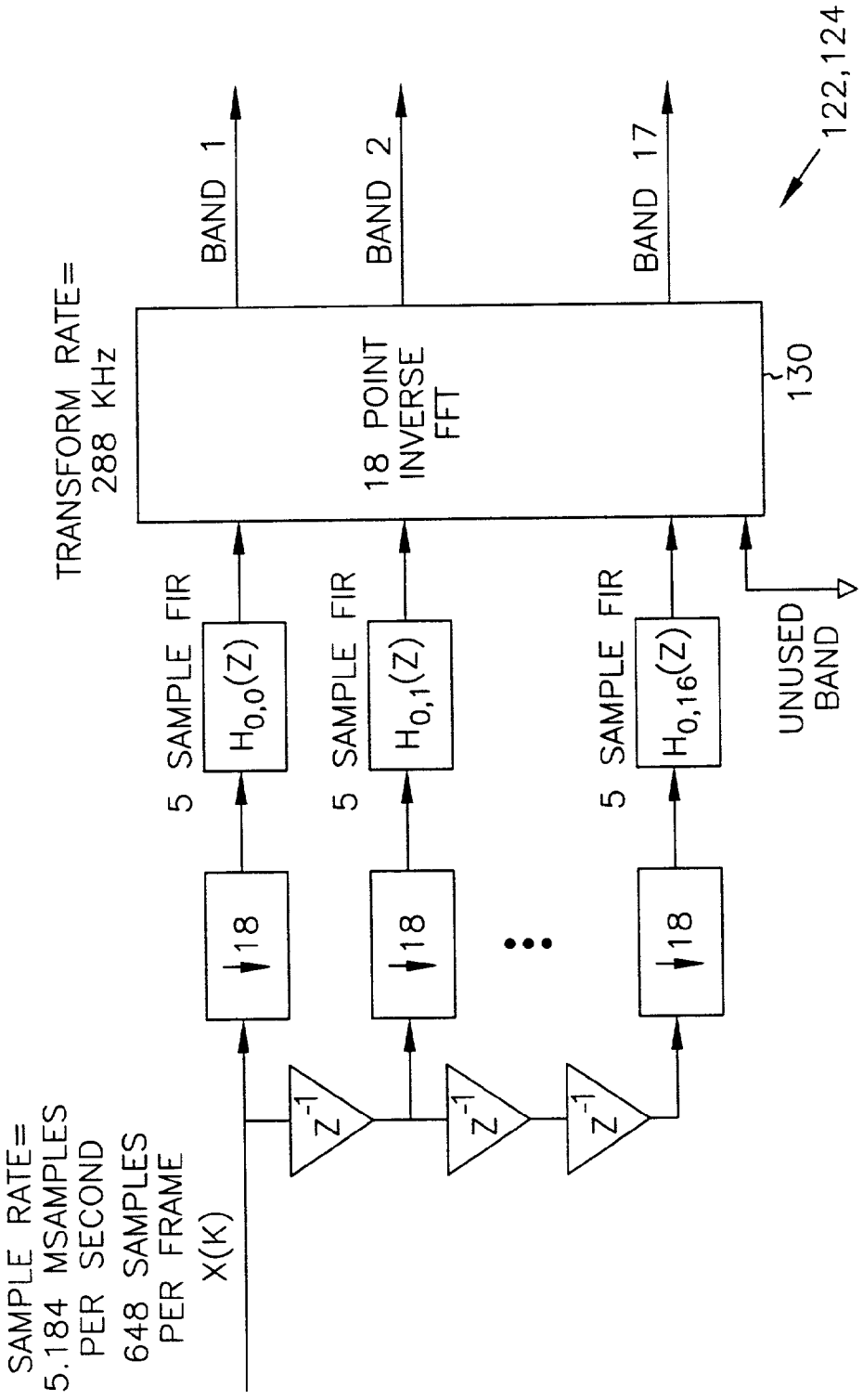
SAMPLE RATE=
5.184 MSAMPLES
PER SECOND
648 SAMPLES
PER FRAME
X(K)
Z^{-1}
18
5 SAMPLE FIR
$H_{0,0}(Z)$
$H_{0,1}(Z)$
$H_{0,16}(Z)$
TRANSFORM RATE=
288 KHz
18 POINT
INVERSE
FFT
130
BAND 1
BAND 2
BAND 17
UNUSED
BAND
122,124

FIG. 32

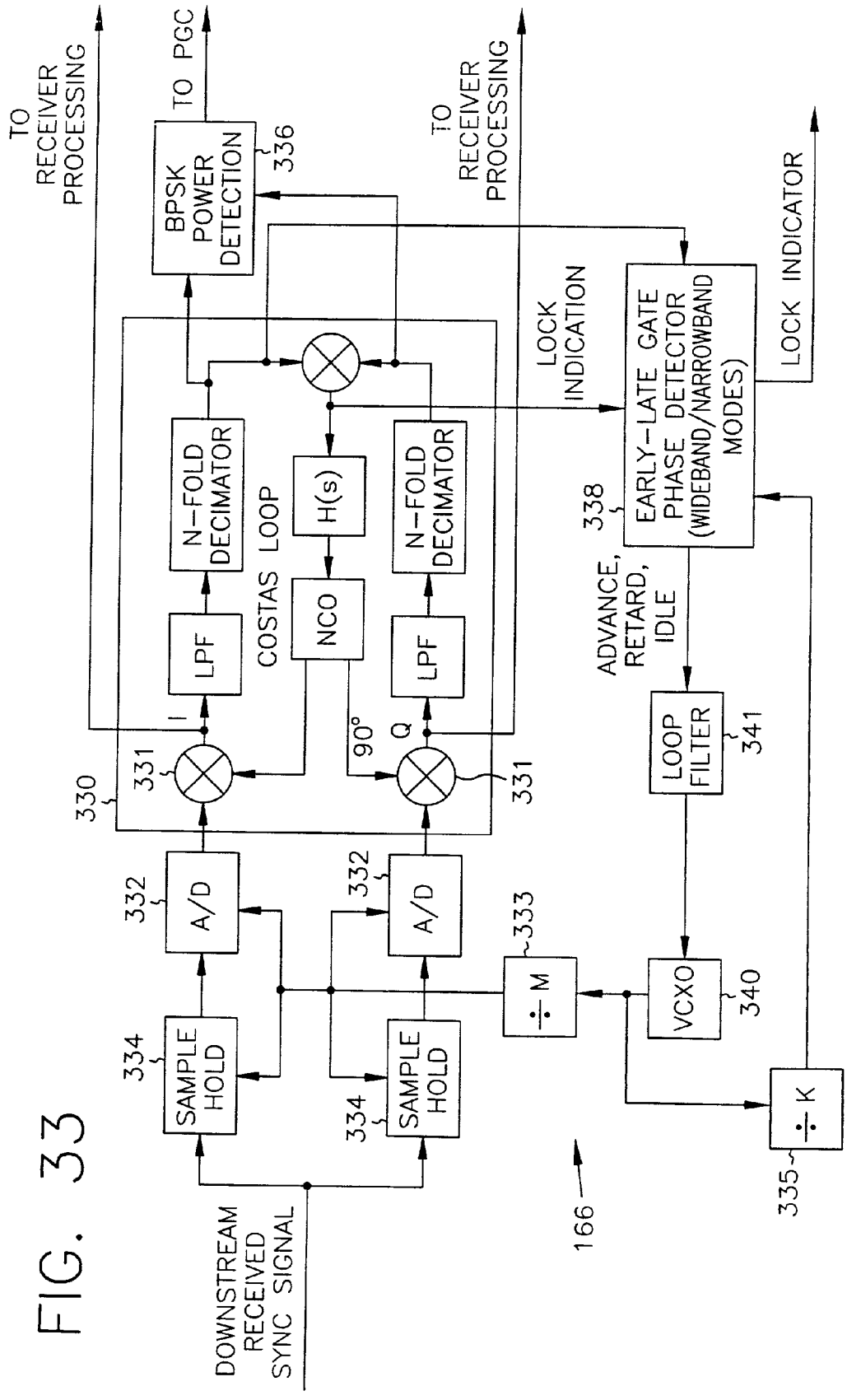
TO RECEIVER PROCESSING
TO PGC
BPSK POWER DETECTION
336
TO RECEIVER PROCESSING
LOCK INDICATION
EARLY-LATE GATE PHASE DETECTOR (WIDEBAND/NARROWBAND MODES)
338
LOCK INDICATOR
N-FOLD DECIMATOR
H(s)
N-FOLD DECIMATOR
COSTAS LOOP
NCO
LPF
LPF
I
Q
90°
331
331
330
ADVANCE, RETARD, IDLE
LOOP FILTER
341
332
A/D
332
A/D
333
÷ M
VCXO
340
334
SAMPLE HOLD
334
SAMPLE HOLD
÷ K
335
DOWNSTREAM RECEIVED SYNC SIGNAL
166

FIG. 33

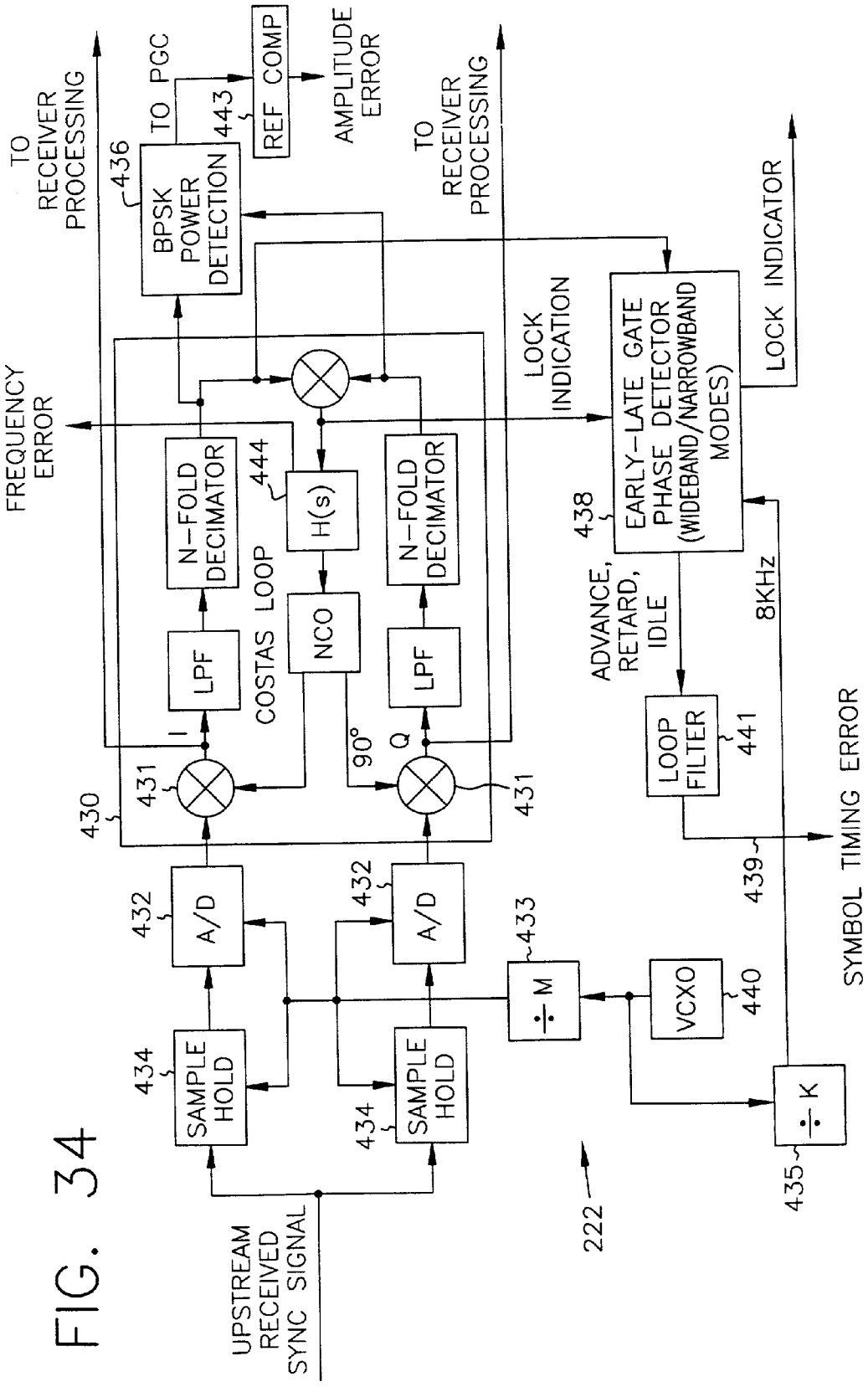
TO RECEIVER PROCESSING
TO PGC
AMPLITUDE ERROR
436
BPSK POWER DETECTION
443
REF COMP
TO RECEIVER PROCESSING
FREQUENCY ERROR
LOCK INDICATION
LOCK INDICATOR
438
EARLY-LATE GATE PHASE DETECTOR (WIDEBAND/NARROWBAND MODES)
N-FOLD DECIMATOR
444
H(s)
N-FOLD DECIMATOR
COSTAS LOOP
NCO
LPF
LPF
I
Q
90°
ADVANCE, RETARD, IDLE
8KHz
LOOP FILTER
441
430
431
431
A/D
A/D
432
432
433
÷ M
VCXO
440
439
SYMBOL TIMING ERROR
SAMPLE HOLD
SAMPLE HOLD
434
434
÷ K
435
222
UPSTREAM RECEIVED SYNC SIGNAL

FIG. 34

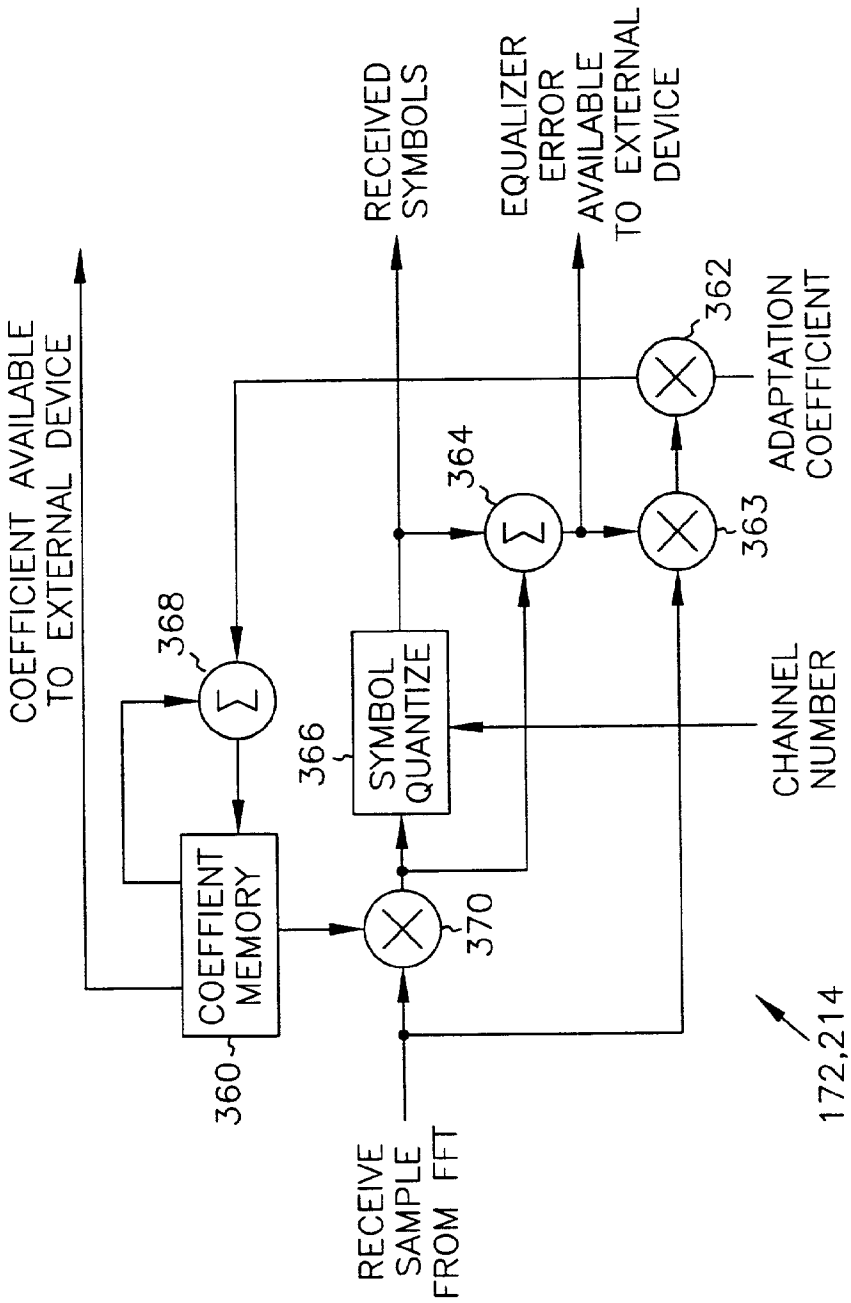
COEFFICIENT AVAILABLE TO EXTERNAL DEVICE
RECEIVED SYMBOLS
EQUALIZER ERROR AVAILABLE TO EXTERNAL DEVICE
362
ADAPTATION COEFFICIENT
364
363
368
366
SYMBOL QUANTIZE
CHANNEL NUMBER
COEFFIENT MEMORY
370
360
RECEIVE SAMPLE FROM FFT
172,214

FIG. 35

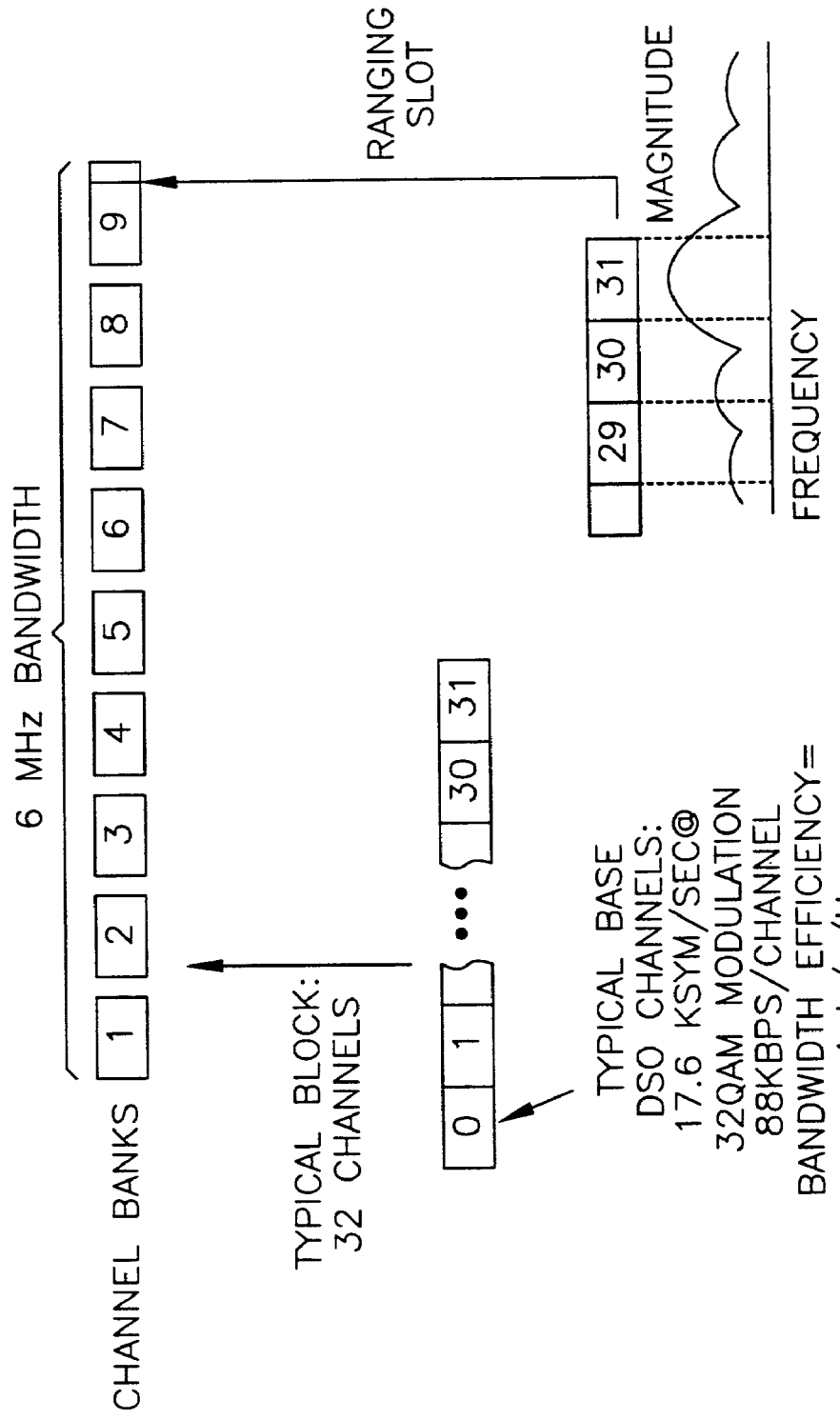
6 MHz BANDWIDTH
CHANNEL BANKS
1
2
3
4
5
6
7
8
9
RANGING SLOT
TYPICAL BLOCK: 32 CHANNELS
0
1
30
31
MAGNITUDE
29
30
31
FREQUENCY
TYPICAL BASE DSO CHANNELS:
17.6 KSYM/SEC@
32QAM MODULATION
88KBPS/CHANNEL
BANDWIDTH EFFICIENCY=
4 b/s/Hz

FIG. 36

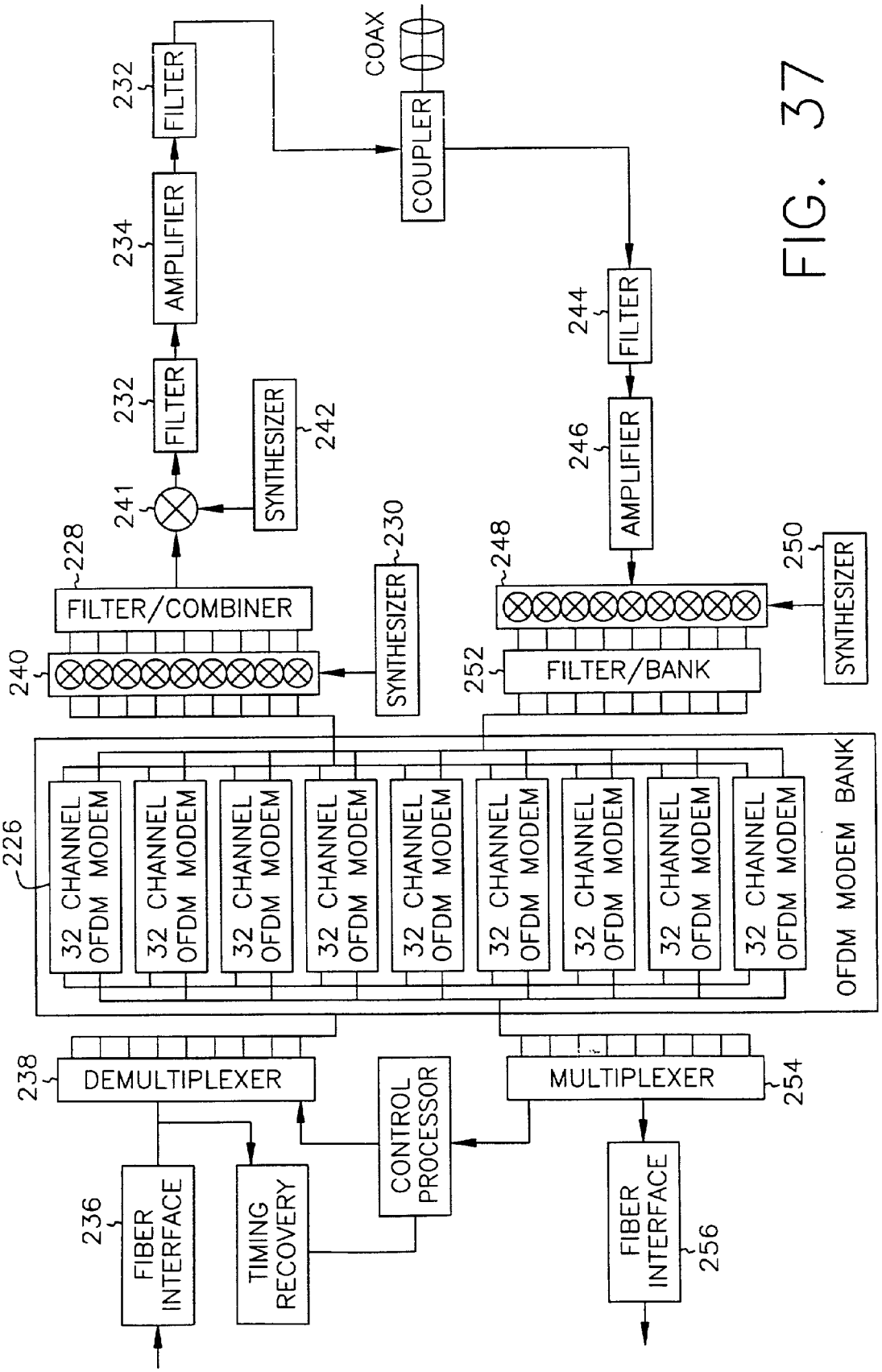
COAX
COUPLER
FILTER
232
AMPLIFIER
234
FILTER
232
SYNTHESIZER
242
241
FILTER/COMBINER
228
240
SYNTHESIZER
230
FILTER
244
AMPLIFIER
246
248
SYNTHESIZER
250
FILTER/BANK
252
226
32 CHANNEL OFDM MODEM
OFDM MODEM BANK
DEMULTIPLEXER
238
MULTIPLEXER
254
CONTROL PROCESSOR
FIBER INTERFACE
236
TIMING RECOVERY
FIBER INTERFACE
256

FIG. 37

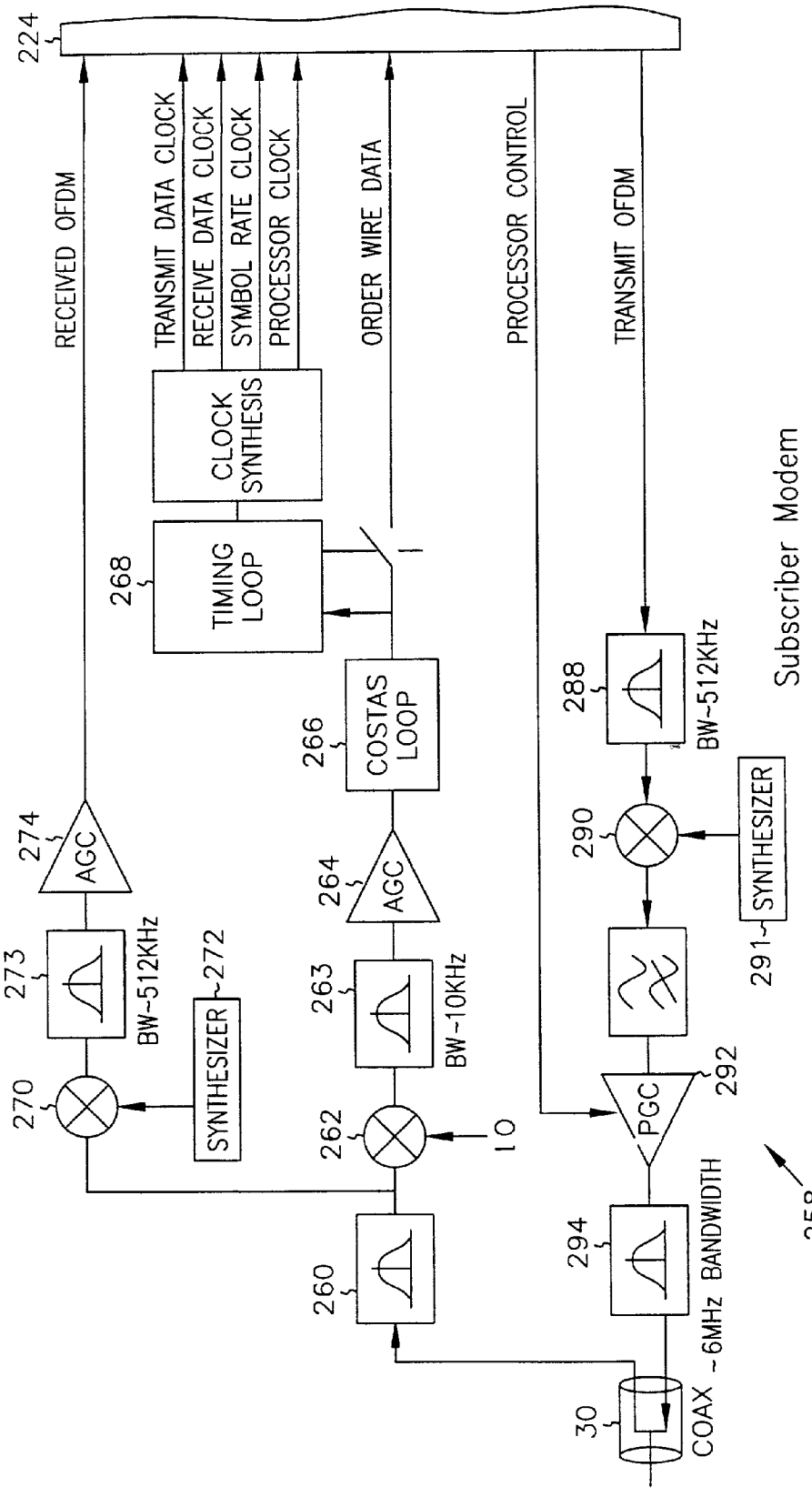
224
RECEIVED OFDM
TRANSMIT DATA CLOCK
RECEIVE DATA CLOCK
SYMBOL RATE CLOCK
PROCESSOR CLOCK
ORDER WIRE DATA
PROCESSOR CONTROL
TRANSMIT OFDM
CLOCK SYNTHESIS
268
TIMING LOOP
1
266
COSTAS LOOP
274
AGC
264
AGC
288
BW-512KHz
290
SYNTHESIZER
291
273
BW-512KHz
272
SYNTHESIZER
270
263
BW-10KHz
262
10
PGC
292
260
294
30
COAX ~6MHz BANDWIDTH
258
Subscriber Modem

FIG. 38

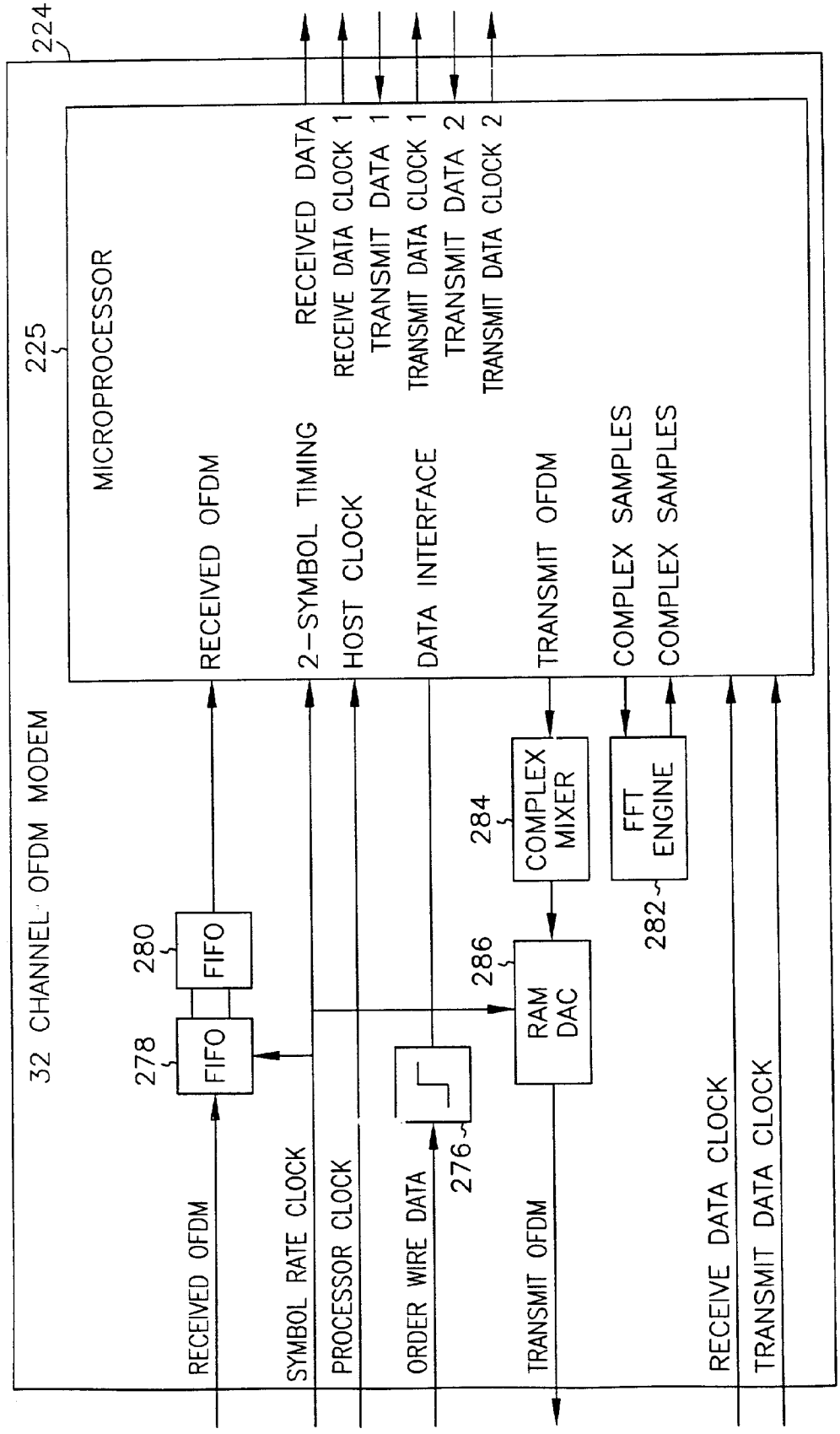
224
225
MICROPROCESSOR
32 CHANNEL OFDM MODEM
RECEIVED OFDM
2-SYMBOL TIMING
HOST CLOCK
DATA INTERFACE
TRANSMIT OFDM
COMPLEX SAMPLES
COMPLEX SAMPLES
RECEIVED DATA
RECEIVE DATA CLOCK 1
TRANSMIT DATA 1
TRANSMIT DATA CLOCK 1
TRANSMIT DATA 2
TRANSMIT DATA CLOCK 2
280
FIFO
278
FIFO
284
COMPLEX MIXER
286
RAM DAC
282
FFT ENGINE
276
RECEIVED OFDM
SYMBOL RATE CLOCK
PROCESSOR CLOCK
ORDER WIRE DATA
TRANSMIT OFDM
RECEIVE DATA CLOCK
TRANSMIT DATA CLOCK

FIG. 39

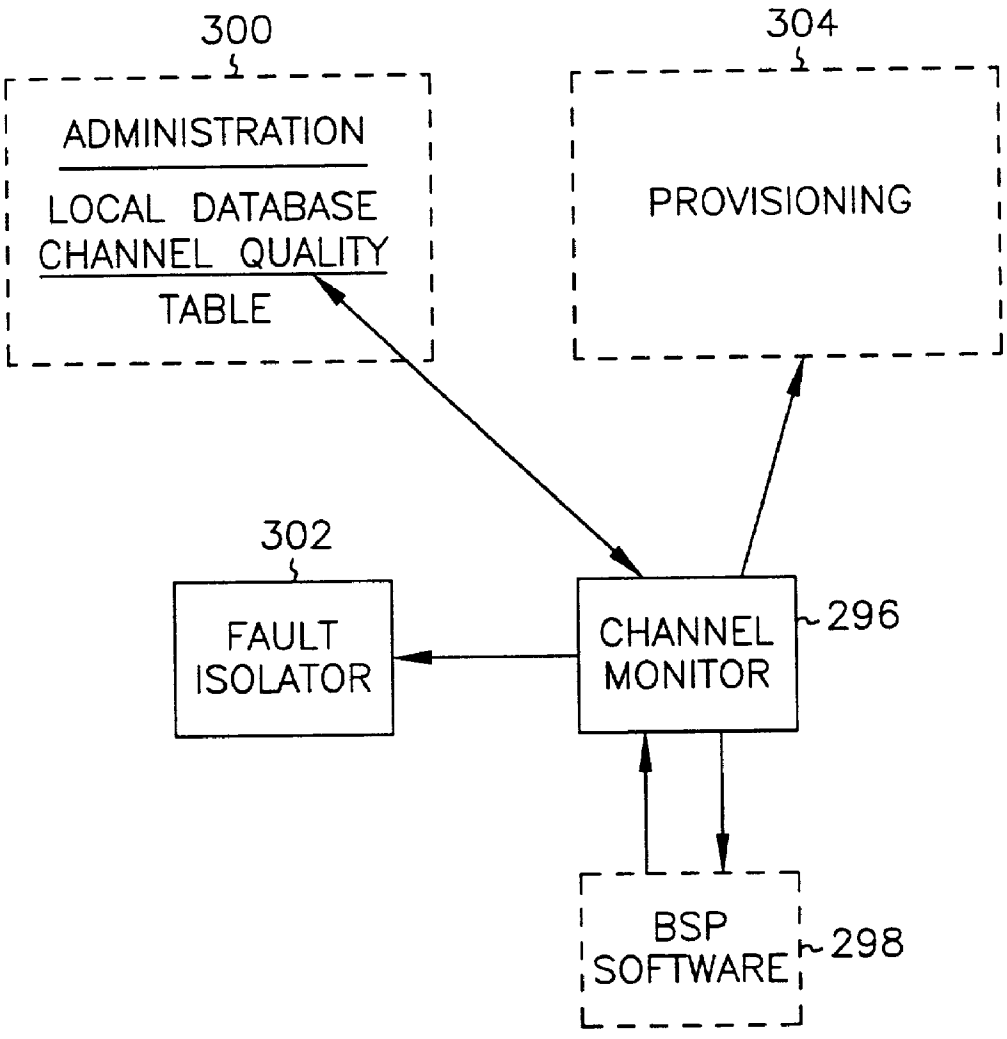
300
ADMINISTRATION
LOCAL DATABASE
CHANNEL QUALITY
TABLE
304
PROVISIONING
302
FAULT
ISOLATOR
CHANNEL
MONITOR
296
BSP
SOFTWARE
298

FIG. 40

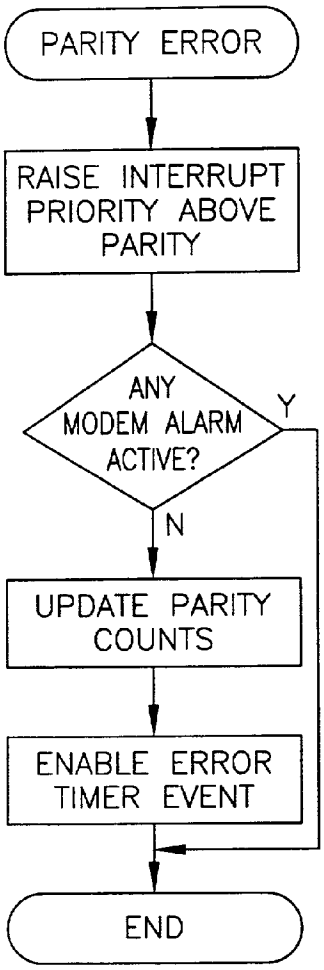

FIG. 41

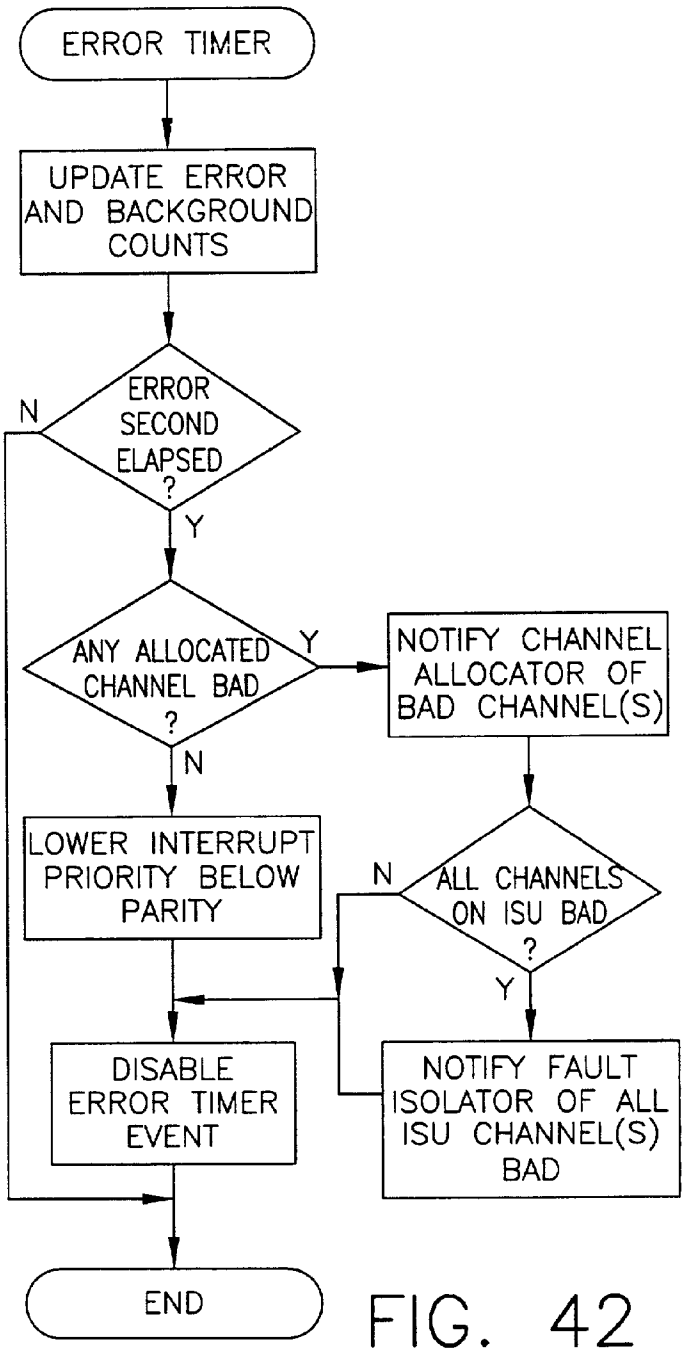

FIG. 42

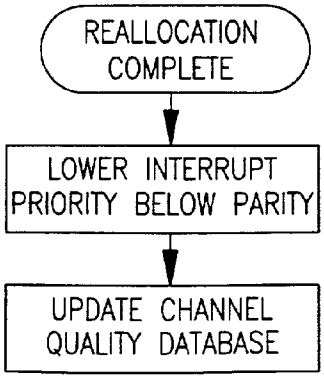

FIG. 43

FIG. 44

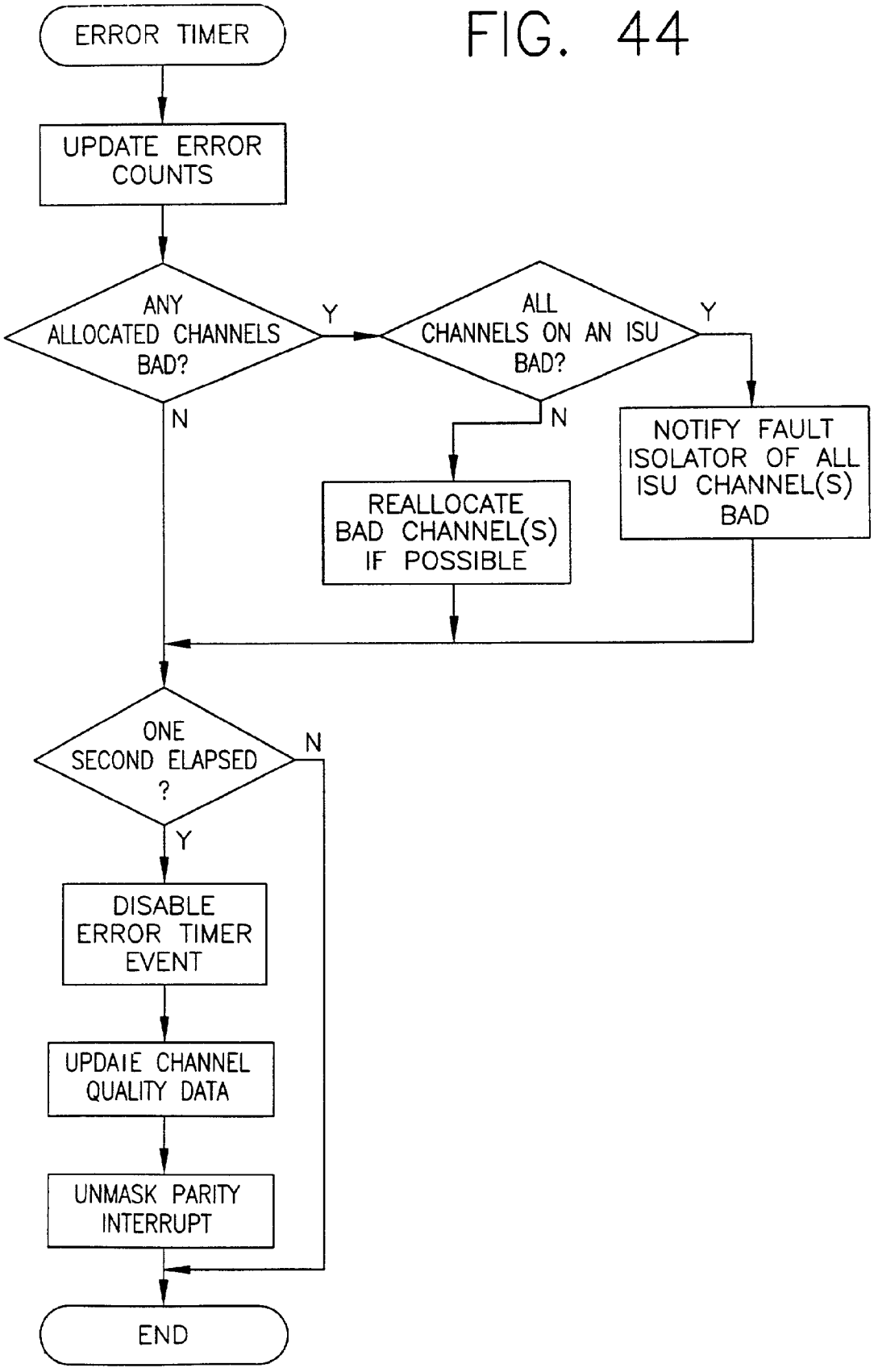
ERROR TIMER
UPDATE ERROR COUNTS
ANY ALLOCATED CHANNELS BAD?
Y
ALL CHANNELS ON AN ISU BAD?
Y
N
N
NOTIFY FAULT ISOLATOR OF ALL ISU CHANNEL(S) BAD
REALLOCATE BAD CHANNEL(S) IF POSSIBLE
ONE SECOND ELAPSED ?
N
Y
DISABLE ERROR TIMER EVENT
UPDAIE CHANNEL QUALITY DATA
UNMASK PARITY INTERRUPT
END

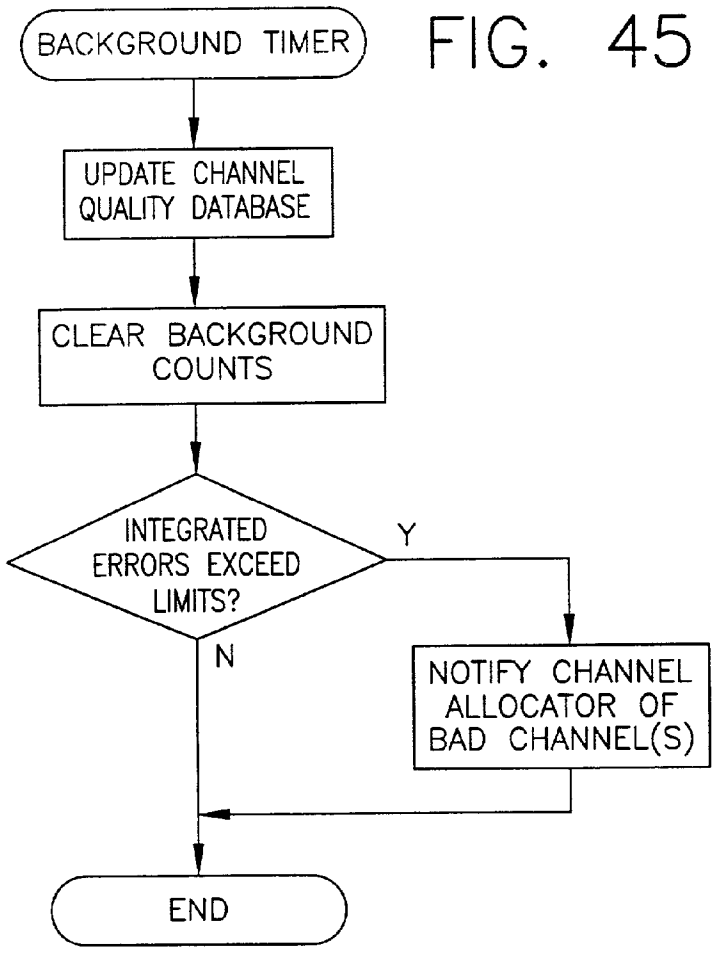
BACKGROUND TIMER
UPDATE CHANNEL QUALITY DATABASE
CLEAR BACKGROUND COUNTS
INTEGRATED ERRORS EXCEED LIMITS?
Y
N
NOTIFY CHANNEL ALLOCATOR OF BAD CHANNEL(S)
END

FIG. 45

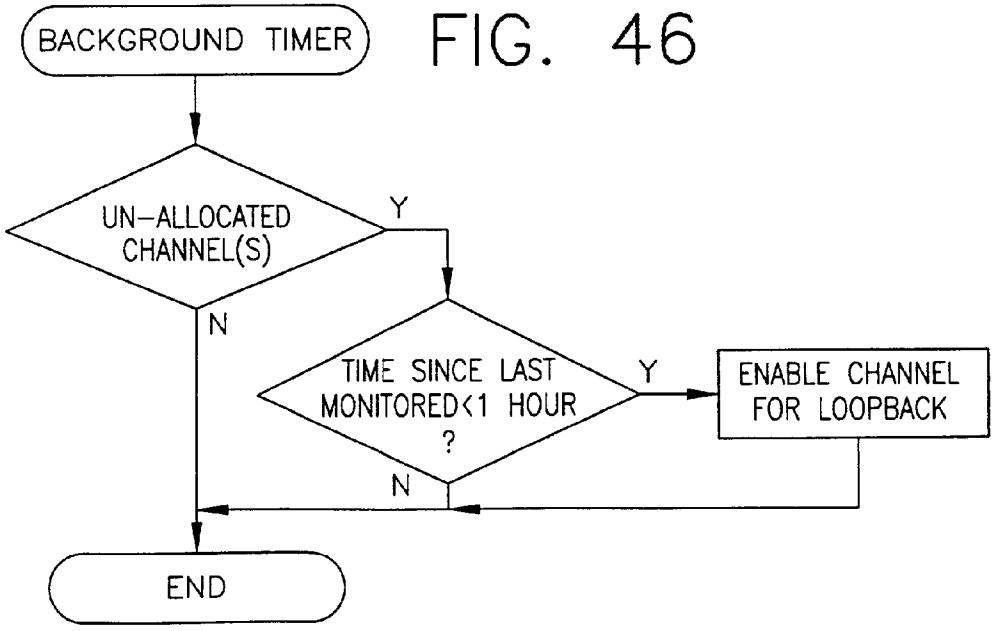
BACKGROUND TIMER
UN-ALLOCATED CHANNEL(S)
Y
N
TIME SINCE LAST MONITORED<1 HOUR ?
Y
N
ENABLE CHANNEL FOR LOOPBACK
END

FIG. 46

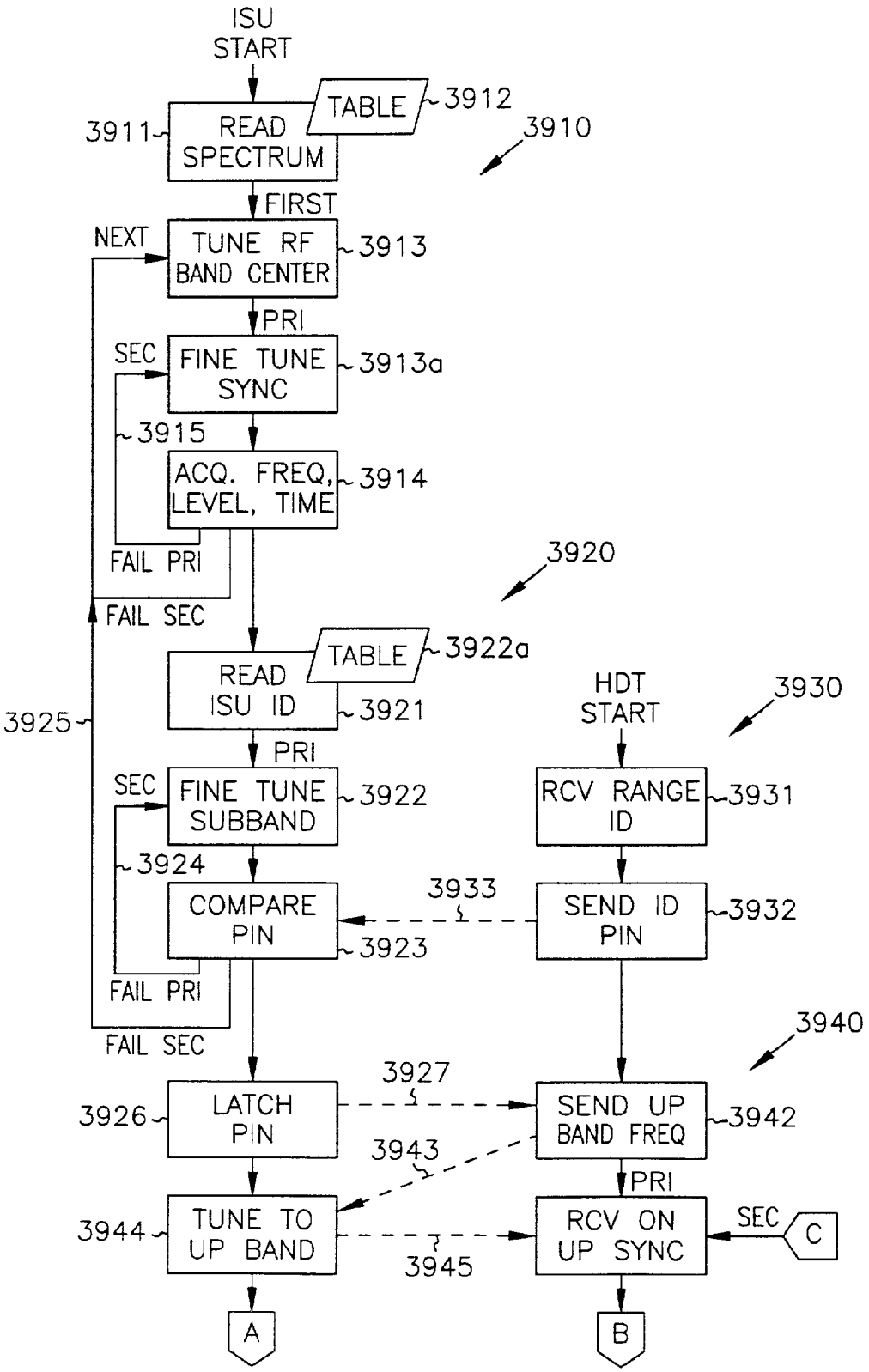
ISU START
TABLE
3912
3911
READ SPECTRUM
3910
FIRST
NEXT
TUNE RF BAND CENTER
3913
PRI
SEC
FINE TUNE SYNC
3913a
3915
ACQ. FREQ, LEVEL, TIME
3914
FAIL PRI
FAIL SEC
3920
TABLE
3922a
READ ISU ID
3921
3925
PRI
SEC
FINE TUNE SUBBAND
3922
3924
COMPARE PIN
3923
FAIL PRI
FAIL SEC
HDT START
3930
RCV RANGE ID
3931
3933
SEND ID PIN
3932
3940
3927
3926
LATCH PIN
SEND UP BAND FREQ
3942
3943
PRI
3944
TUNE TO UP BAND
3945
RCV ON UP SYNC
SEC
C
A
B

FIG. 47

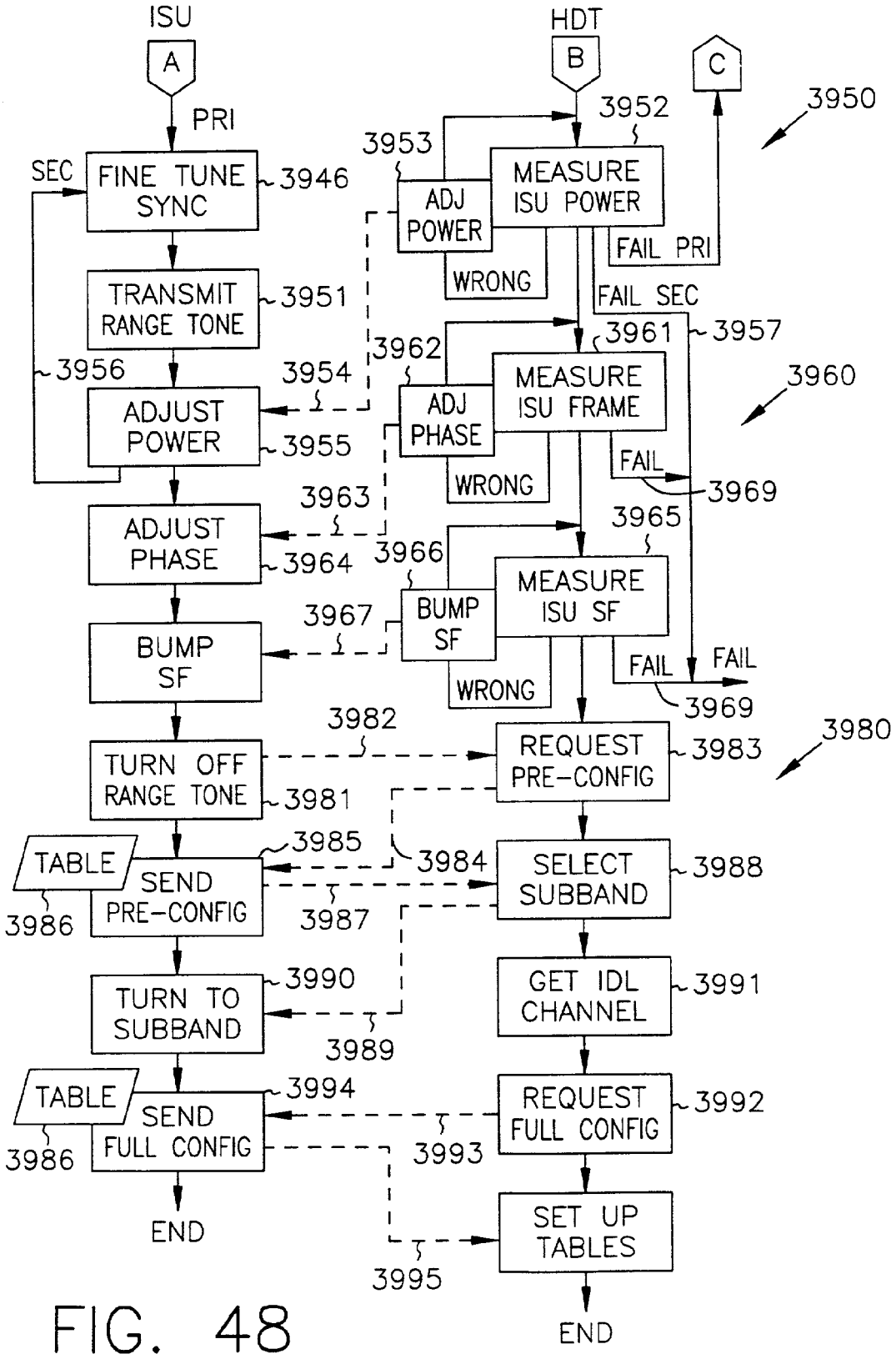
ISU
A
PRI
SEC
FINE TUNE SYNC
3946
TRANSMIT RANGE TONE
3951
3956
ADJUST POWER
3954
3955
ADJUST PHASE
3964
BUMP SF
3967
TURN OFF RANGE TONE
3981
TABLE
SEND PRE-CONFIG
3986
3985
TURN TO SUBBAND
3990
3989
TABLE
SEND FULL CONFIG
3986
3994
END
HDT
B
C
3950
3952
3953
MEASURE ISU POWER
ADJ POWER
WRONG
FAIL PRI
FAIL SEC
3961
3957
3962
MEASURE ISU FRAME
3960
ADJ PHASE
WRONG
FAIL
3969
3963
3965
3966
MEASURE ISU SF
BUMP SF
WRONG
FAIL
FAIL
3969
3982
REQUEST PRE-CONFIG
3983
3980
3984
SELECT SUBBAND
3988
3987
GET IDL CHANNEL
3991
REQUEST FULL CONFIG
3992
3993
SET UP TABLES
3995
END

FIG. 48

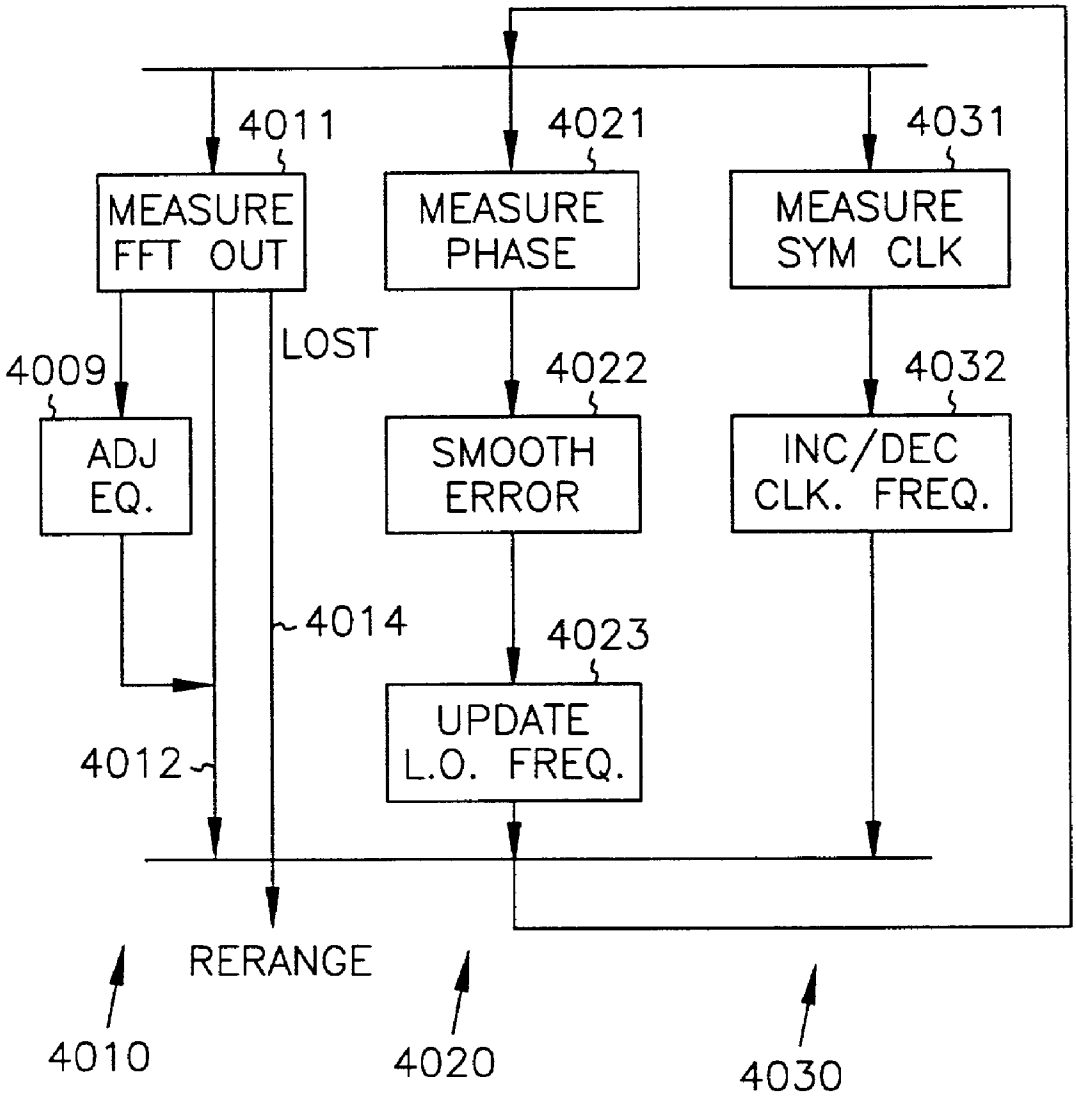
4011
4021
4031
MEASURE FFT OUT
MEASURE PHASE
MEASURE SYM CLK
LOST
4009
4022
4032
ADJ EQ.
SMOOTH ERROR
INC/DEC CLK. FREQ.
4014
4023
UPDATE L.O. FREQ.
4012
RERANGE
4010
4020
4030

FIG. 49

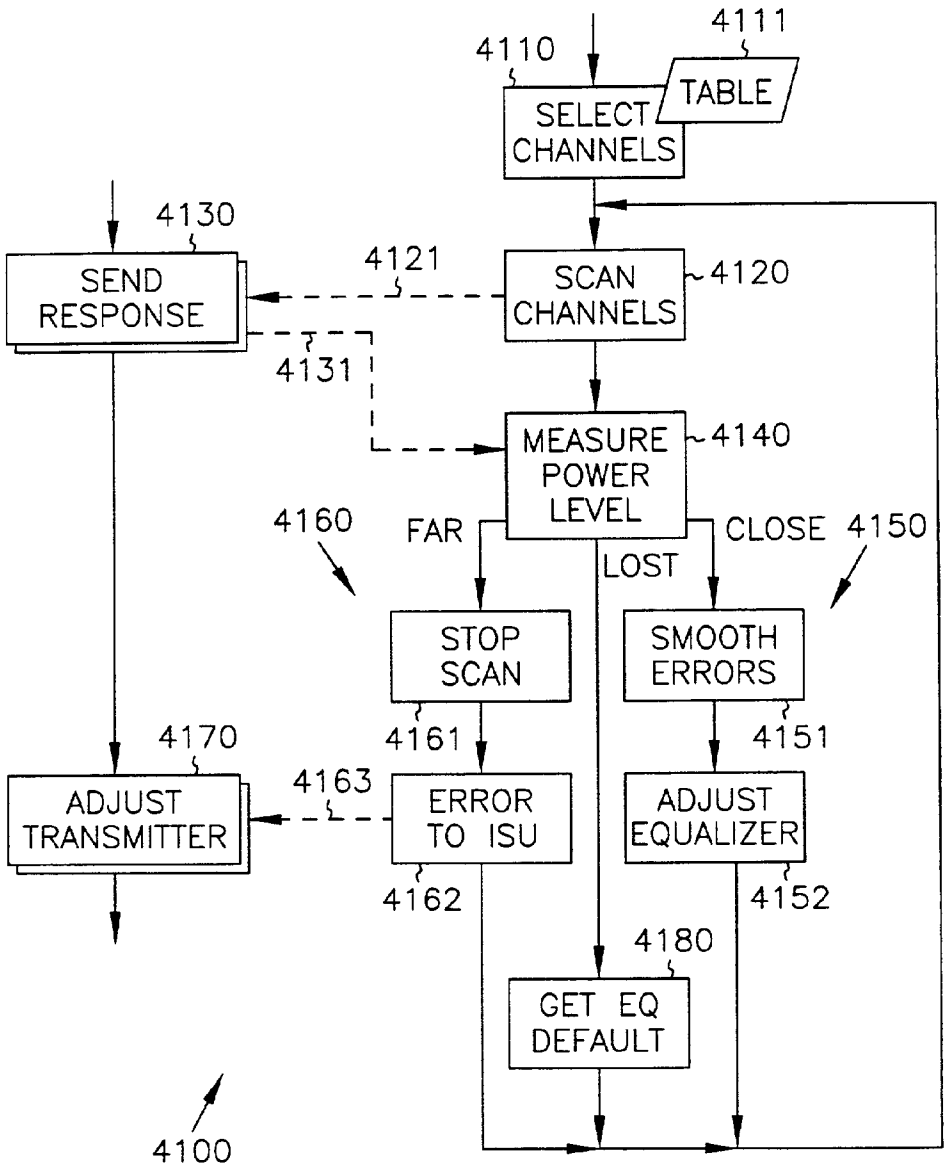
4110
4111
TABLE
SELECT CHANNELS
4130
SEND RESPONSE
4121
SCAN CHANNELS
4120
4131
MEASURE POWER LEVEL
4140
4160
FAR
LOST
CLOSE
4150
STOP SCAN
SMOOTH ERRORS
4161
4151
4170
4163
ADJUST TRANSMITTER
ERROR TO ISU
ADJUST EQUALIZER
4162
4152
4180
GET EQ DEFAULT
4100

FIG. 50

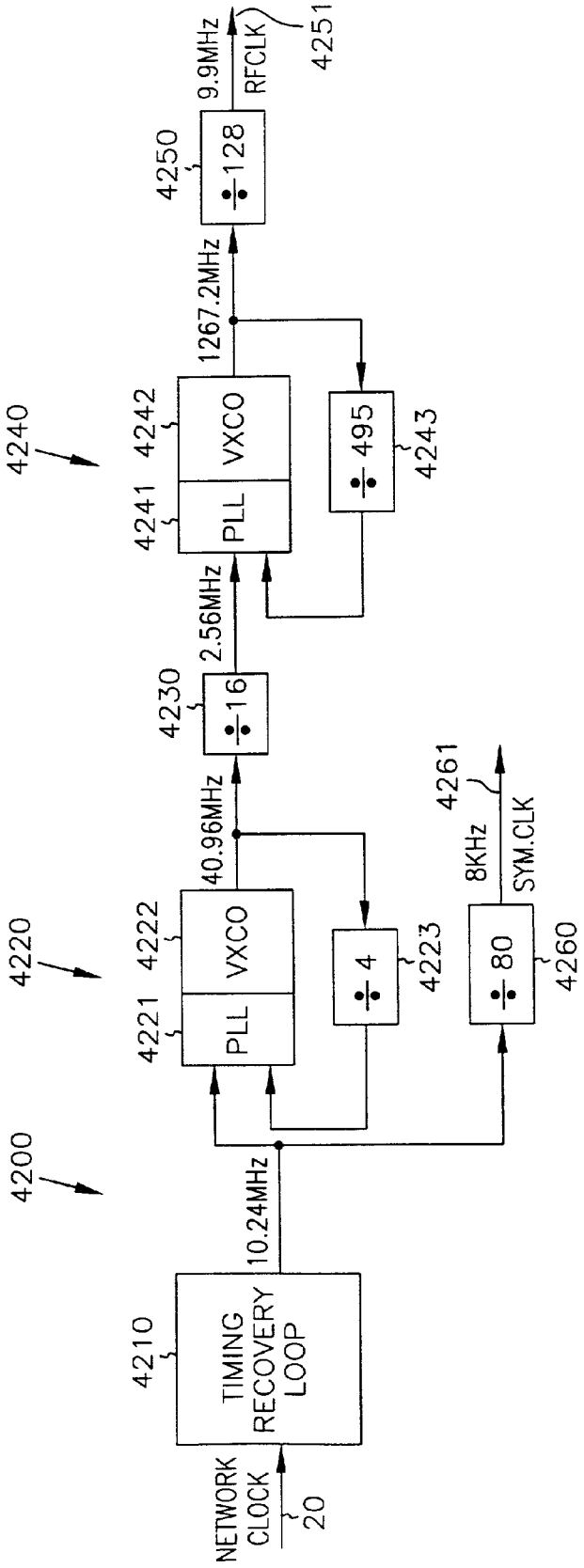
NETWORK CLOCK
20
4210
TIMING RECOVERY LOOP
10.24MHz
4200
4220
4221
PLL
4222
VXCO
40.96MHz
÷ 4
4223
÷ 80
4260
8KHz
SYM.CLK
4261
4230
÷ 16
2.56MHz
4240
4241
PLL
4242
VXCO
1267.2MHz
÷ 495
4243
4250
÷ 128
9.9MHz
RFCLK
4251

FIG. 51

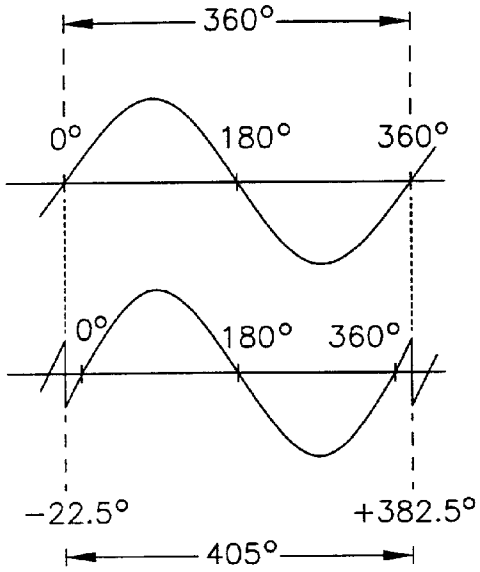
360°
0°
180°
360°
0°
180°
360°
−22.5°
+382.5°
405°

FIG. 52

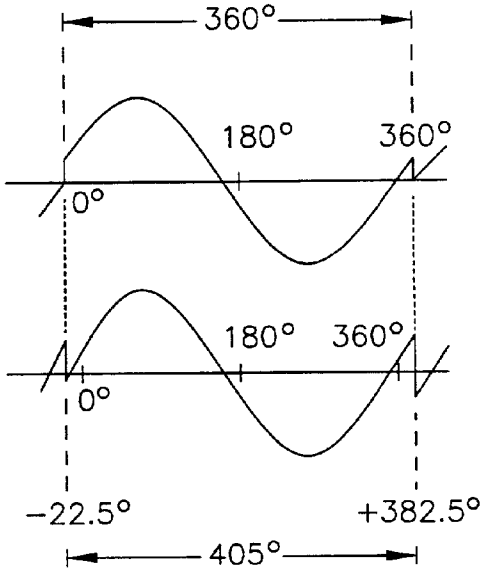
360°
180°
360°
0°
180°
360°
0°
−22.5°
+382.5°
405°

FIG. 53

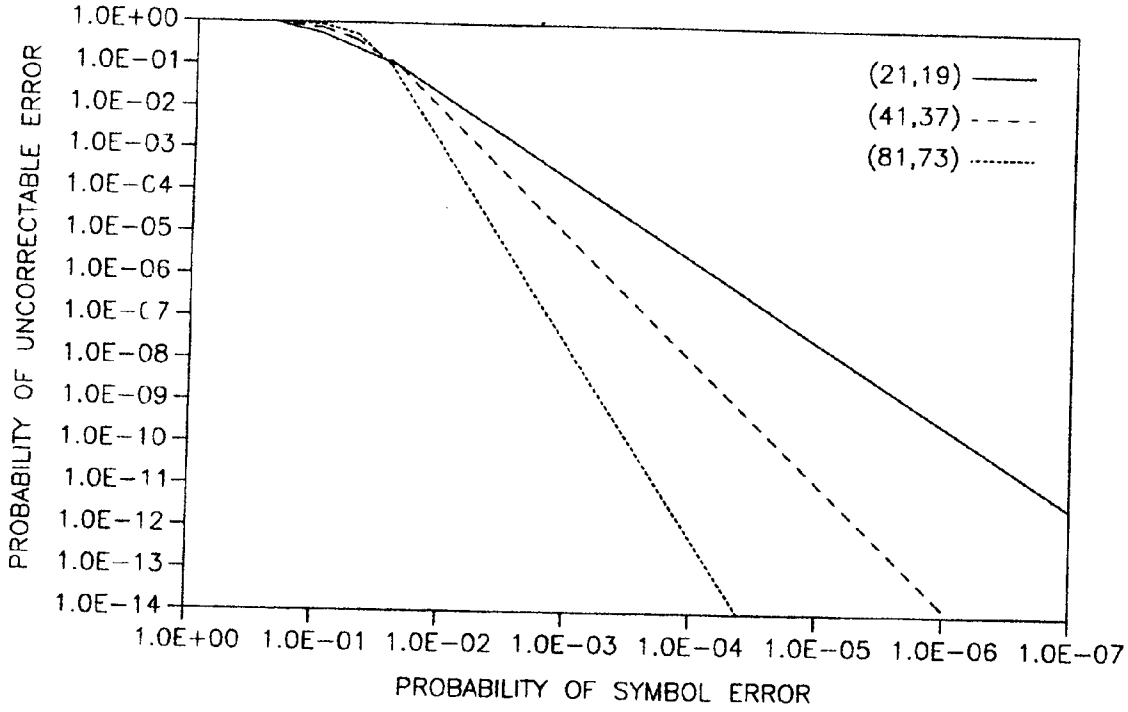
PROBABILITY OF UNCORRECTABLE ERROR
1.0E+00
1.0E-01
1.0E-02
1.0E-03
1.0E-04
1.0E-05
1.0E-06
1.0E-07
1.0E-08
1.0E-09
1.0E-10
1.0E-11
1.0E-12
1.0E-13
1.0E-14
(21,19)
(41,37)
(81,73)
1.0E+00 1.0E-01 1.0E-02 1.0E-03 1.0E-04 1.0E-05 1.0E-06 1.0E-07
PROBABILITY OF SYMBOL ERROR

FIG. 54

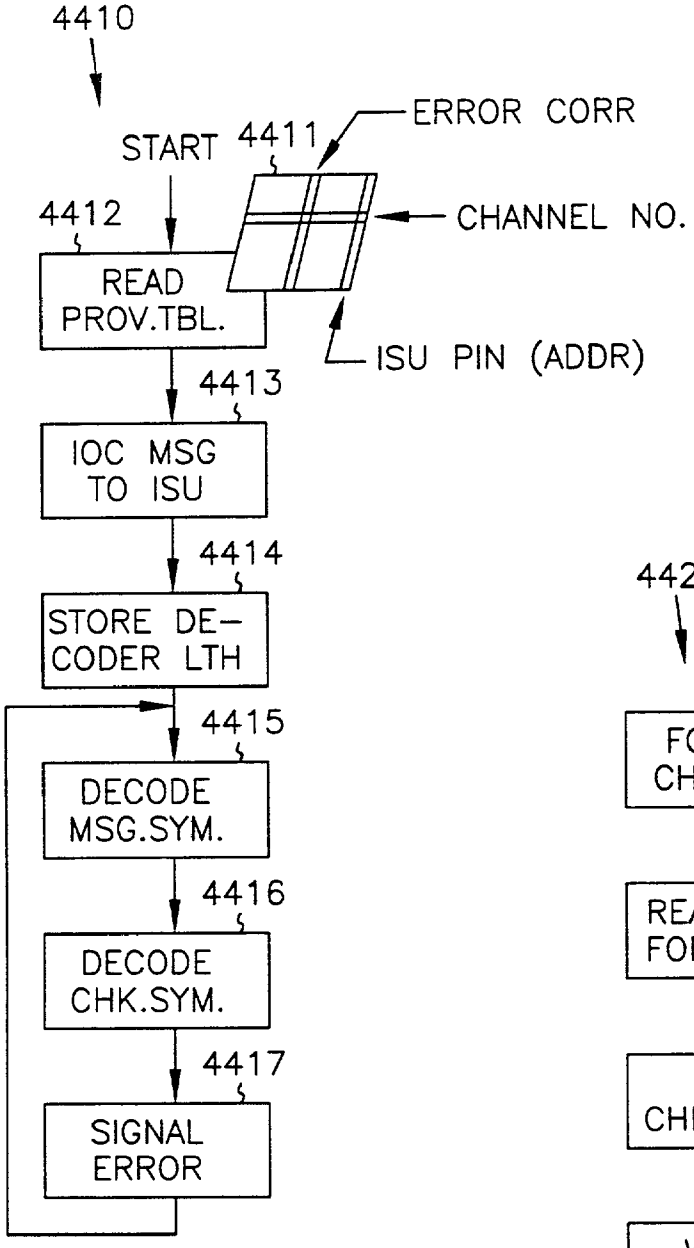
4410
START
4411
ERROR CORR
4412
CHANNEL NO.
READ PROV.TBL.
ISU PIN (ADDR)
4413
IOC MSG TO ISU
4414
STORE DE-CODER LTH
4415
DECODE MSG.SYM.
4416
DECODE CHK.SYM.
4417
SIGNAL ERROR

FIG. 55

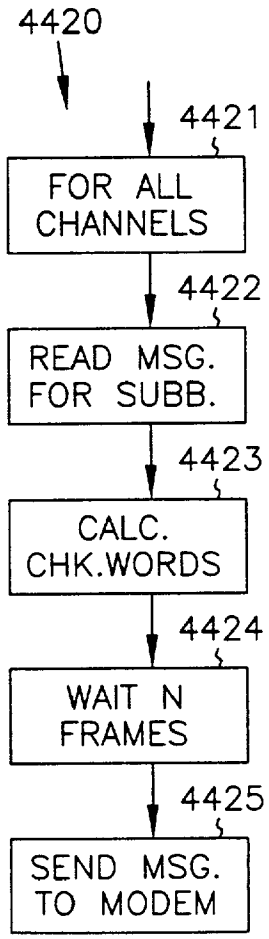
4420
4421
FOR ALL CHANNELS
4422
READ MSG. FOR SUBB.
4423
CALC. CHK.WORDS
4424
WAIT N FRAMES
4425
SEND MSG. TO MODEM

FIG. 56

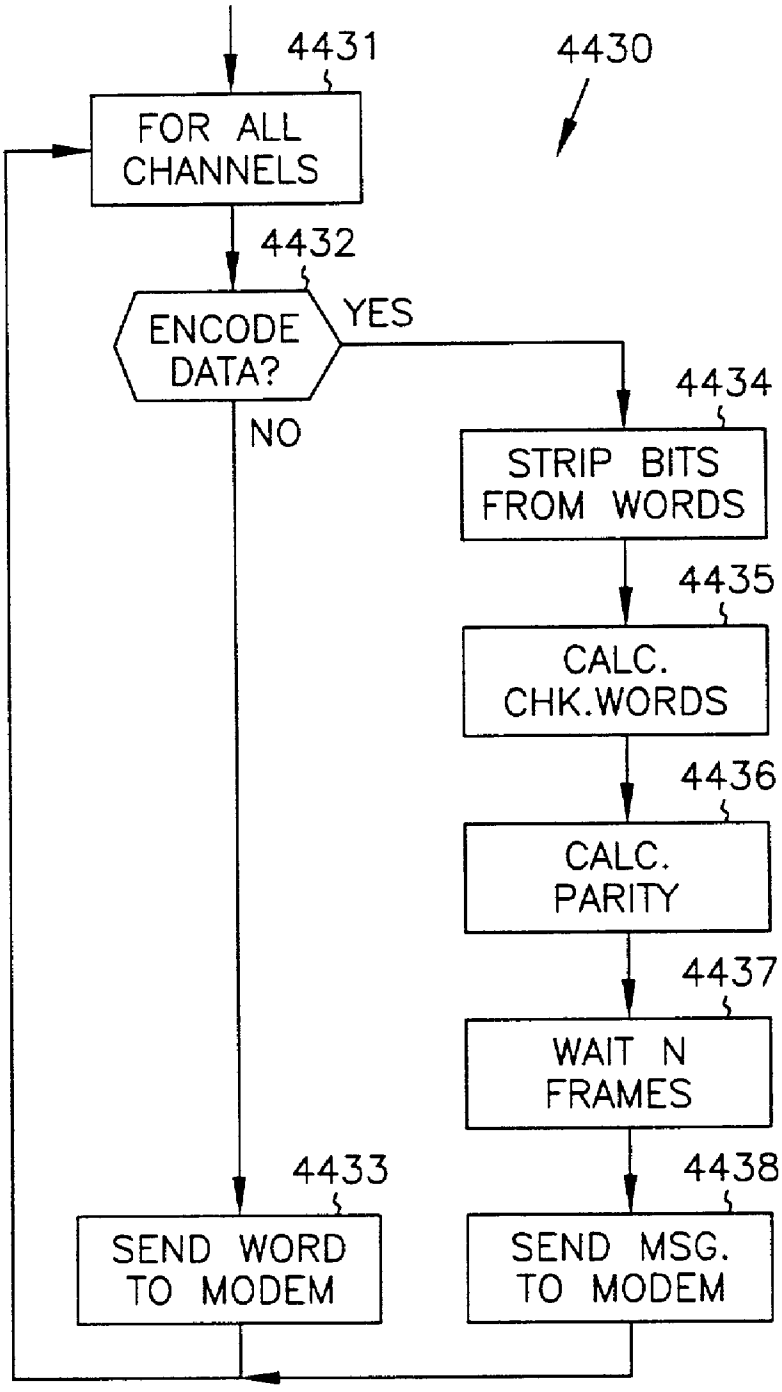
4431
4430
FOR ALL CHANNELS
4432
ENCODE DATA?
YES
NO
4434
STRIP BITS FROM WORDS
4435
CALC. CHK.WORDS
4436
CALC. PARITY
4437
WAIT N FRAMES
4433
4438
SEND WORD TO MODEM
SEND MSG. TO MODEM

FIG. 57

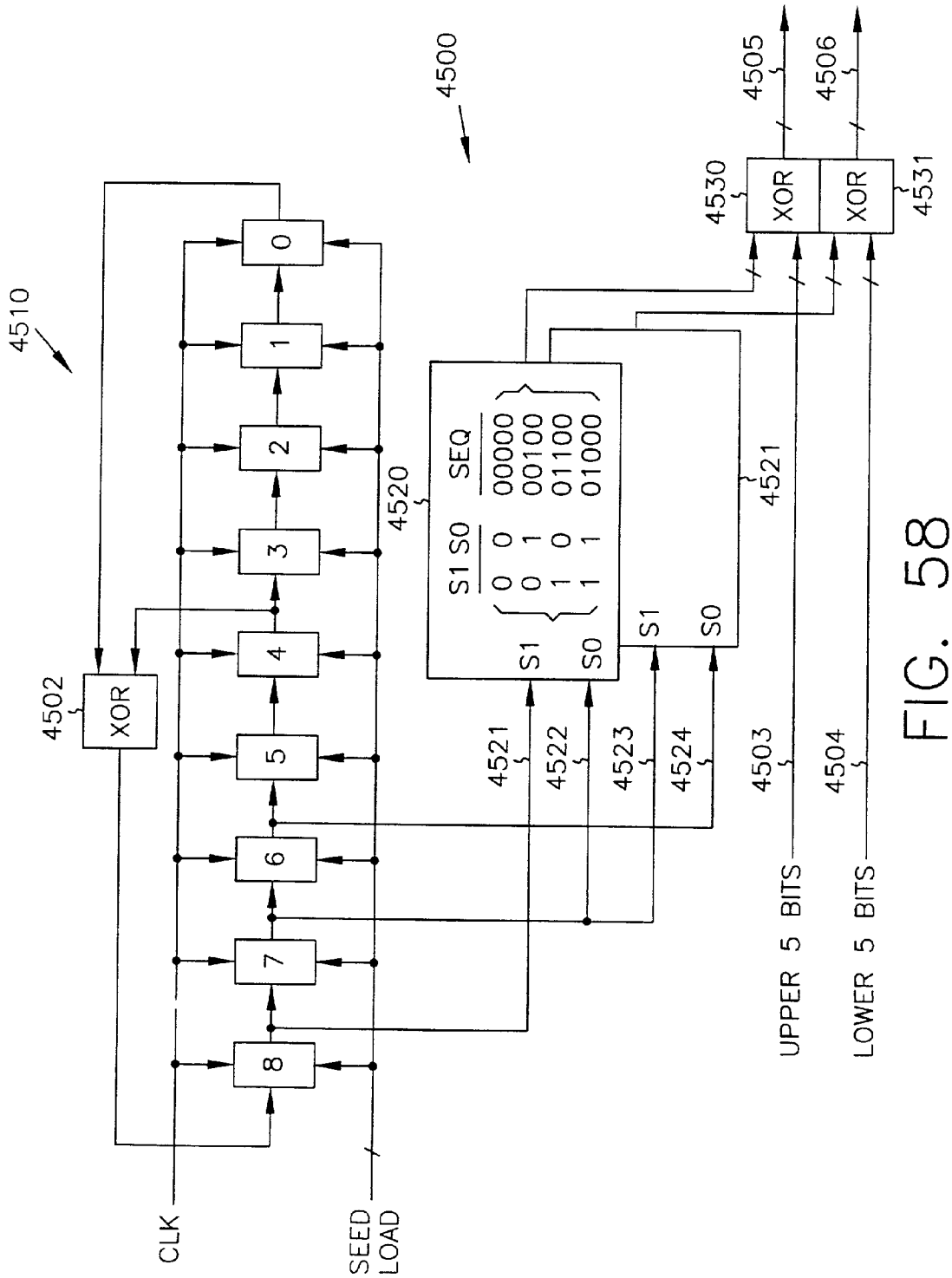
4500
4510
4502
XOR
0
1
2
3
4
5
6
7
8
4520
S1 S0 SEQ
0 0 00000
0 1 00100
1 0 01100
1 1 01000
S1
S0
4521
4522
4523
4524
4530
XOR
XOR
4531
4505
4506
4503
4504
UPPER 5 BITS
LOWER 5 BITS
CLK
SEED LOAD

FIG. 58

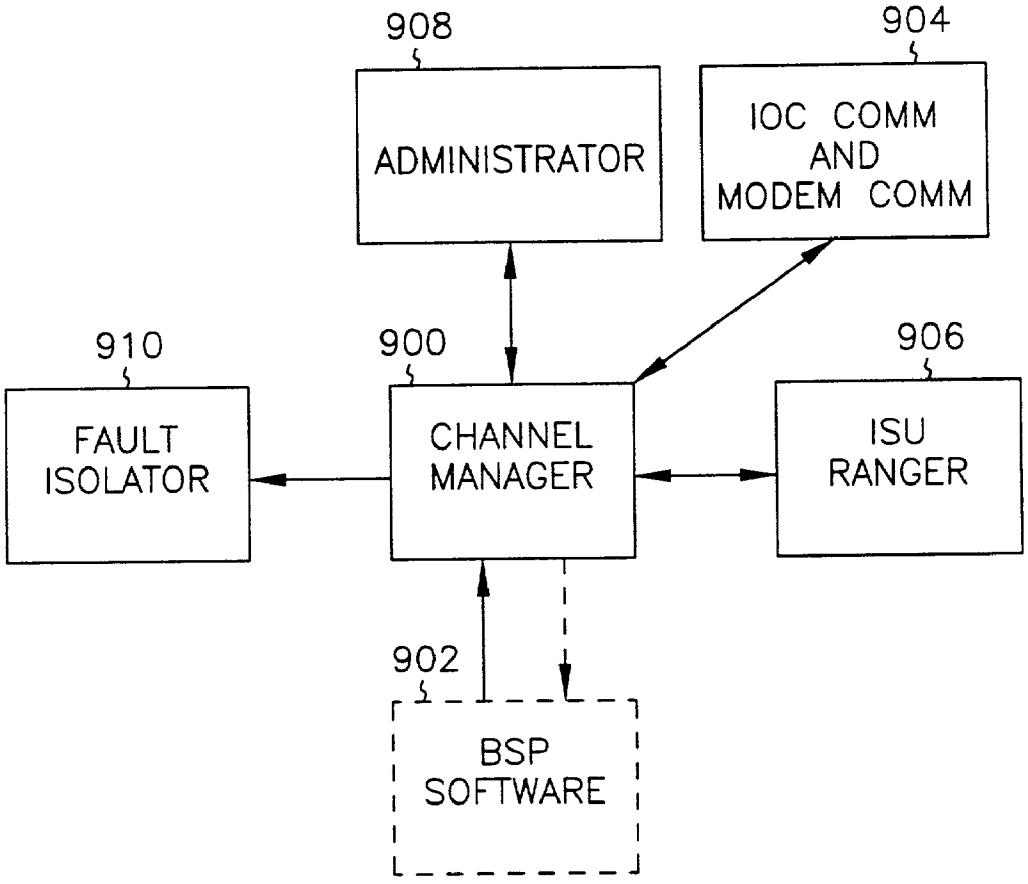
908
ADMINISTRATOR
904
IOC COMM AND MODEM COMM
910
FAULT ISOLATOR
900
CHANNEL MANAGER
906
ISU RANGER
902
BSP SOFTWARE

FIG. 59

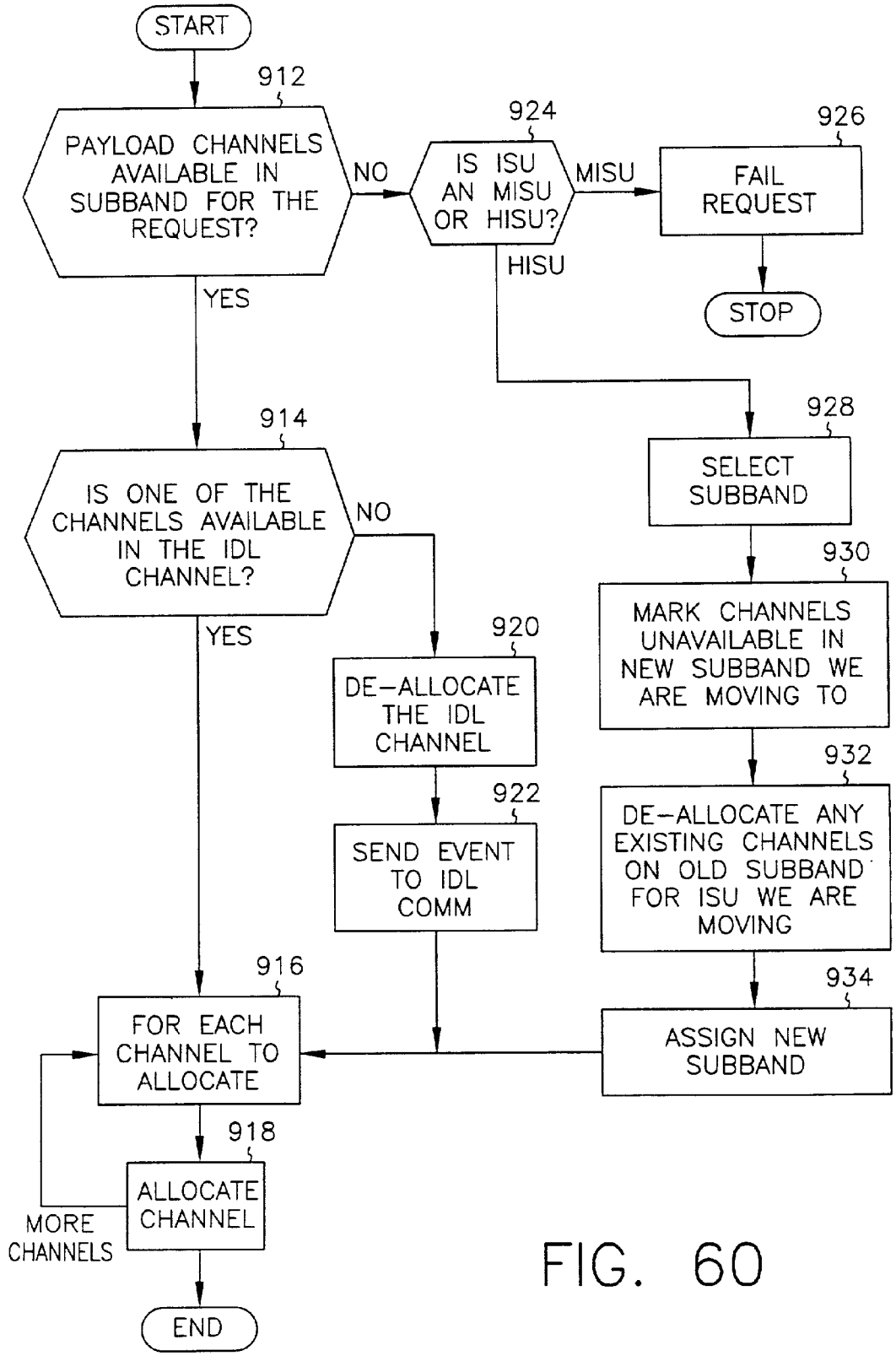
START
912
PAYLOAD CHANNELS AVAILABLE IN SUBBAND FOR THE REQUEST?
NO
924
IS ISU AN MISU OR HISU?
MISU
926
FAIL REQUEST
STOP
HISU
YES
914
IS ONE OF THE CHANNELS AVAILABLE IN THE IDL CHANNEL?
NO
YES
920
DE-ALLOCATE THE IDL CHANNEL
922
SEND EVENT TO IDL COMM
928
SELECT SUBBAND
930
MARK CHANNELS UNAVAILABLE IN NEW SUBBAND WE ARE MOVING TO
932
DE-ALLOCATE ANY EXISTING CHANNELS ON OLD SUBBAND FOR ISU WE ARE MOVING
934
ASSIGN NEW SUBBAND
916
FOR EACH CHANNEL TO ALLOCATE
918
ALLOCATE CHANNEL
MORE CHANNELS
END

FIG. 60

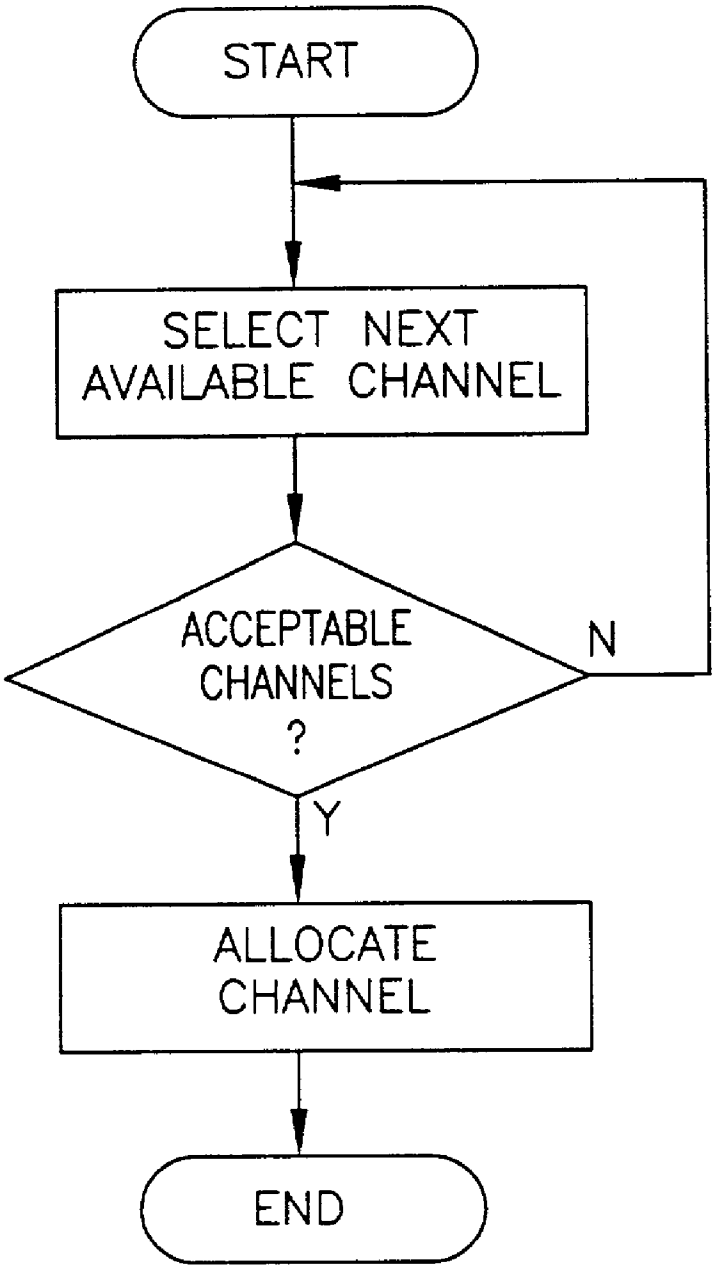
START
SELECT NEXT AVAILABLE CHANNEL
ACCEPTABLE CHANNELS ?
N
Y
ALLOCATE CHANNEL
END

FIG. 61

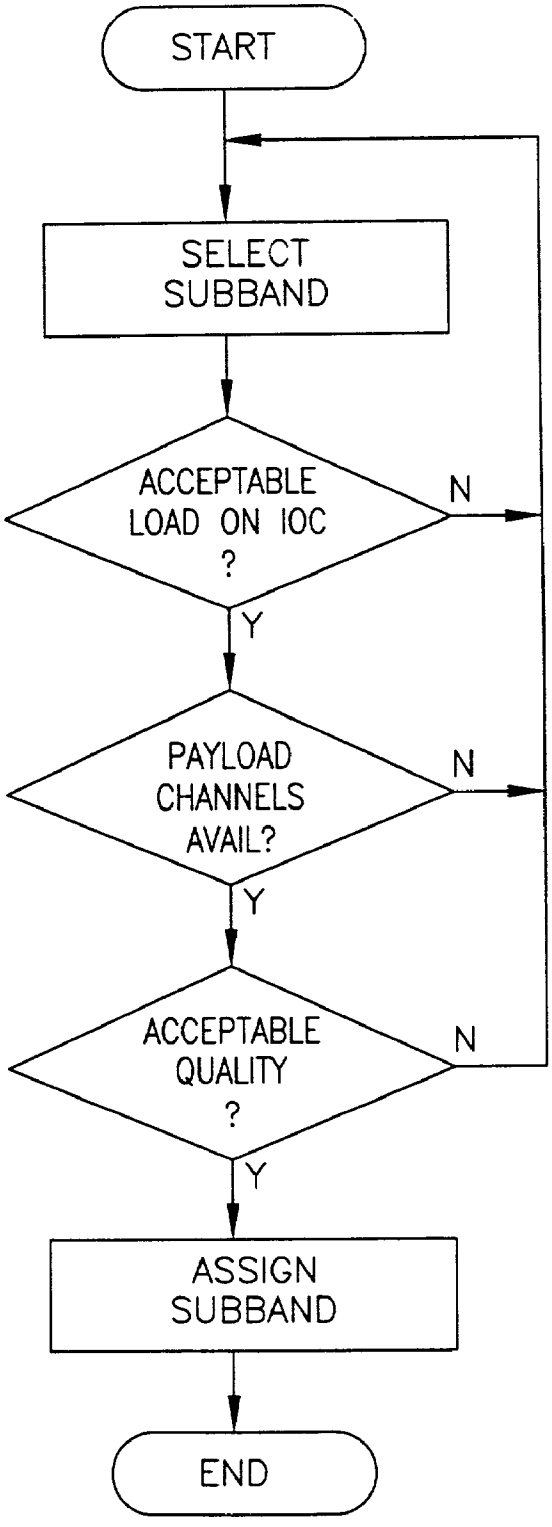
START
SELECT SUBBAND
ACCEPTABLE LOAD ON IOC ?
N
Y
PAYLOAD CHANNELS AVAIL?
N
Y
ACCEPTABLE QUALITY ?
N
Y
ASSIGN SUBBAND
END

FIG. 62

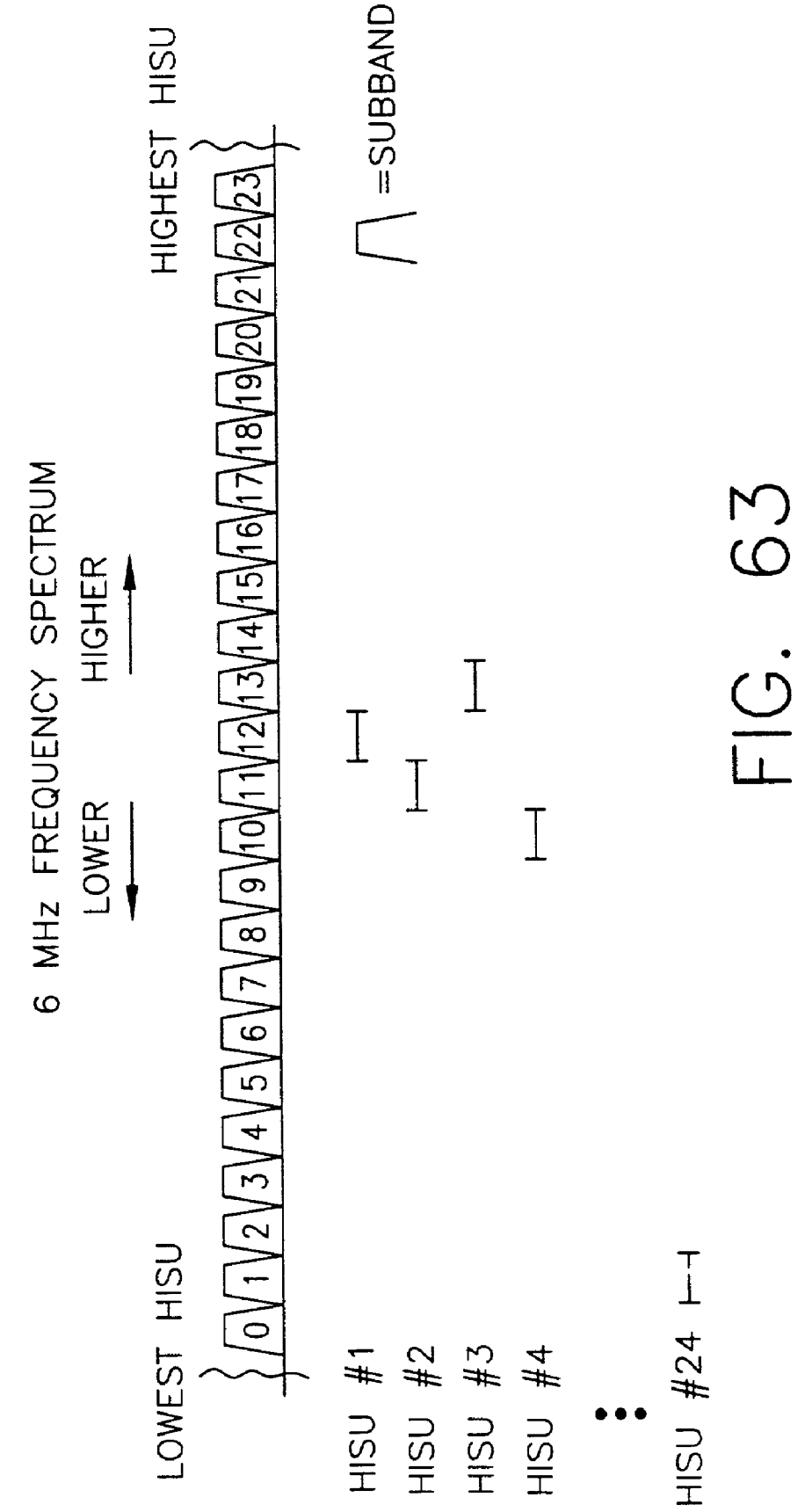
6 MHz FREQUENCY SPECTRUM
LOWER
HIGHER
LOWEST HISU
HIGHEST HISU
0
1
2
3
4
5
6
7
8
9
10
11
12
13
14
15
16
17
18
19
20
21
22
23
=SUBBAND
HISU #1
HISU #2
HISU #3
HISU #4
HISU #24

FIG. 63

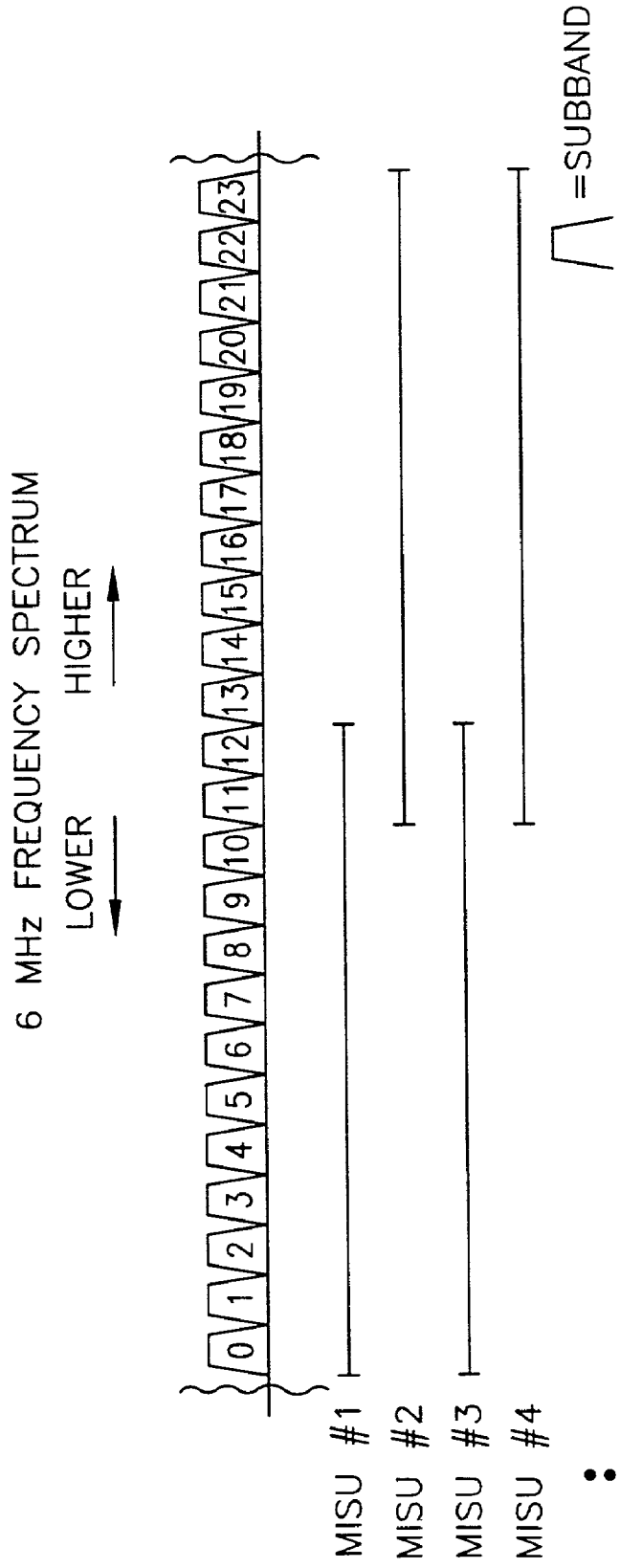
6 MHz FREQUENCY SPECTRUM
LOWER
HIGHER
0
1
2
3
4
5
6
7
8
9
10
11
12
13
14
15
16
17
18
19
20
21
22
23
=SUBBAND
MISU #1
MISU #2
MISU #3
MISU #4
...

FIG. 64

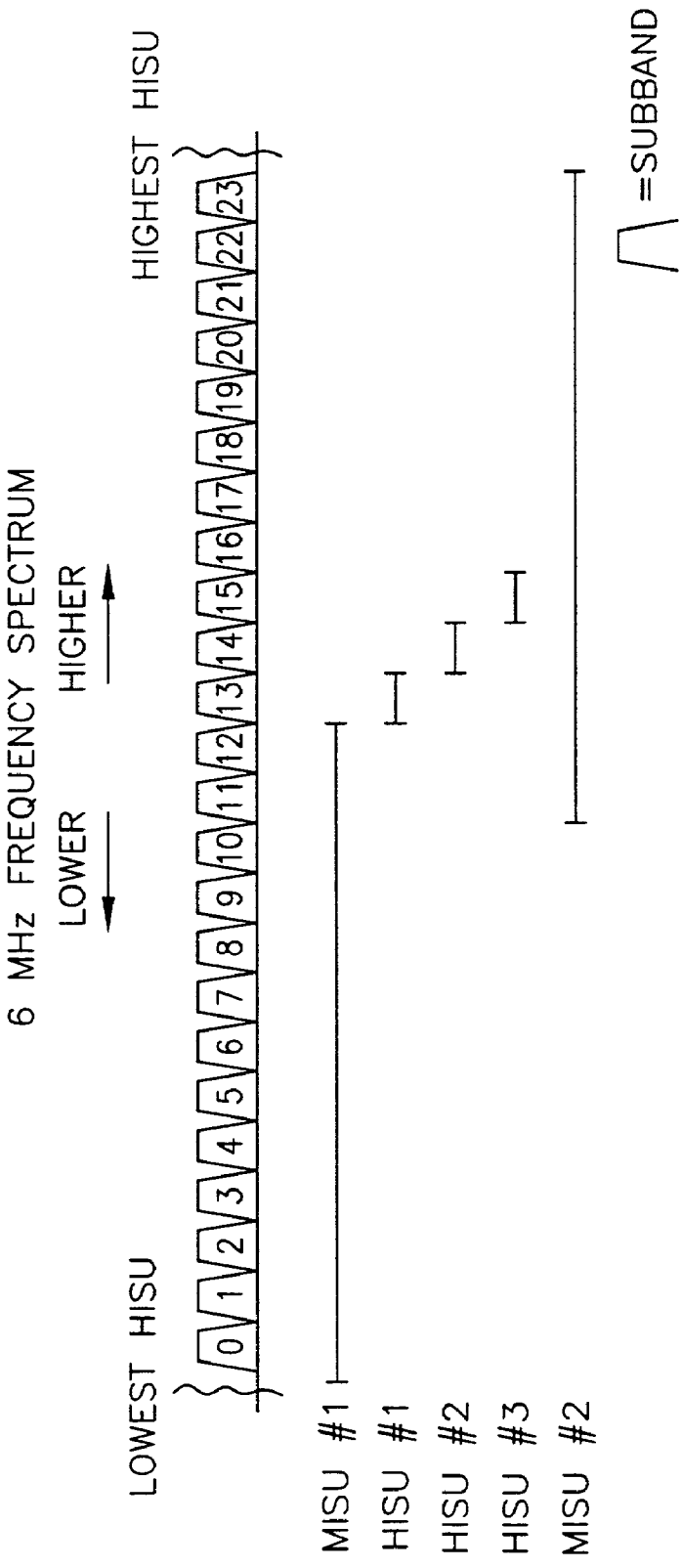
6 MHz FREQUENCY SPECTRUM
LOWER
HIGHER
LOWEST HISU
HIGHEST HISU
0
1
2
3
4
5
6
7
8
9
10
11
12
13
14
15
16
17
18
19
20
21
22
23
MISU #1
HISU #1
HISU #2
HISU #3
MISU #2
=SUBBAND

FIG. 65

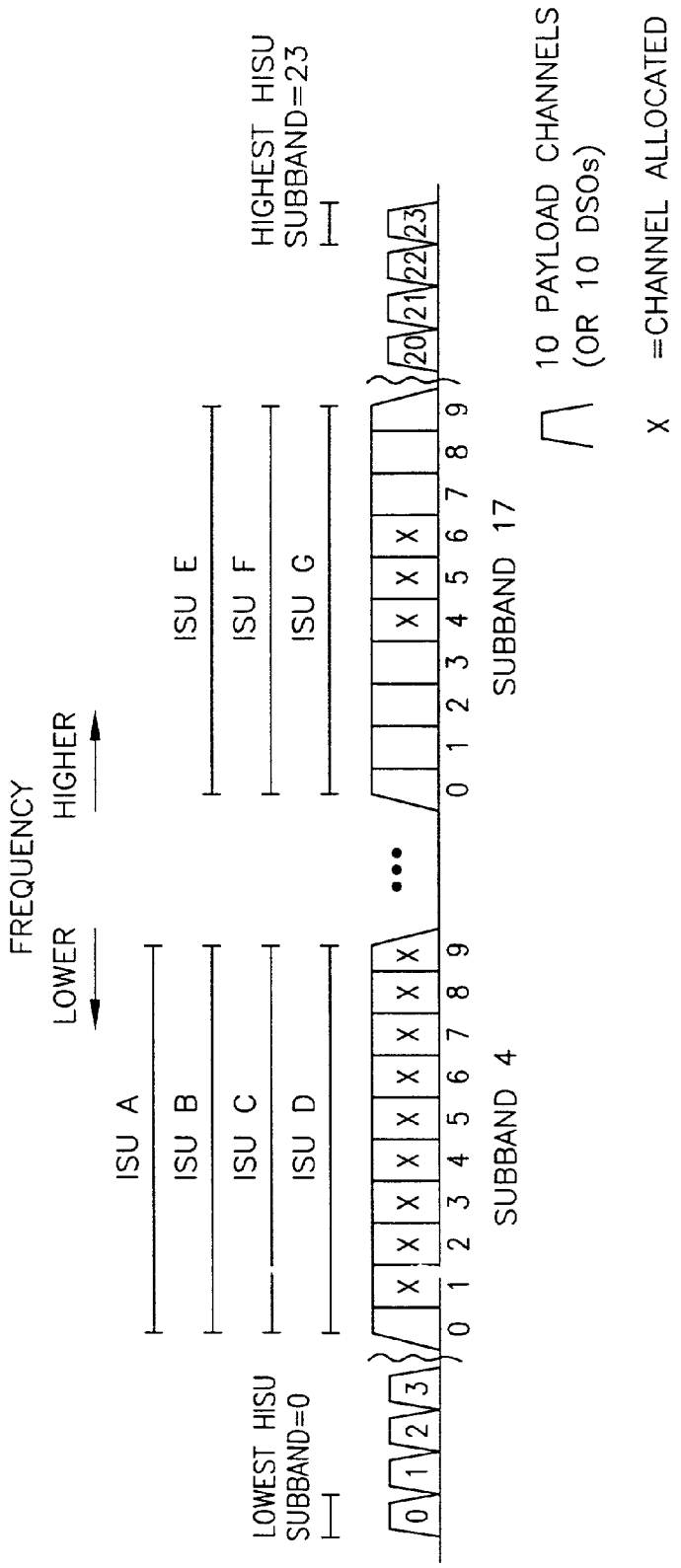
FREQUENCY
LOWER
HIGHER
ISU A
ISU B
ISU C
ISU D
ISU E
ISU F
ISU G
LOWEST HISU
SUBBAND=0
HIGHEST HISU
SUBBAND=23
0 1 2 3
X X X X X X X X X X
0 1 2 3 4 5 6 7 8 9
SUBBAND 4
X X X
0 1 2 3 4 5 6 7 8 9
SUBBAND 17
20 21 22 23
10 PAYLOAD CHANNELS
(OR 10 DSOs)
X =CHANNEL ALLOCATED

FIG. 66

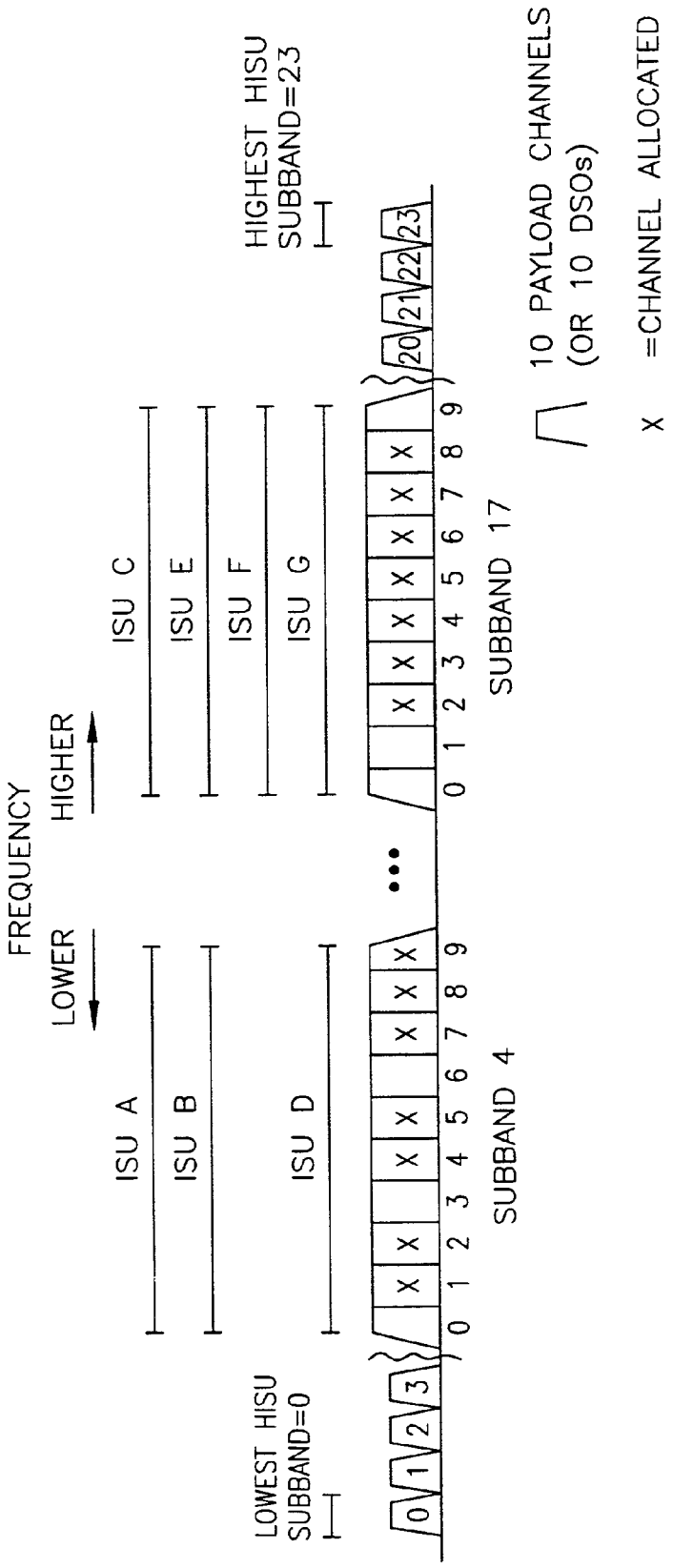
FREQUENCY
LOWER
HIGHER
ISU A
ISU B
ISU C
ISU D
ISU E
ISU F
ISU G
LOWEST HISU SUBBAND=0
HIGHEST HISU SUBBAND=23
SUBBAND 4
SUBBAND 17
0 1 2 3 4 5 6 7 8 9
0 1 2 3
20 21 22 23
10 PAYLOAD CHANNELS (OR 10 DSOs)
X =CHANNEL ALLOCATED

FIG. 67

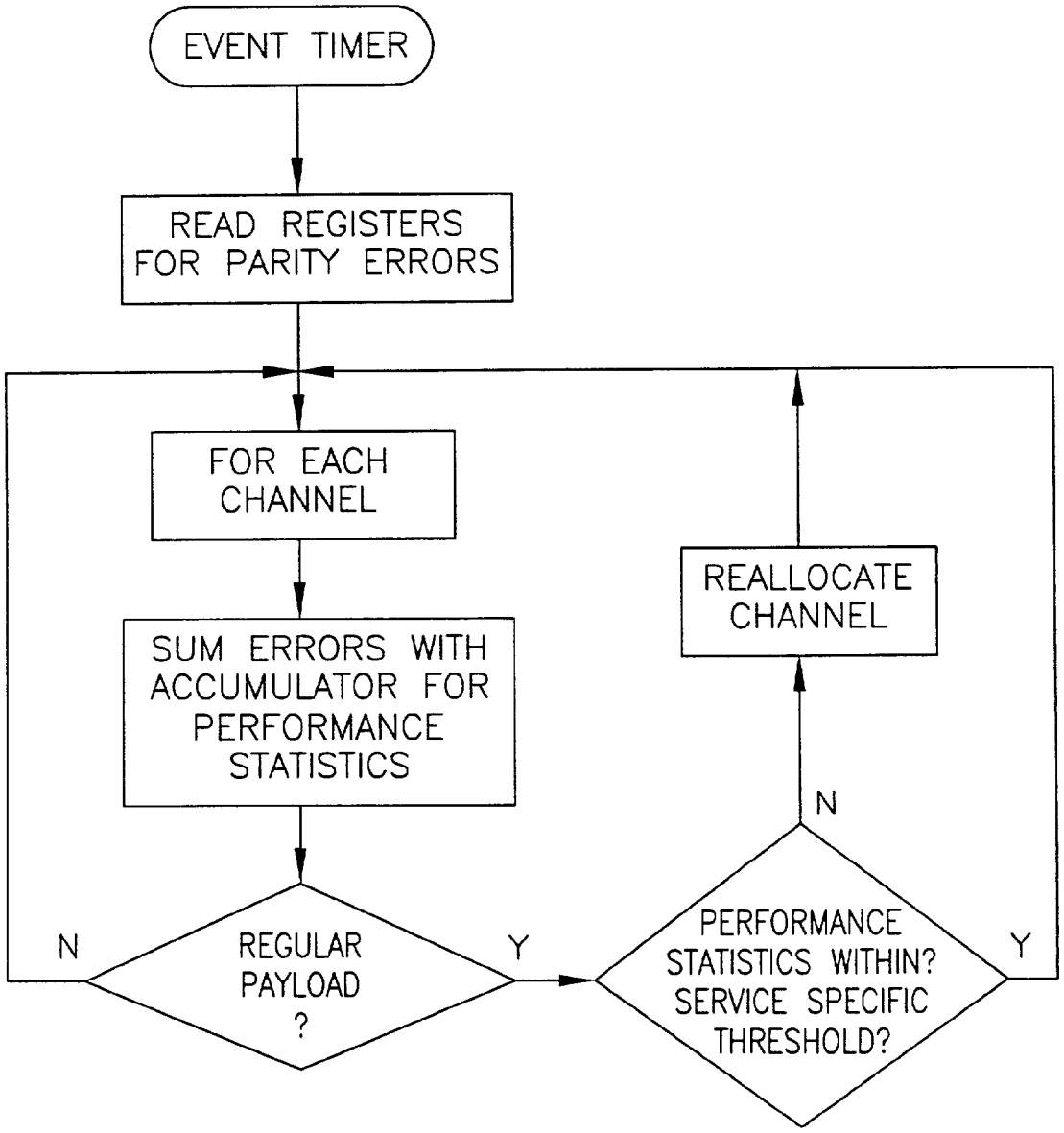
EVENT TIMER
READ REGISTERS FOR PARITY ERRORS
FOR EACH CHANNEL
SUM ERRORS WITH ACCUMULATOR FOR PERFORMANCE STATISTICS
REGULAR PAYLOAD ?
N
Y
PERFORMANCE STATISTICS WITHIN? SERVICE SPECIFIC THRESHOLD?
N
Y
REALLOCATE CHANNEL

FIG. 68

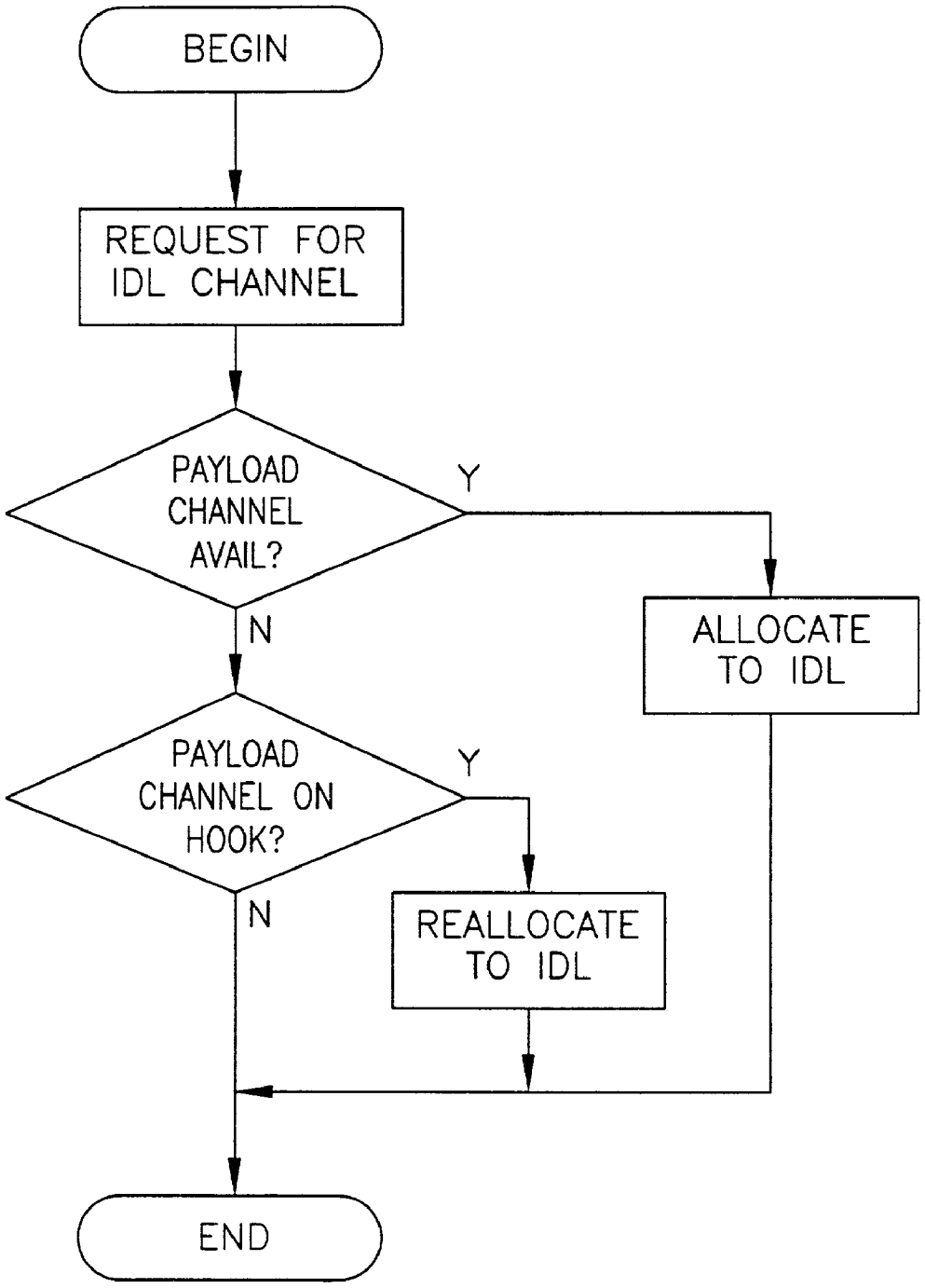
BEGIN
REQUEST FOR IDL CHANNEL
PAYLOAD CHANNEL AVAIL?
Y
N
ALLOCATE TO IDL
PAYLOAD CHANNEL ON HOOK?
Y
N
REALLOCATE TO IDL
END

FIG. 69

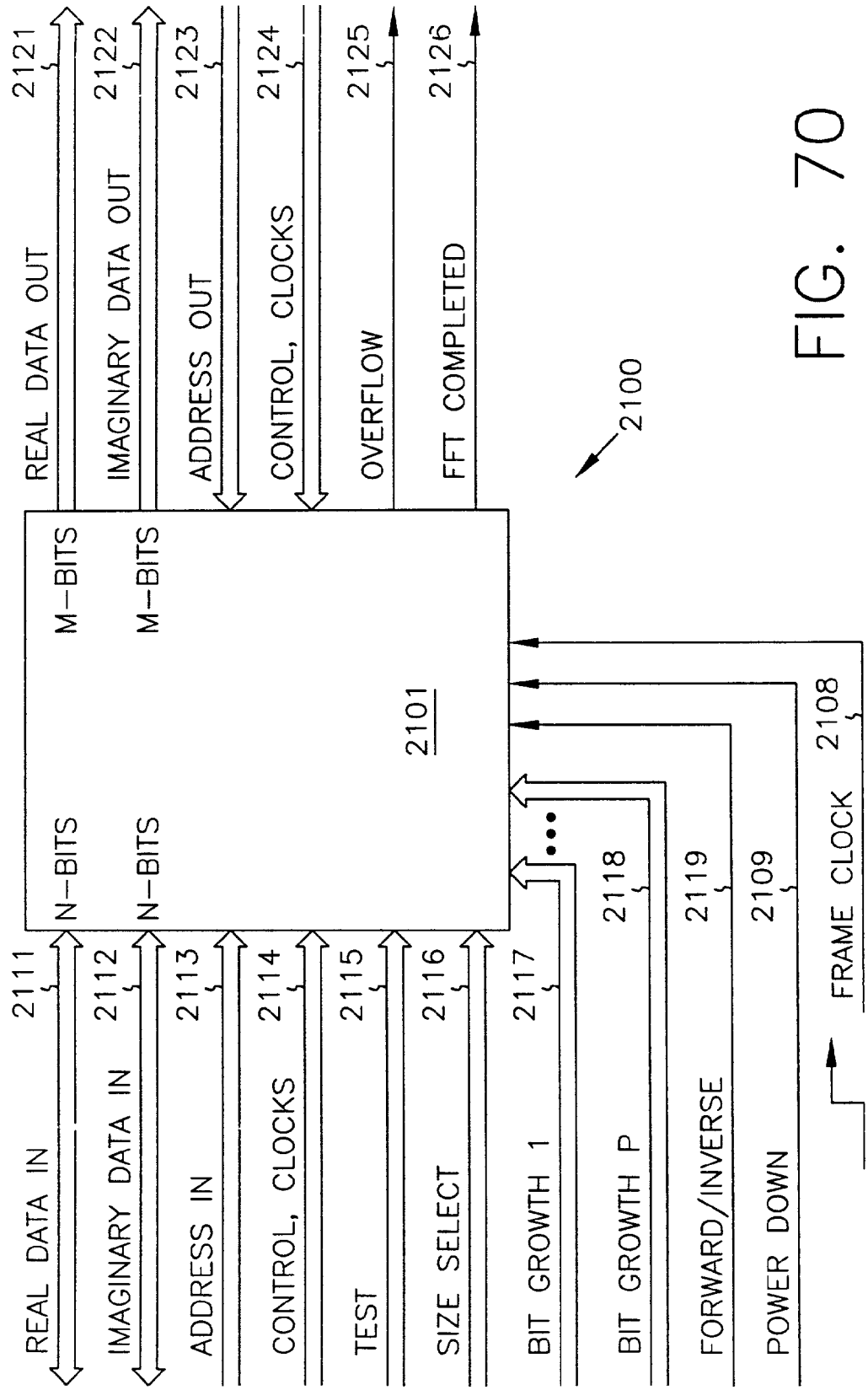
REAL DATA IN
2111
N-BITS
IMAGINARY DATA IN
2112
N-BITS
ADDRESS IN
2113
CONTROL, CLOCKS
2114
TEST
2115
SIZE SELECT
2116
BIT GROWTH 1
2117
BIT GROWTH P
2118
FORWARD/INVERSE
2119
POWER DOWN
2109
FRAME CLOCK
2108
2101
2100
REAL DATA OUT
2121
M-BITS
IMAGINARY DATA OUT
2122
M-BITS
ADDRESS OUT
2123
CONTROL, CLOCKS
2124
OVERFLOW
2125
FFT COMPLETED
2126

FIG. 70

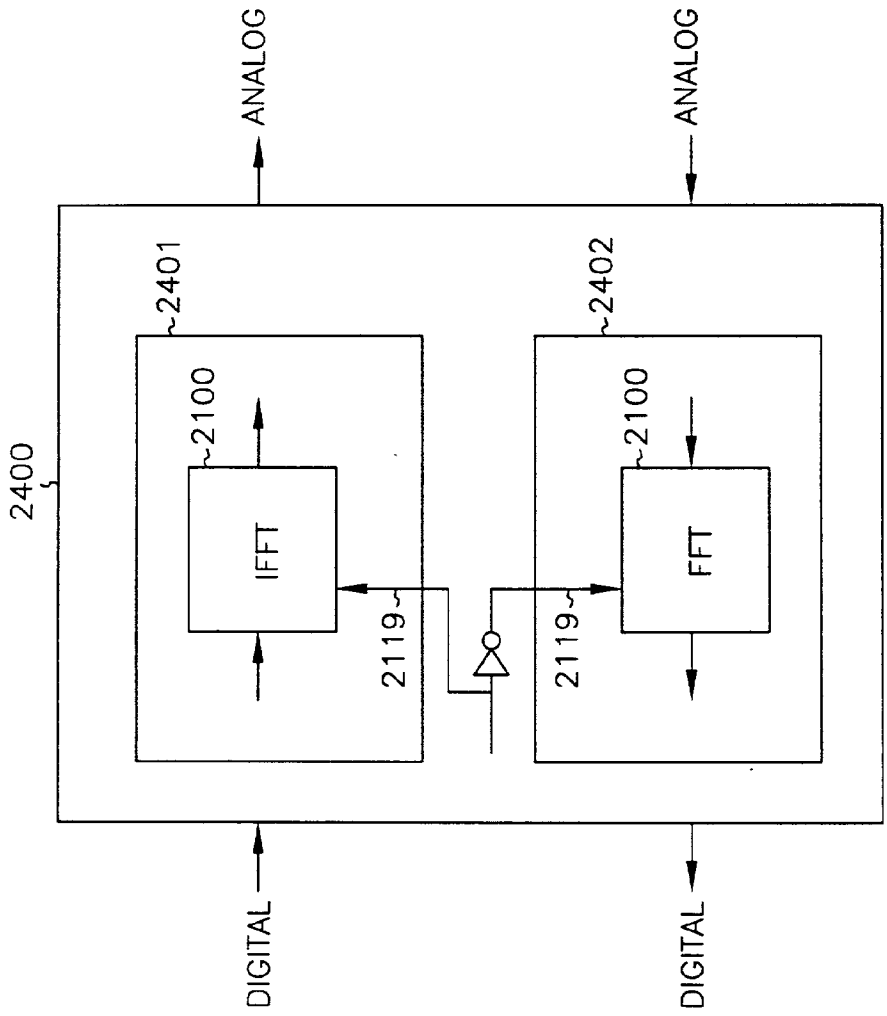
ANALOG
ANALOG
2401
2402
2100
2100
2400
IFFT
FFT
2119
2119
DIGITAL
DIGITAL

FIG. 71

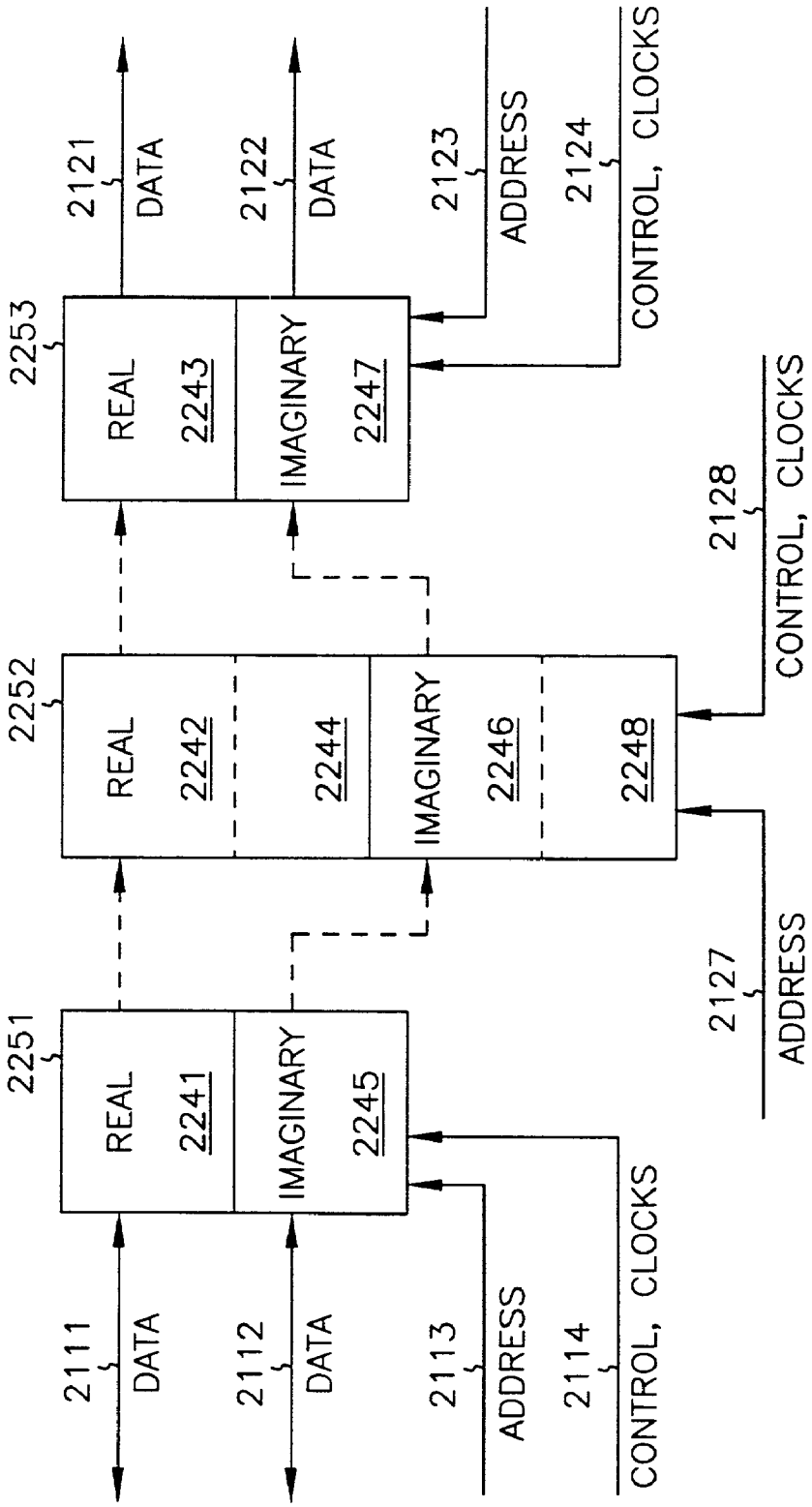
2111
DATA
2112
DATA
2113
ADDRESS
2114
CONTROL, CLOCKS
2251
REAL
2241
IMAGINARY
2245
2252
REAL
2242
2244
IMAGINARY
2246
2248
2253
REAL
2243
IMAGINARY
2247
2121
DATA
2122
DATA
2123
ADDRESS
2124
CONTROL, CLOCKS
2127
ADDRESS
2128
CONTROL, CLOCKS

FIG. 72

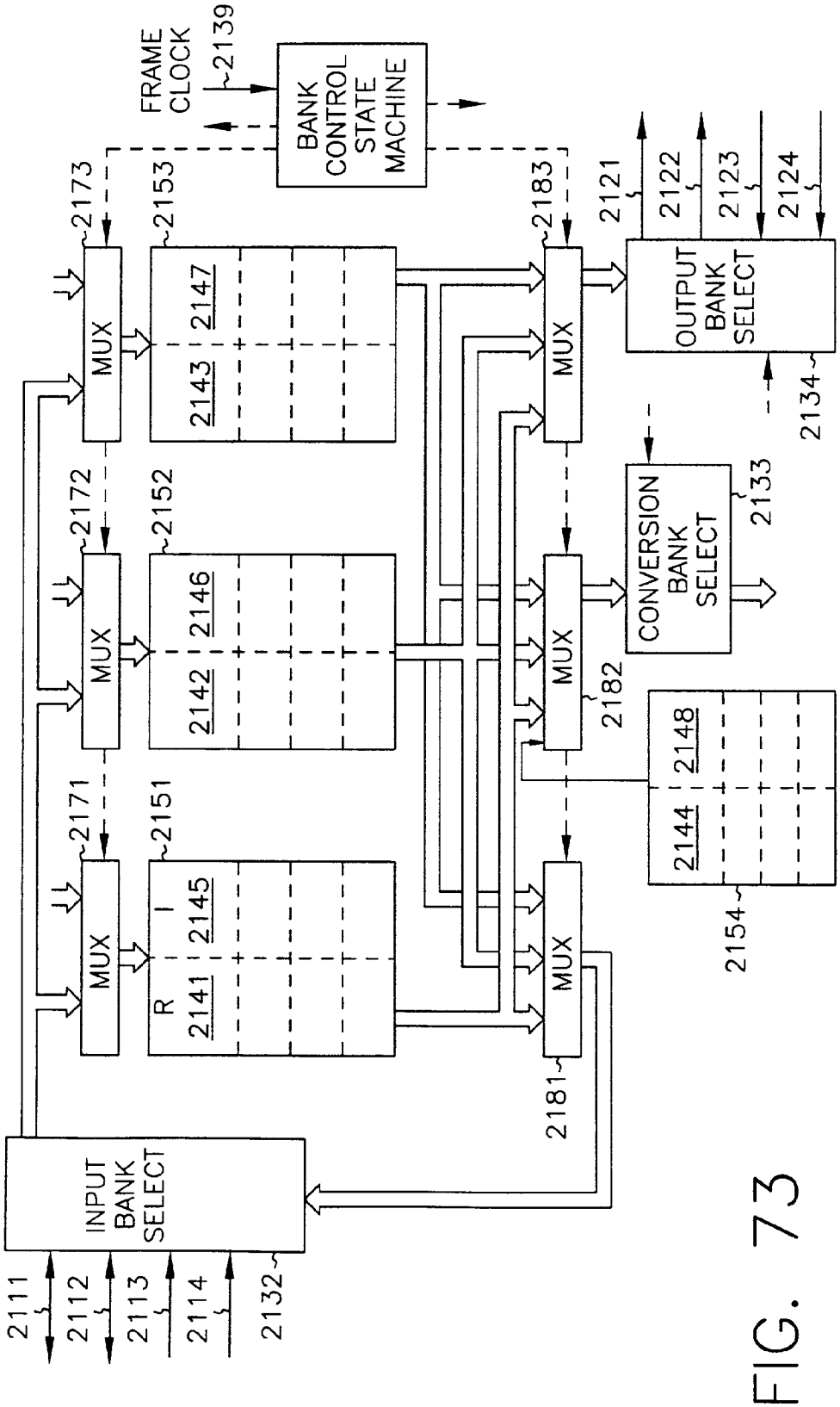
FRAME CLOCK
2139
BANK CONTROL STATE MACHINE
2173
2153
2183
2121
2122
2123
2124
MUX
2143
2147
OUTPUT BANK SELECT
2134
2172
2152
2146
2142
CONVERSION BANK SELECT
2133
2182
2171
2151
2145
2141
2148
2144
2154
2181
INPUT BANK SELECT
2111
2112
2113
2114
2132

FIG. 73

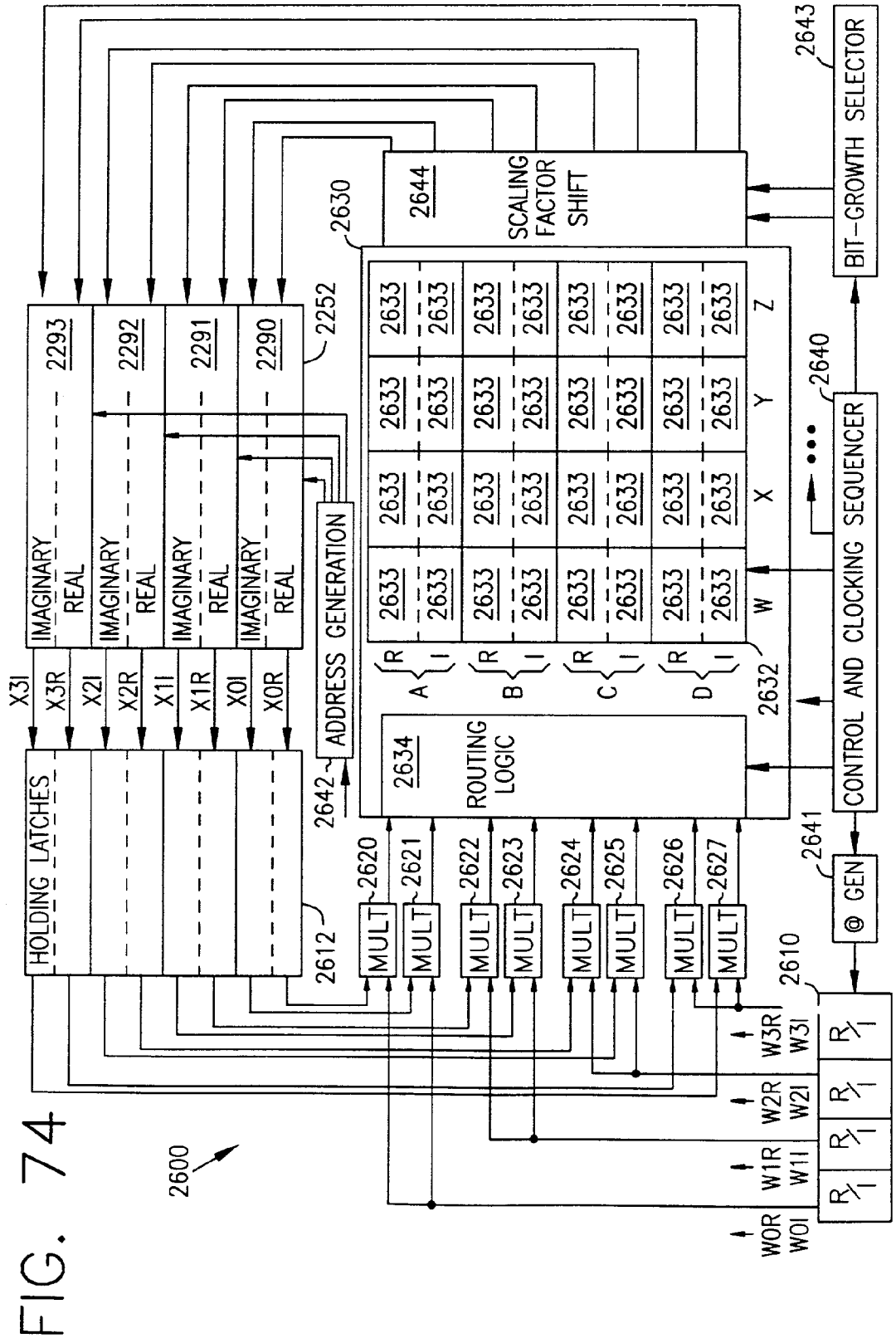
2600
2610
2612
2620
2621
2622
2623
2624
2625
2626
2627
MULT
2630
2632
2633
2634
2640
2641
2642
2643
2644
2252
2290
2291
2292
2293
IMAGINARY
REAL
HOLDING LATCHES
ADDRESS GENERATION
ROUTING LOGIC
SCALING FACTOR SHIFT
BIT-GROWTH SELECTOR
CONTROL AND CLOCKING SEQUENCER
@ GEN
X3I
X3R
X2I
X2R
X1I
X1R
X0I
X0R
W3R
W3I
W2R
W2I
W1R
W1I
W0R
W0I
A
B
C
D
W
X
Y
Z
R
I

FIG. 74

THIS TABLE SHOWS THE ORDER OF CALCULATION FOR A TRANSPOSED BUTTERFLY:

CO

AWR=WR AWI =WI	AXR =XR AXI =XI	AYR =YR AYI =YI	AZR =ZR AZI =ZI
BWR=WR BWI =WI	BXR=XR BXI =XI	BYR =YR BYI =YI	BZR=ZR BZI =ZI
CWR=WR CWI =WI	CXR=XR CXI =XI	CYR =YR CYI =YI	CZR=ZR CZI =ZI
DWR=WR DWI =WI	DXR=XR DXI =XI	DYR =YR DYI =YI	DZR=ZR DZI =ZI

~2632

2800

FIG. 75

CI

AWR=AWR −WI AWI=AWI +WR	AXR=AXR −XI AXI=AXI +XR	AYR=AYR −YI AYI=AYI +YR	AZR=AZR −ZI AZI=AZI +ZR
BWR=BWR−WI BWI=BWI +WR	BXR=BXR −XI BXI=BXI +XR	BYR=BYR −YI BYI=BYI +YR	BZR=BZR −ZI BZI=BZI +ZR
CWR=CWR−WI CWI=CWI +WR	CXR=CXR −XI CXI=CXI +XR	CYR=CYR −YI CYI=CYI +YR	CZR=CZR −ZI CZI=CZI +ZR
DWR=DWR−WI DWI=DWI +WR	DXR=DXR −XI DXI=DXI +XR	DYR=DYR −YI DYI=DYI +YR	DZR=DZR −ZI DZI=DZI +ZR

~2632

2800

FIG. 76

C2

2800

2632

AWR=AWR +WR AWI=AWI +WI	AXR=AXR +XI AXI=AXI −XR	AYR=AYR −YR AYI=AYI −YI	AZR=AZR −ZI AZI=AZI +ZR
BWR=BWR+WR BWI=BWI +WI	BXR=BXR +XI BXI=BXI −XR	BYR=BYR −YR BYI=BYI −YI	BZR=BZR −ZI BZI=BZI +ZR
CWR=CWR+WR CWI=CWI +WI	CXR=CXR +XI CXI=CXI −XR	CYR=CYR −YR CYI=CYI −YI	CZR=CZR −ZI CZI=CZI +ZR
DWR=DWR+WR DWI=DWI +WI	DXR=DXR +XI DXI=DXI −XR	DYR=DYR −YR DYI=DYI −YI	DZR=DZR −ZI DZI=DZI +ZR

FIG. 77

C3

2800

2632

AWR=AWR −WI AWI=AWI +WR	AXR=AXR +XR AXI=AXI +XI	AYR=AYR +YI AYI=AYI −YR	AZR=AZR −ZR AZI=AZI −ZI
BWR=BWR−WI BWI=BWI +WR	BXR=BXR +XR BXI=BXI +XI	BYR=BYR +YI BYI=BYI −YR	BZR=BZR −ZR BZI=BZI −ZI
CWR=CWR−WI CWI=CWI +WR	CXR=CXR +XR CXI=CXI +XI	CYR=CYR +YI CYI=CYI −YR	CZR=CZR −ZR CZI=CZI −ZI
DWR=DWR−WI DWI=DWI +WR	DXR=DXR +XR DXI=DXI +XI	DYR=DYR +YI DYI=DYI −YR	DZR=DZR −ZR DZI=DZI −ZI

FIG. 78

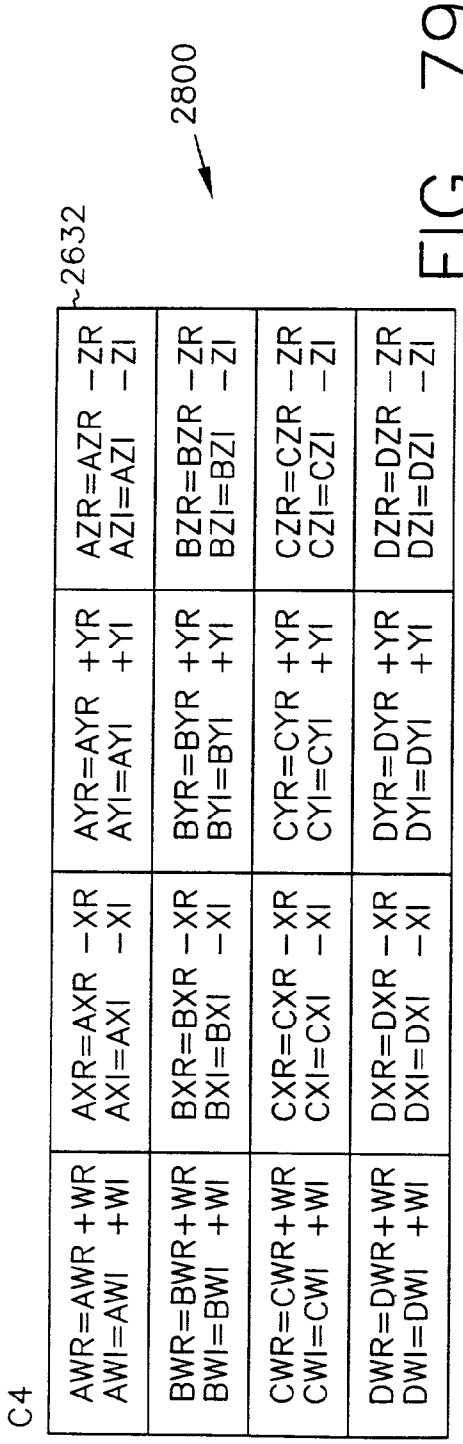
C4
2632
2800
AWR=AWR +WR
AWI=AWI +WI
AXR=AXR −XR
AXI=AXI −XI
AYR=AYR +YR
AYI=AYI +YI
AZR=AZR −ZR
AZI=AZI −ZI
BWR=BWR+WR
BWI=BWI +WI
BXR=BXR −XR
BXI=BXI −XI
BYR=BYR +YR
BYI=BYI +YI
BZR=BZR −ZR
BZI=BZI −ZI
CWR=CWR+WR
CWI=CWI +WI
CXR=CXR −XR
CXI=CXI −XI
CYR=CYR +YR
CYI=CYI +YI
CZR=CZR −ZR
CZI=CZI −ZI
DWR=DWR+WR
DWI=DWI +WI
DXR=DXR −XR
DXI=DXI −XI
DYR=DYR +YR
DYI=DYI +YI
DZR=DZR −ZR
DZI=DZI −ZI

FIG. 79

C5
2632
2800
AWR=AWR −WI
AWI=AWI +WR
AXR=AXR +XI
AXI=AXI −XR
AYR=AYR −YI
AYI=AYI +YR
AZR=AZR +ZI
AZI=AZI −ZR
BWR=BWR−WI
BWI=BWI +WR
BXR=BXR +XI
BXI=BXI −XR
BYR=BYR −YI
BYI=BYI +YR
BZR=BZR +ZI
BZI=BZI −ZR
CWR=CWR−WI
CWI=CWI +WR
CXR=CXR +XI
CXI=CXI −XR
CYR=CYR −YI
CYI=CYI +YR
CZR=CZR +ZI
CZI=CZI −ZR
DWR=DWR−WI
DWI=DWI +WR
DXR=DXR +XI
DXI=DXI −XR
DYR=DYR −YI
DYI=DYI +YR
DZR=DZR +ZI
DZI=DZI −ZR

FIG. 80

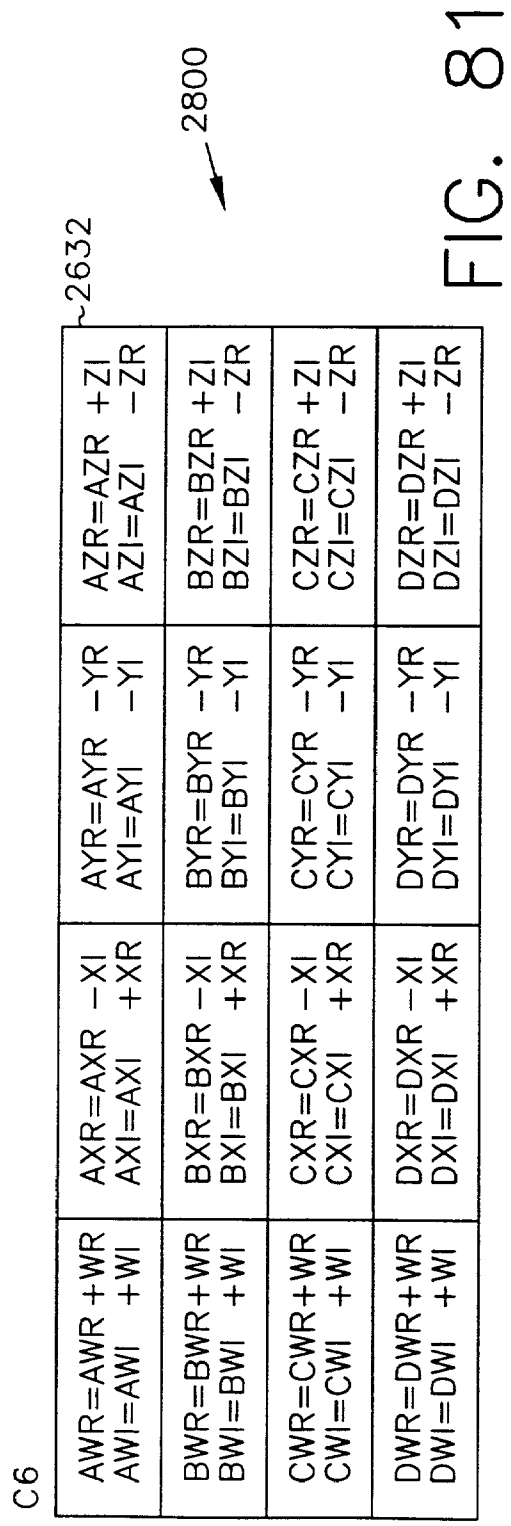
C6
2632
2800
AWR=AWR +WR
AWI=AWI +WI
AXR=AXR −XI
AXI=AXI +XR
AYR=AYR −YR
AYI=AYI −YI
AZR=AZR +ZI
AZI=AZI −ZR
BWR=BWR+WR
BWI=BWI +WI
BXR=BXR −XI
BXI=BXI +XR
BYR=BYR −YR
BYI=BYI −YI
BZR=BZR +ZI
BZI=BZI −ZR
CWR=CWR+WR
CWI=CWI +WI
CXR=CXR −XI
CXI=CXI +XR
CYR=CYR −YR
CYI=CYI −YI
CZR=CZR +ZI
CZI=CZI −ZR
DWR=DWR+WR
DWI=DWI +WI
DXR=DXR −XI
DXI=DXI +XR
DYR=DYR −YR
DYI=DYI −YI
DZR=DZR +ZI
DZI=DZI −ZR

FIG. 81

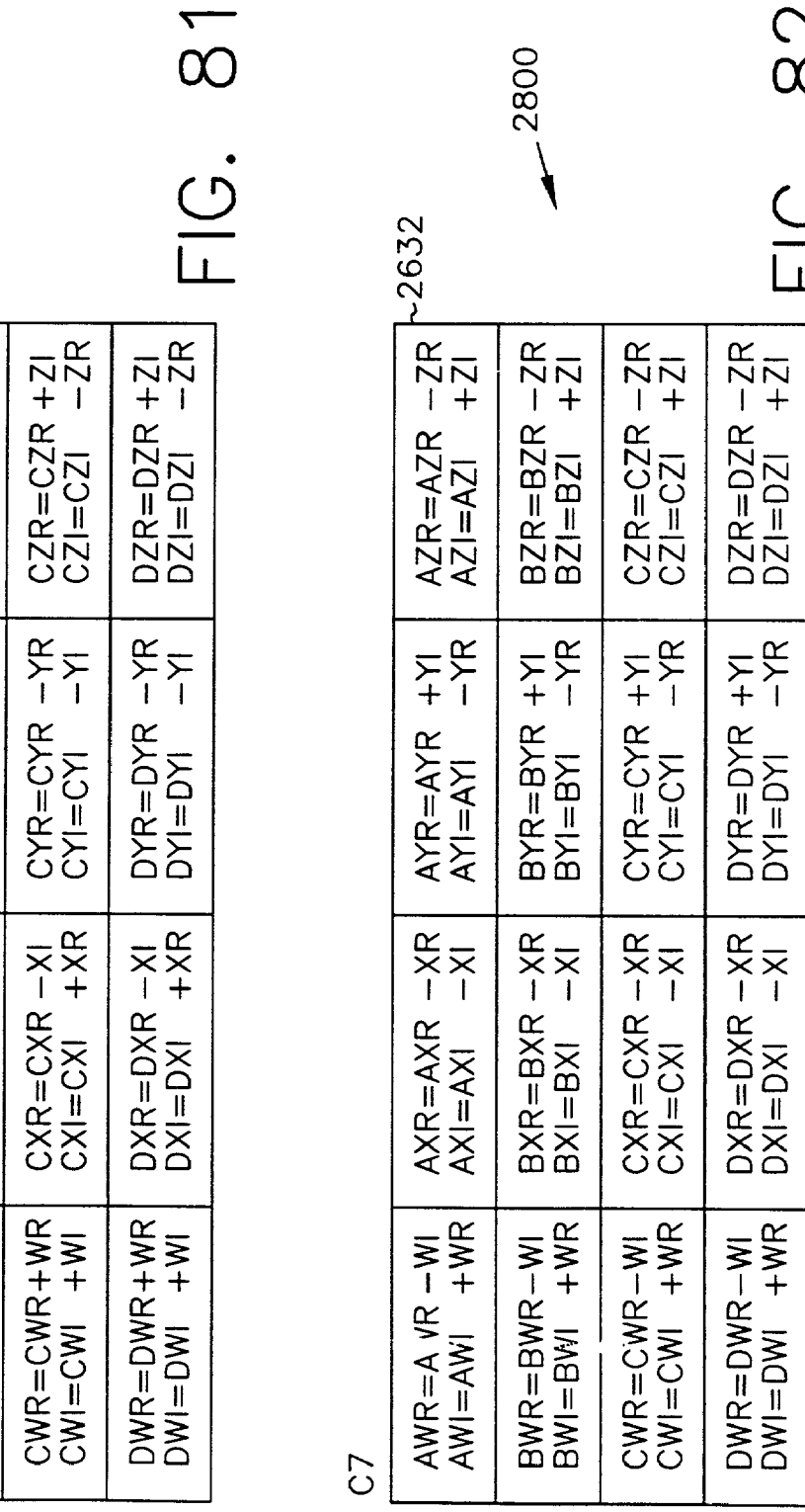
C7
2632
2800
AWR=A VR −WI
AWI=AWI +WR
AXR=AXR −XR
AXI=AXI −XI
AYR=AYR +YI
AYI=AYI −YR
AZR=AZR −ZR
AZI=AZI +ZI
BWR=BWR−WI
BWI=BWI +WR
BXR=BXR −XR
BXI=BXI −XI
BYR=BYR +YI
BYI=BYI −YR
BZR=BZR −ZR
BZI=BZI +ZI
CWR=CWR−WI
CWI=CWI +WR
CXR=CXR −XR
CXI=CXI −XI
CYR=CYR +YI
CYI=CYI −YR
CZR=CZR −ZR
CZI=CZI +ZI
DWR=DWR−WI
DWI=DWI +WR
DXR=DXR −XR
DXI=DXI −XI
DYR=DYR +YI
DYI=DYI −YR
DZR=DZR −ZR
DZI=DZI +ZI

FIG. 82

THIS TABLE SHOWS THE ORDER OF CALCULATION FOR A TRANSPOSED BUTTERFLY:

C0

2632

AWR =WR+XR+YR+ZR AWI =WI+XI+YI+ZI	AXR =WR−XI−YR+ZI AXI =WI+XR−YI−ZR	AYR =WR−XR+YR−ZR AYI =WI−XI+YI−ZI	AZR =WR+XI−YR−ZI AZI =WI−XR−YI+ZR
– –	– –	– –	– –
– –	– –	– –	– –
– –	– –	– –	– –

2810

FIG. 83

C1

2632

AWR =AWR−(WI+XI+YI+ZI) AWI =AWI+(WR+XR+YR+ZR)	AXR =AXR−(WI+XR−YI−ZR) AXI =AXI+(WR−XI−YR+ZI)	AYR =AYR−(WI−XI+YI−ZI) AYI =AYI+(WR−XR+YR−ZR)	AZR =AZR−(WI−XR−YI+ZR) AZI =AZI+(WR+XI−YR−ZI)
– –	– –	– –	– –
– –	– –	– –	– –
– –	– –	– –	– –

2810

FIG. 84

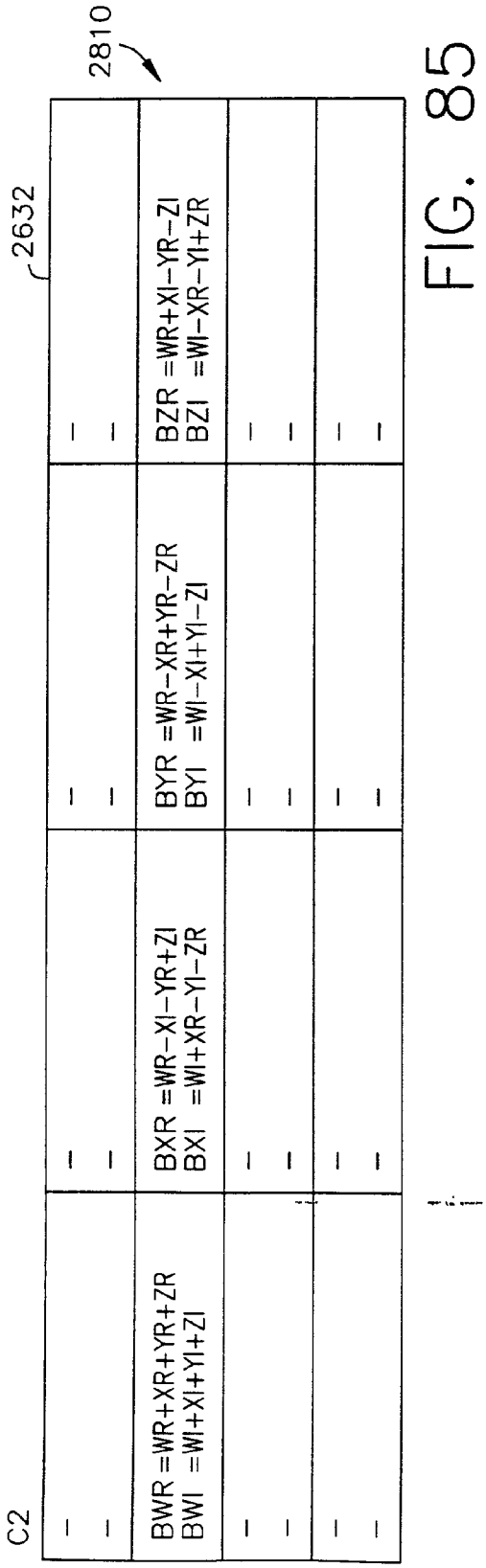
C2
2632
2810
BWR =WR+XR+YR+ZR
BWI =WI+XI+YI+ZI
BXR =WR−XI−YR+ZI
BXI =WI+XR−YI−ZR
BYR =WR−XR+YR−ZR
BYI =WI−XI+YI−ZI
BZR =WR+XI−YR−ZI
BZI =WI−XR−YI+ZR

FIG. 85

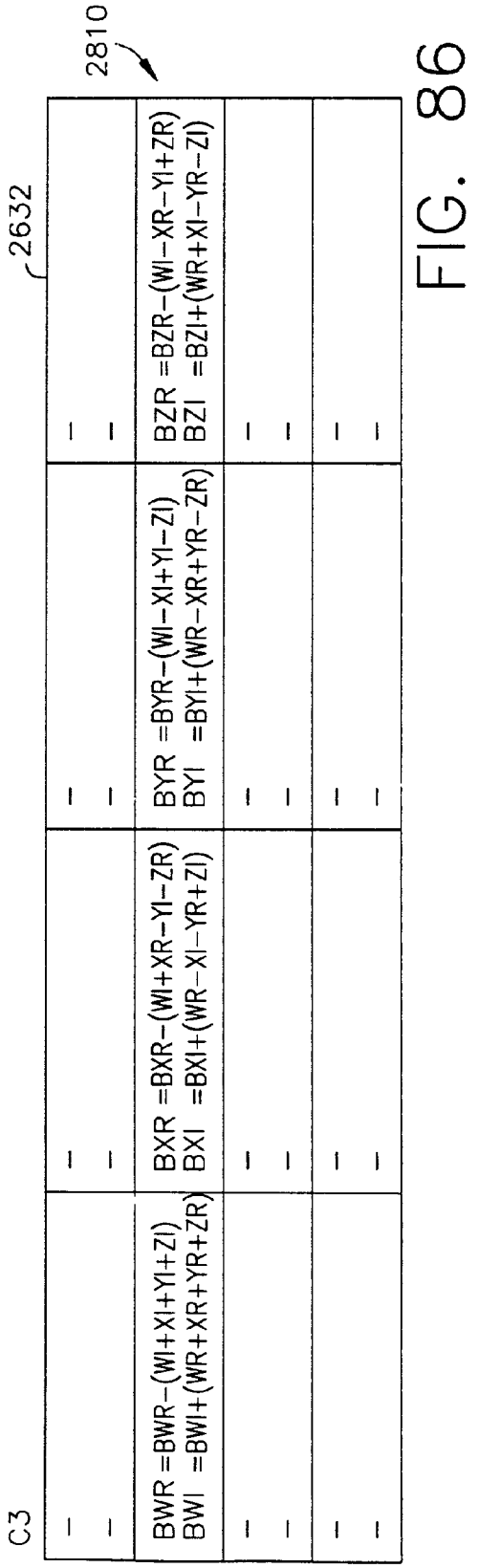
C3
2632
2810
BWR =BWR−(WI+XI+YI+ZI)
BWI =BWI+(WR+XR+YR+ZR)
BXR =BXR−(WI+XR−YI−ZR)
BXI =BXI+(WR−XI−YR+ZI)
BYR =BYR−(WI−XI+YI−ZI)
BYI =BYI+(WR−XR+YR−ZR)
BZR =BZR−(WI−XR−YI+ZR)
BZI =BZI+(WR+XI−YR−ZI)

FIG. 86

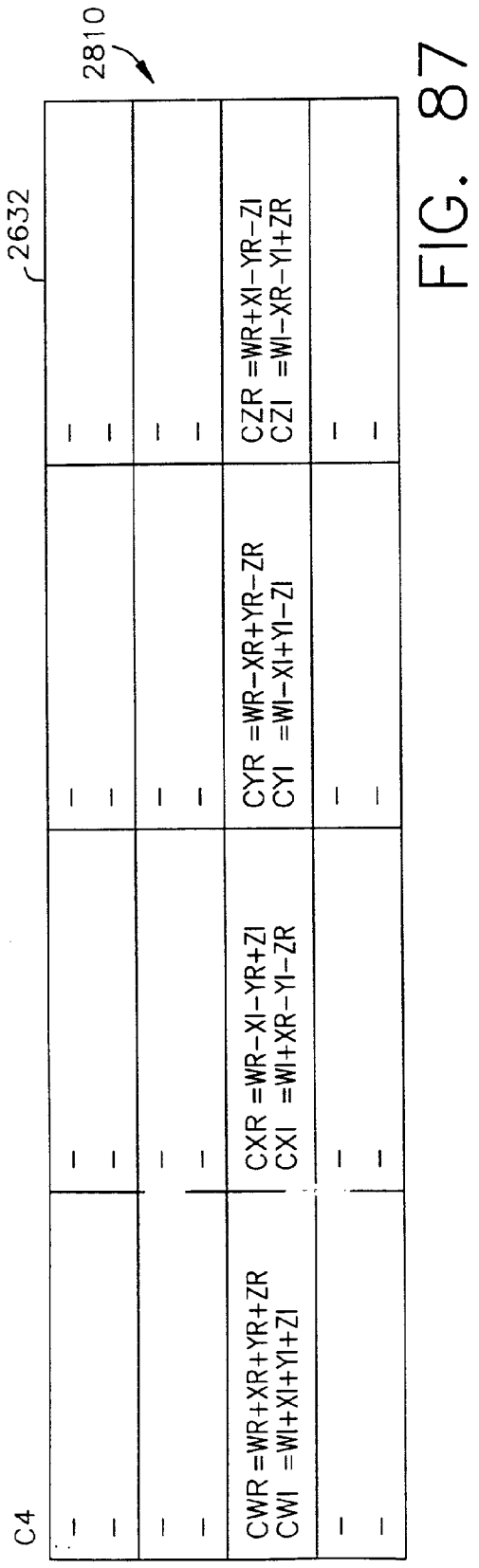
C4
2632
2810
CWR =WR+XR+YR+ZR
CWI =WI+XI+YI+ZI
CXR =WR−XI−YR+ZI
CXI =WI+XR−YI−ZR
CYR =WR−XR+YR−ZR
CYI =WI−XI+YI−ZI
CZR =WR+XI−YR−ZI
CZI =WI−XR−YI+ZR

FIG. 87

C5
2632
2810
CWR =CWR−(WI+XI+YI+ZI)
CWI =CWI+(WR+XR+YR+ZR)
CXR =CXR−(WI+XR−YI−ZR)
CXI =CXI+(WR−XI−YR+ZI)
CYR =CYR−(WI−XI+YI−ZI)
CYI =CYI+(WR−XR+YR−ZR)
CZR =CZR−(WI−XR−YI+ZR)
CZI =CZI+(WR+XI−YR−ZI)

FIG. 88

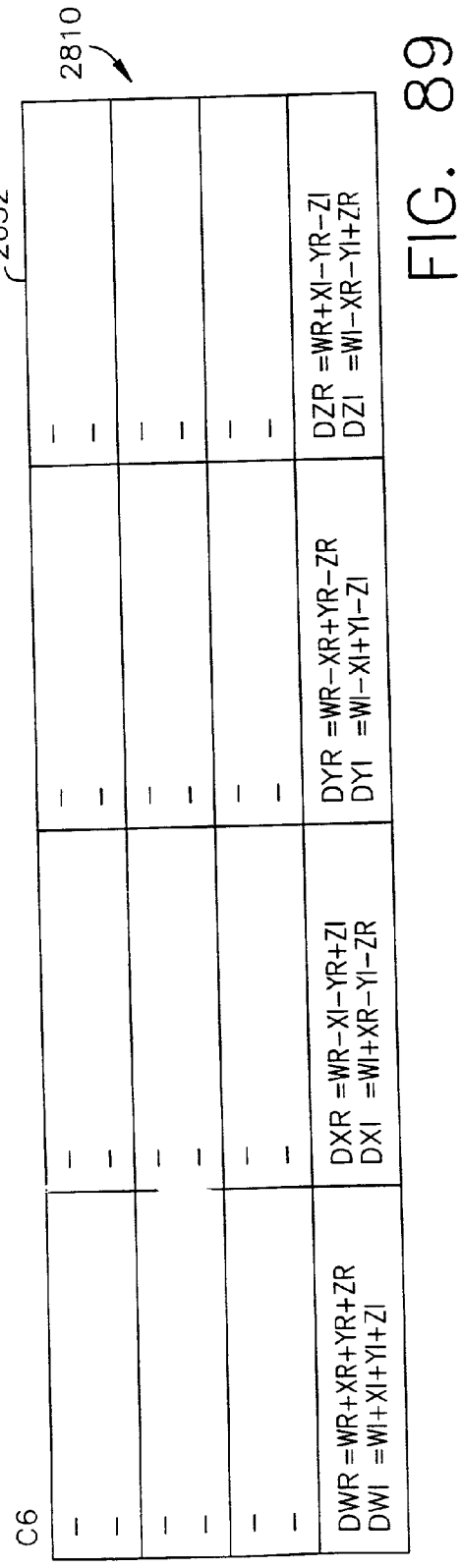
C6
2632
2810
DWR =WR+XR+YR+ZR
DWI =WI+XI+YI+ZI
DXR =WR−XI−YR+ZI
DXI =WI+XR−YI−ZR
DYR =WR−XR+YR−ZR
DYI =WI−XI+YI−ZI
DZR =WR+XI−YR−ZI
DZI =WI−XR−YI+ZR

FIG. 89

C7
2632
2810
DWR =DWR−(WI+XI+YI+ZI)
DWI =DWI+(WR+XR+YR+ZR)
DXR =DXR−(WI+XR−YI−ZR)
DXI =DXI+(WR−XI−YR+ZI)
DYR =DYR−(WI−XI+YI−ZI)
DYI =DYI+(WR−XR+YR−ZR)
DZR =DZR−(WI−XR−YI+ZR)
DZI =DZI+(WR+XI−YR−ZI)

FIG. 90

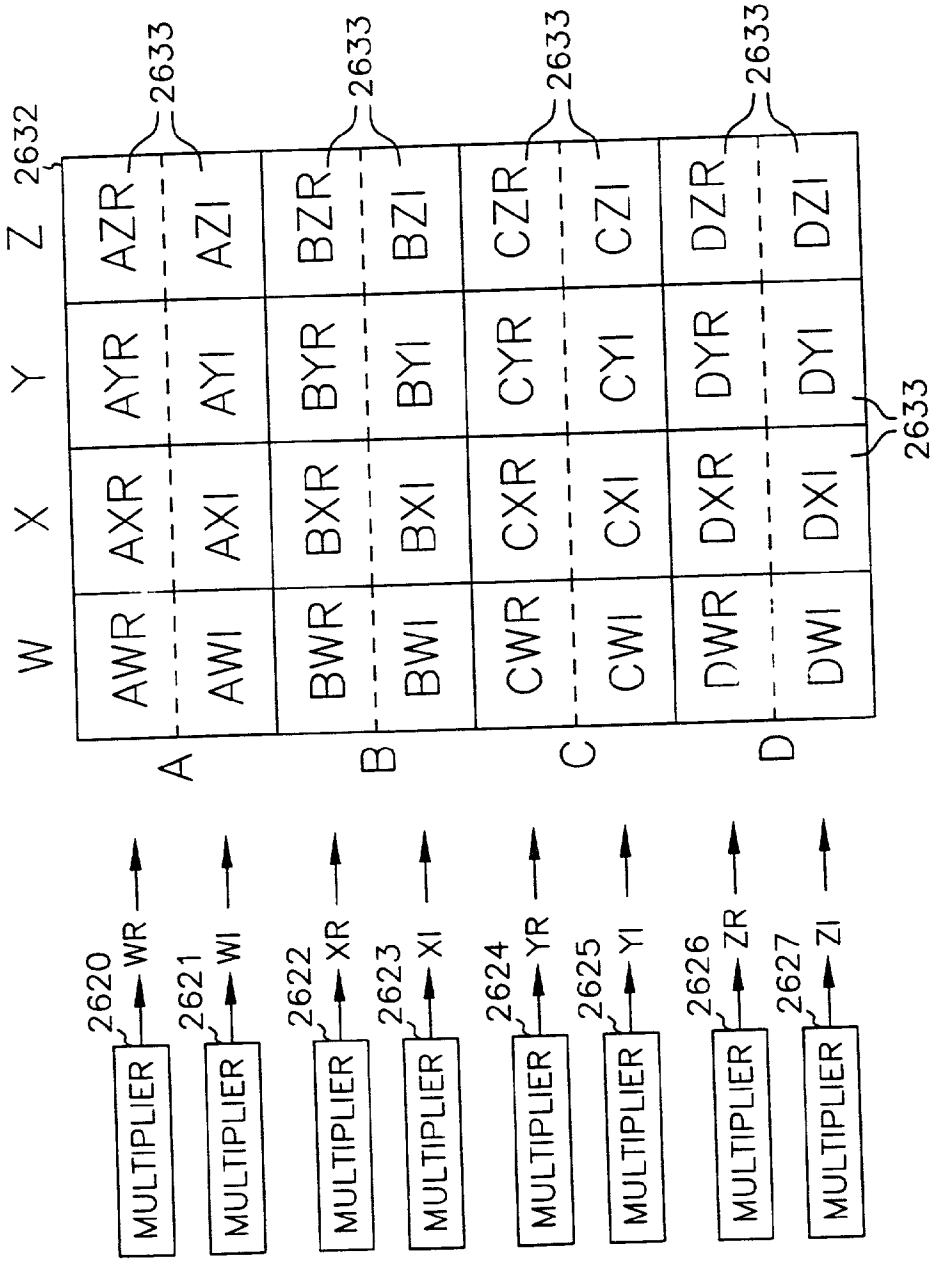
W
X
Y
Z
2632
2633
A
B
C
D
AWR
AWI
AXR
AXI
AYR
AYI
AZR
AZI
BWR
BWI
BXR
BXI
BYR
BYI
BZR
BZI
CWR
CWI
CXR
CXI
CYR
CYI
CZR
CZI
DWR
DWI
DXR
DXI
DYR
DYI
DZR
DZI
MULTIPLIER
2620
WR
2621
WI
2622
XR
2623
XI
2624
YR
2625
YI
2626
ZR
2627
ZI

FIG. 91

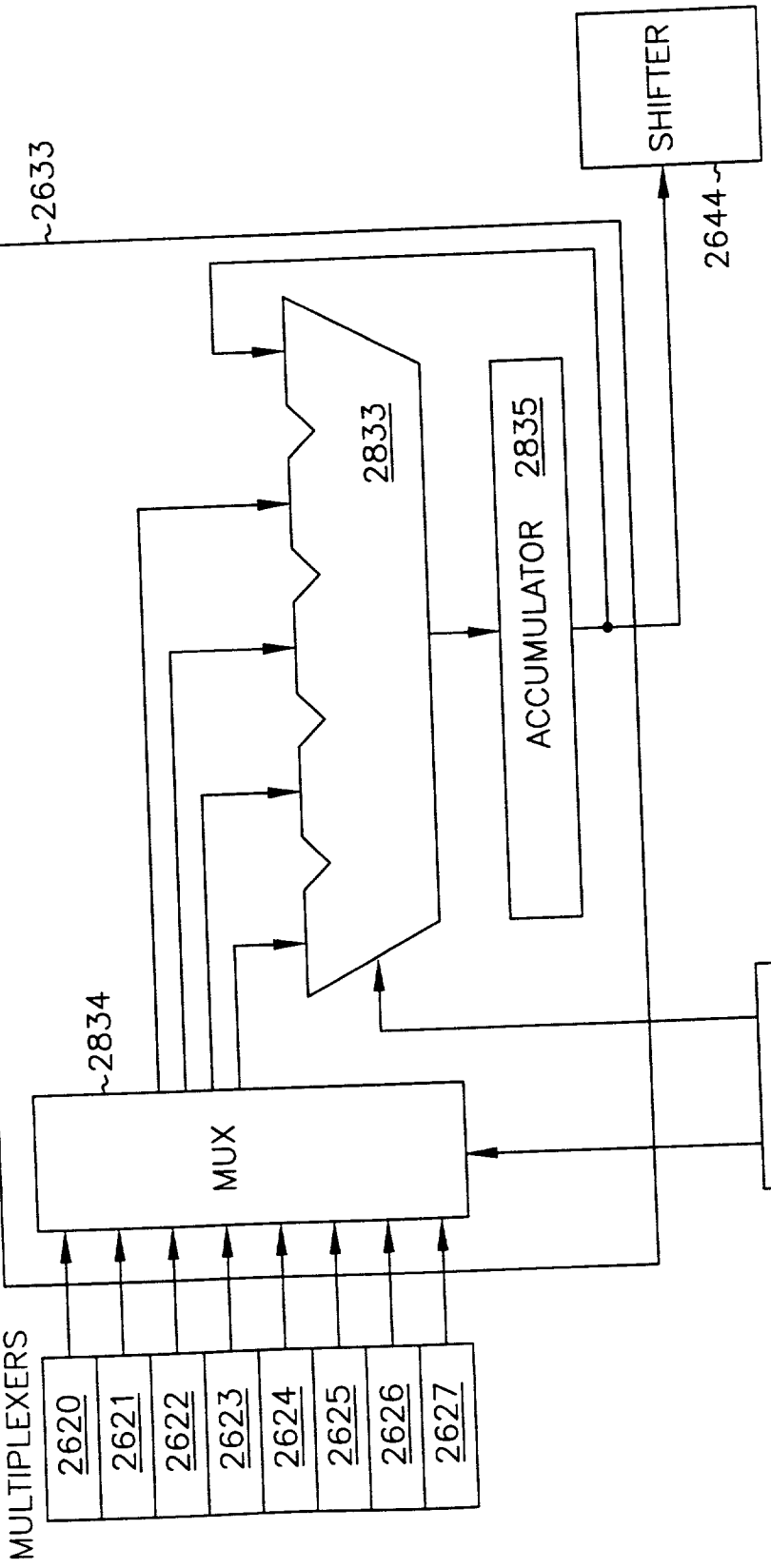
MULTIPLEXERS
2620
2621
2622
2623
2624
2625
2626
2627
MUX
2834
2633
2833
ACCUMULATOR 2835
SHIFTER
2644
COMMAND SEQUENCER
2640

FIG. 92

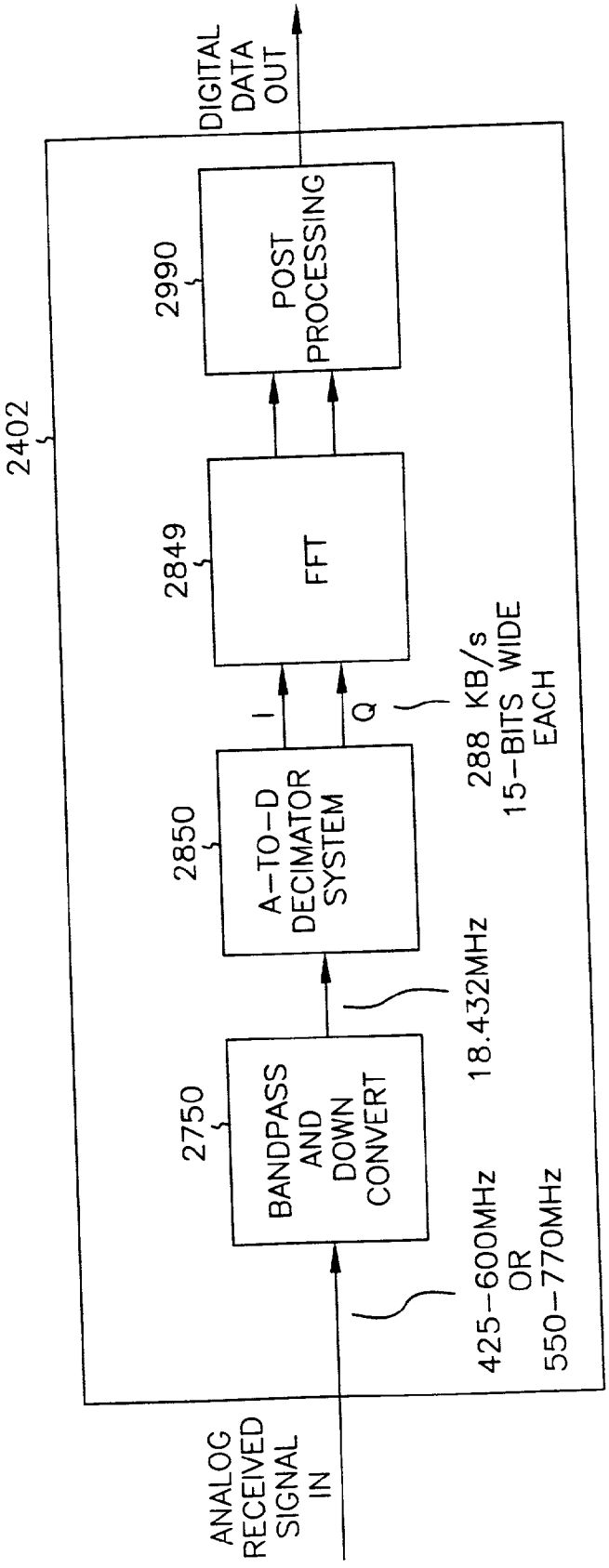
ANALOG RECEIVED SIGNAL IN
425–600MHz OR 550–770MHz
2750
BANDPASS AND DOWN CONVERT
18.432MHz
2850
A–TO–D DECIMATOR SYSTEM
I
Q
288 KB/s 15–BITS WIDE EACH
2849
FFT
2990
POST PROCESSING
DIGITAL DATA OUT
2402

FIG. 93

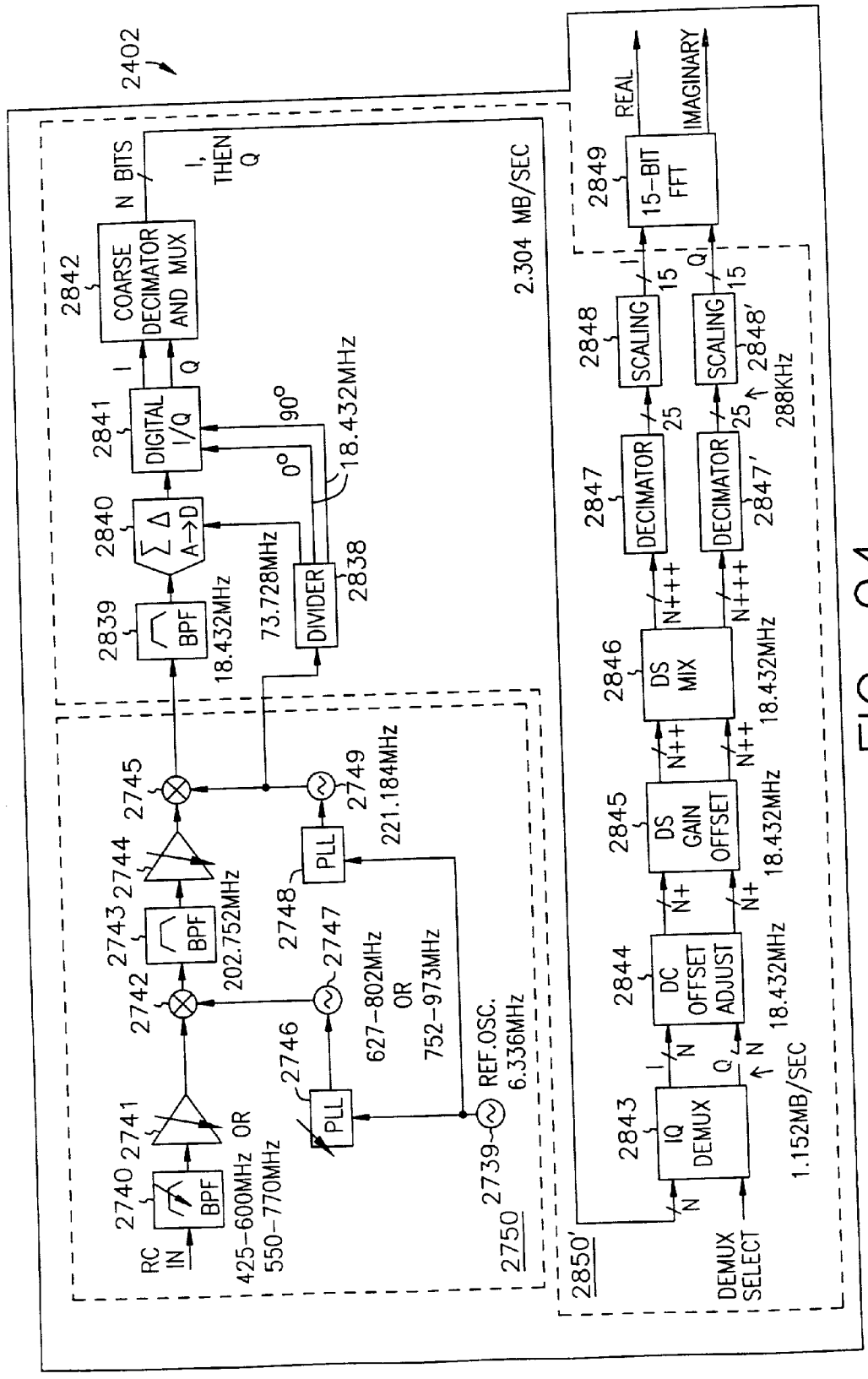
2402
RC IN
2740
BPF
425–600MHz OR
550–770MHz
2741
2742
2743
BPF
202.752MHz
2744
2745
2746
PLL
627–802MHz
OR
752–973MHz
2747
2748
PLL
2749
221.184MHz
2750
2739
REF.OSC.
6.336MHz
2838
DIVIDER
73.728MHz
0°
90°
18.432MHz
2839
BPF
18.432MHz
2840
Σ Δ A→D
2841
DIGITAL I/Q
I
Q
2842
COARSE DECIMATOR AND MUX
N BITS
I, THEN Q
2.304 MB/SEC
2850'
2843
IQ DEMUX
DEMUX SELECT
1.152MB/SEC
2844
DC OFFSET ADJUST
18.432MHz
2845
DS GAIN OFFSET
18.432MHz
2846
DS MIX
18.432MHz
2847
DECIMATOR
2847'
DECIMATOR
2848
SCALING
2848'
SCALING
288KHz
2849
15-BIT FFT
REAL
IMAGINARY

FIG. 94

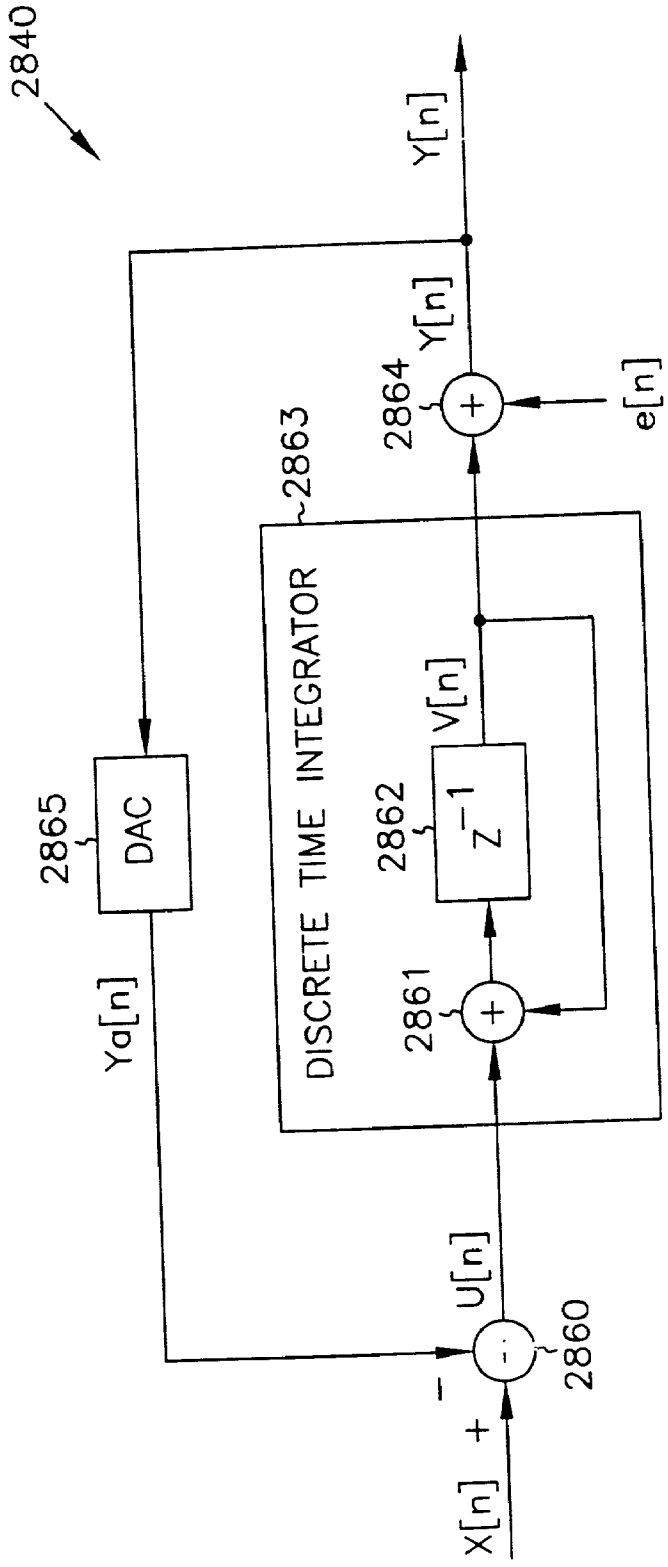
2840
Y[n]
Y[n]
2864
e[n]
2863
DISCRETE TIME INTEGRATOR
V[n]
2862
Z^{-1}
2861
2865
DAC
Ya[n]
U[n]
2860
X[n]

FIG. 95

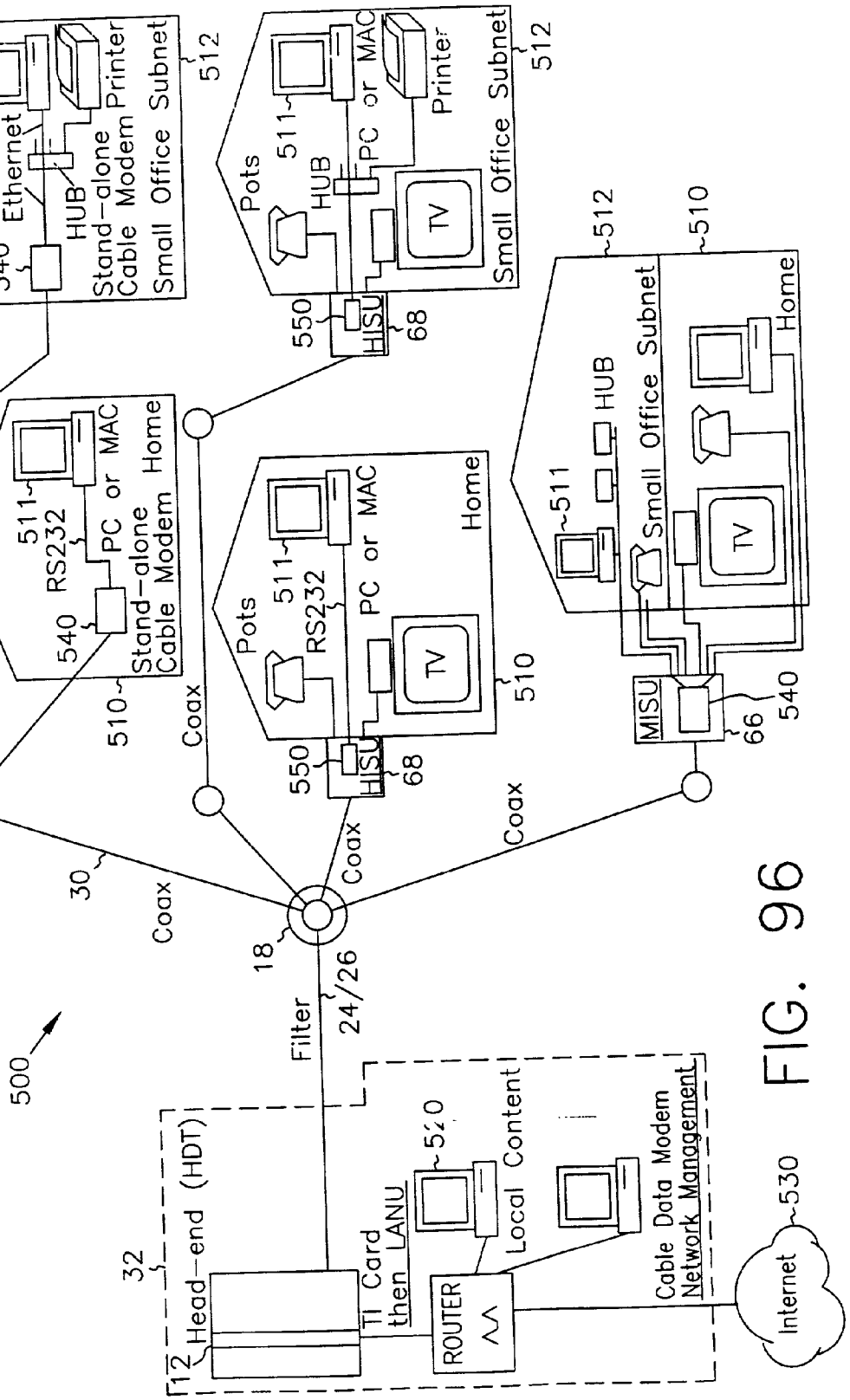
500
Head-end (HDT)
32
12
TI Card
then LANU
ROUTER
520
Local Content
Cable Data Modem
Network Management
Internet
530
Filter
24/26
18
30
Coax
Coax
Coax
Coax
Coax
PC or MAC
511
Ethernet
540
HUB
Stand-alone
Cable Modem
Printer
Small Office Subnet
512
Pots
HUB
PC or MAC
Printer
TV
550
HISU
68
Stand-alone
Cable Modem
Home
510
RS232
PC or MAC
Pots
Home
Small Office Subnet
HUB
MISU
66
540

FIG. 96

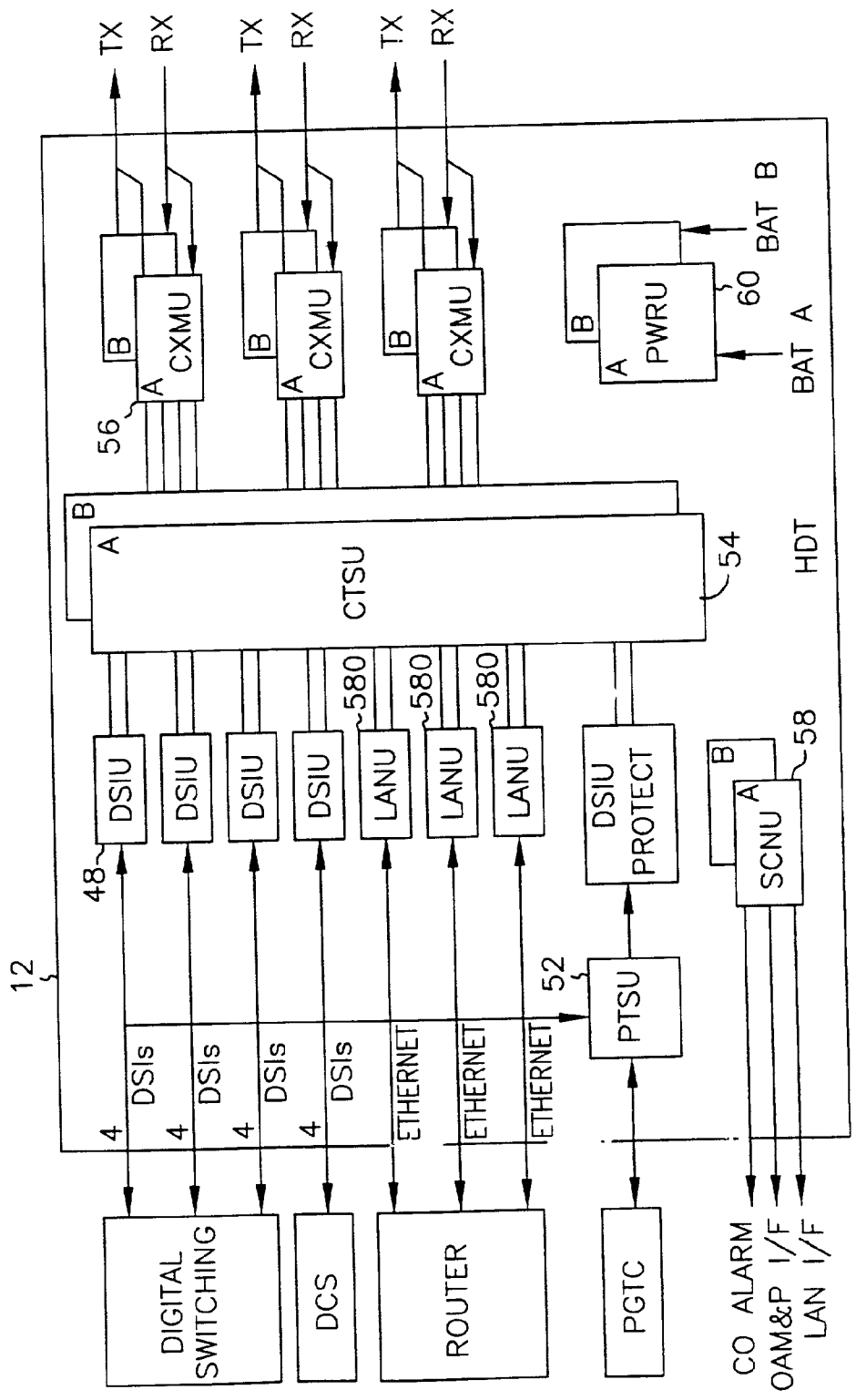
TX
RX
TX
RX
TX
RX
CXMU
CXMU
CXMU
PWRU
BAT B
BAT A
60
56
54
CTSU
HDT
DSIU
DSIU
DSIU
DSIU
LANU
LANU
LANU
580
580
580
DSIU PROTECT
SCNU
58
48
12
52
PTSU
4
DSIs
ETHERNET
DIGITAL SWITCHING
DCS
ROUTER
PGTC
CO ALARM
OAM&P I/F
LAN I/F

FIG. 97

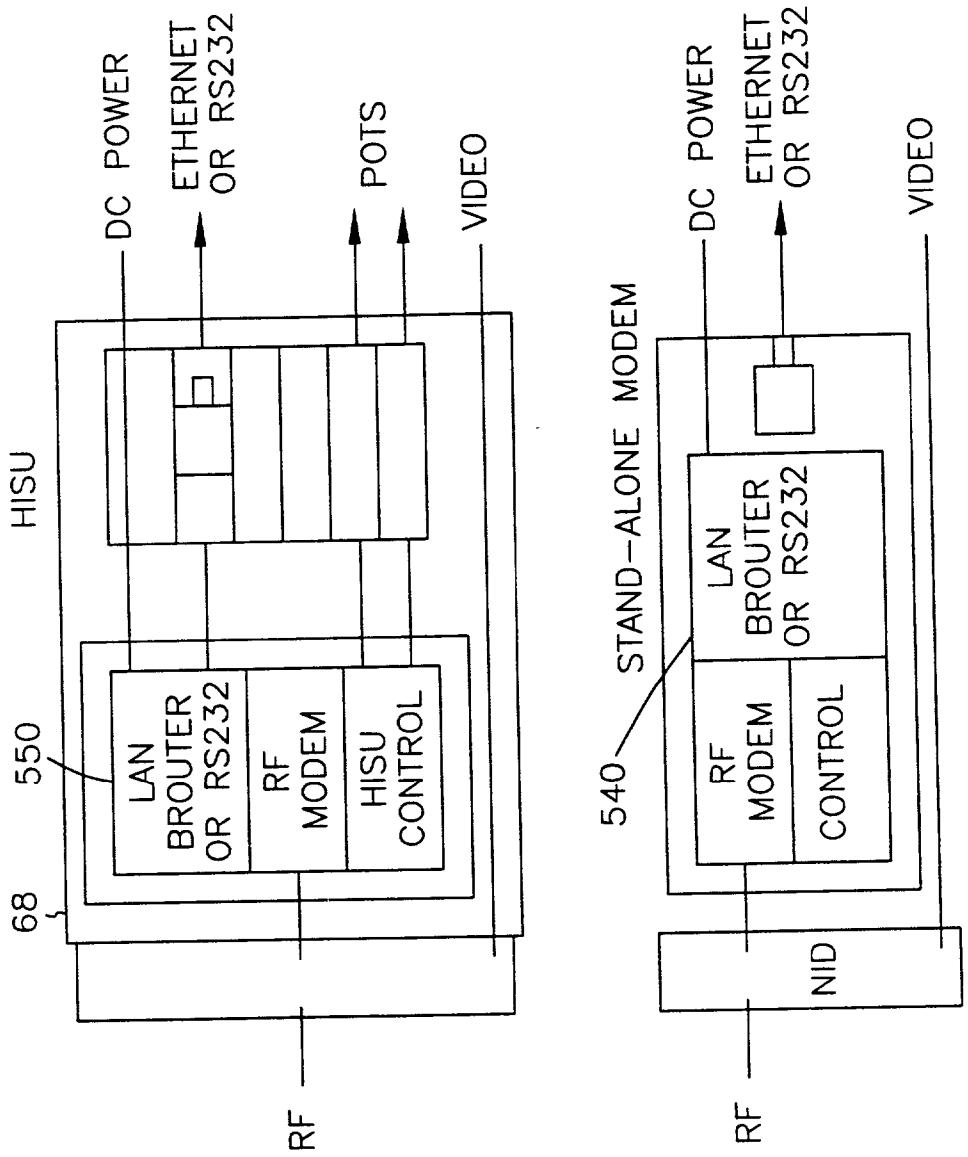
HISU
DC POWER
ETHERNET OR RS232
POTS
VIDEO
550
LAN BROUTER OR RS232
RF MODEM
HISU CONTROL
68
RF
STAND-ALONE MODEM
DC POWER
ETHERNET OR RS232
VIDEO
540
LAN BROUTER OR RS232
RF MODEM
CONTROL
NID
RF

FIG. 98

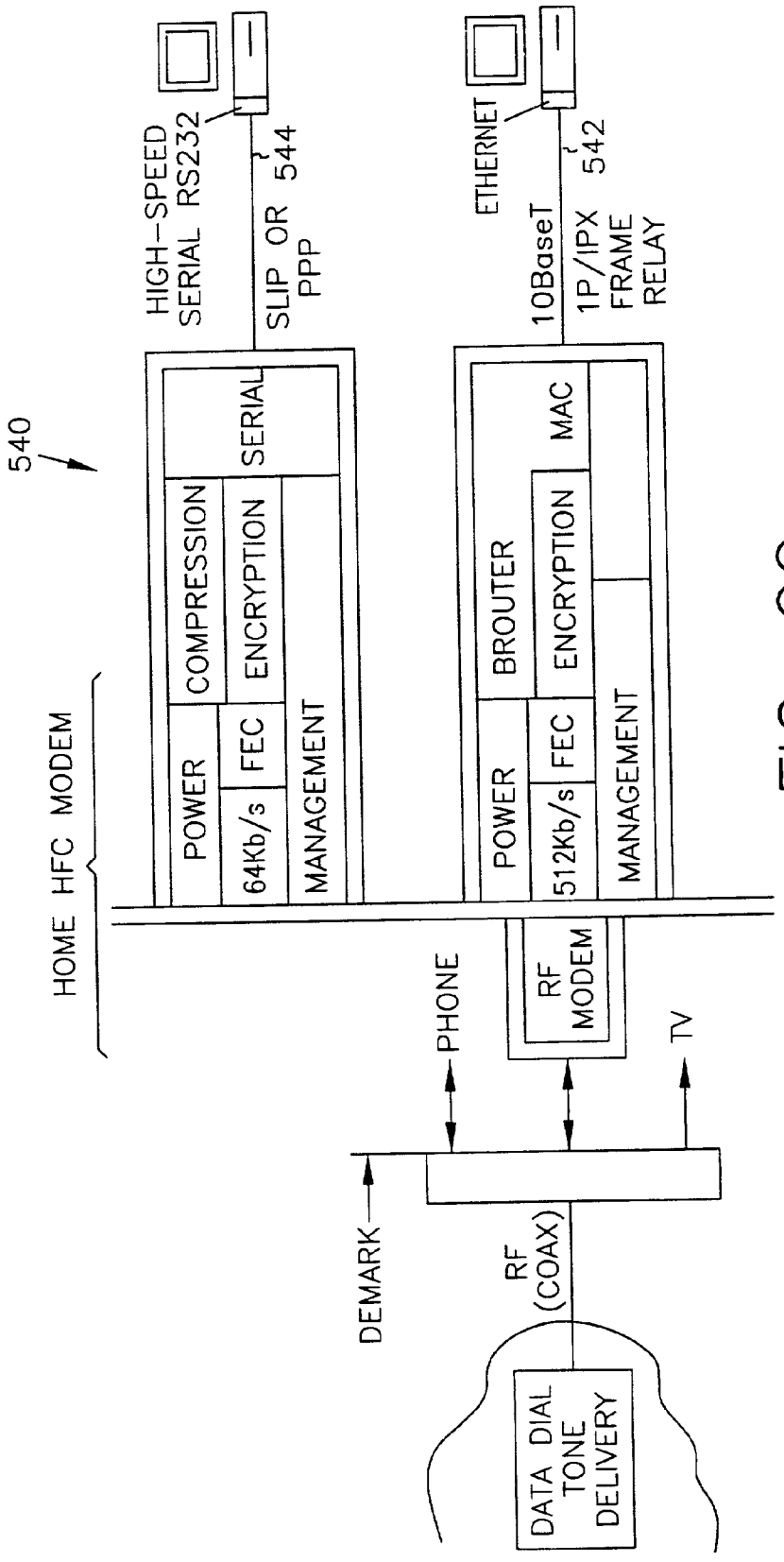
540
HOME HFC MODEM
HIGH-SPEED SERIAL RS232
SLIP OR PPP
544
ETHERNET
10BaseT
1P/IPX FRAME RELAY
542
POWER
64Kb/s
FEC
COMPRESSION
ENCRYPTION
SERIAL
MANAGEMENT
POWER
512Kb/s
FEC
BROUTER
ENCRYPTION
MAC
MANAGEMENT
RF MODEM
PHONE
TV
DEMARK
RF (COAX)
DATA DIAL TONE DELIVERY

FIG. 99

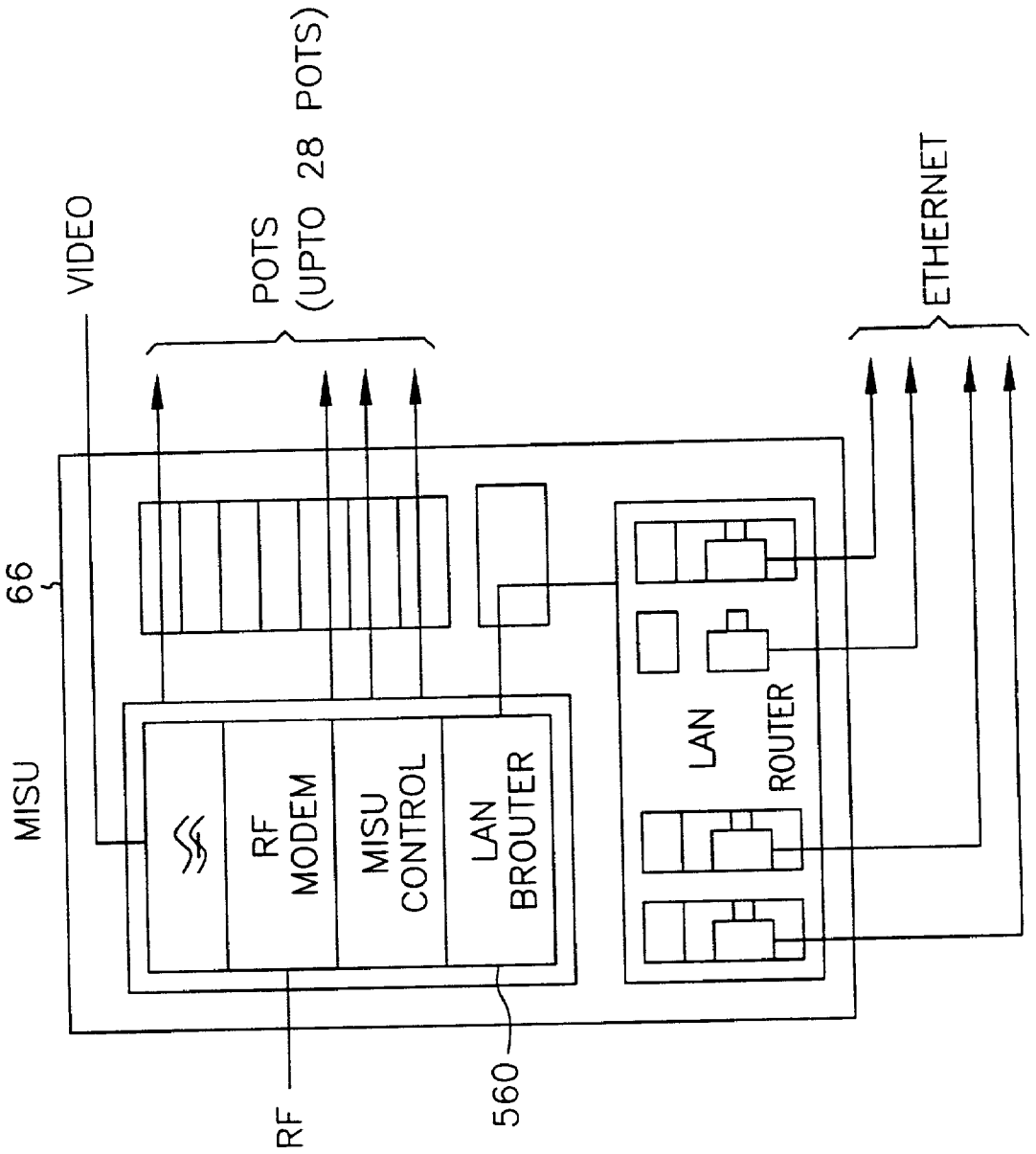
VIDEO
POTS (UPTO 28 POTS)
ETHERNET
66
MISU
RF MODEM
MISU CONTROL
LAN BROUTER
LAN ROUTER
RF
560

FIG. 100

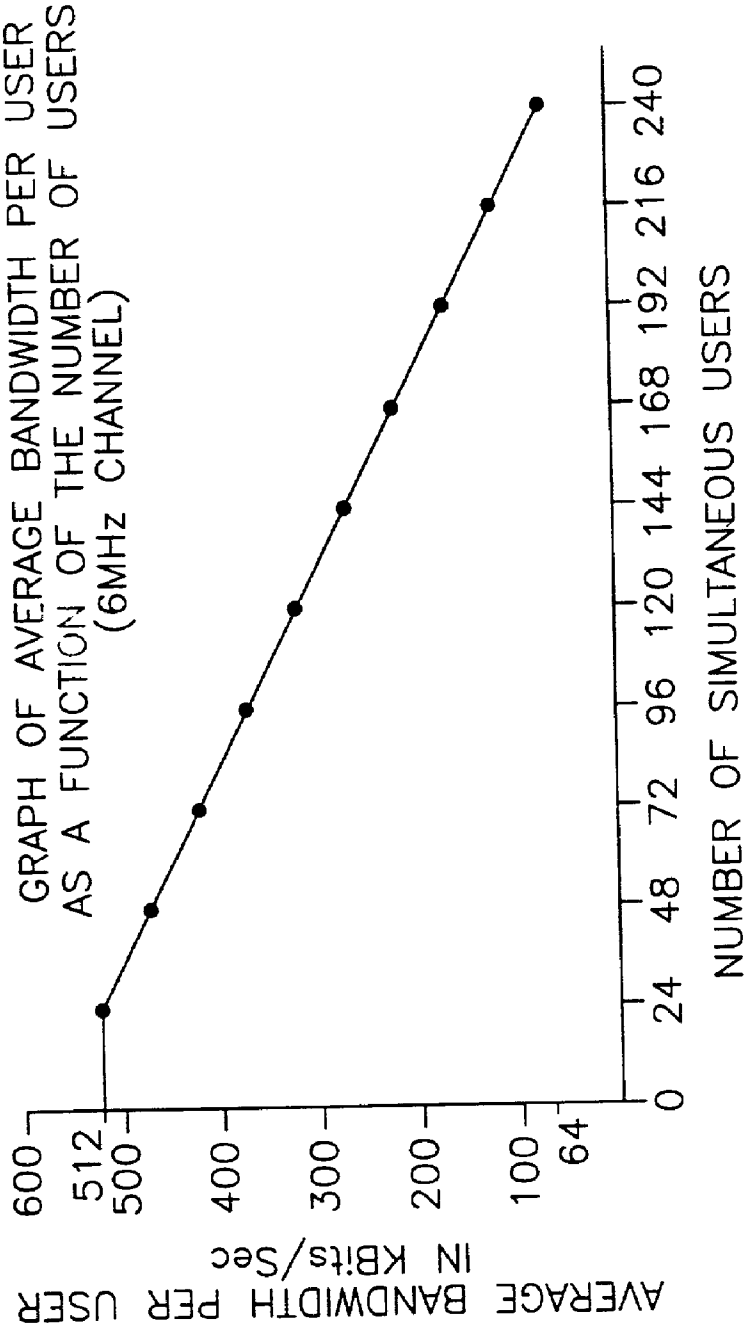
GRAPH OF AVERAGE BANDWIDTH PER USER
AS A FUNCTION OF THE NUMBER OF USERS
(6MHz CHANNEL)
AVERAGE BANDWIDTH PER USER
IN KBits/Sec
600
512
500
400
300
200
100
64
0
24
48
72
96
120
144
168
192
216
240
NUMBER OF SIMULTANEOUS USERS

FIG. 101

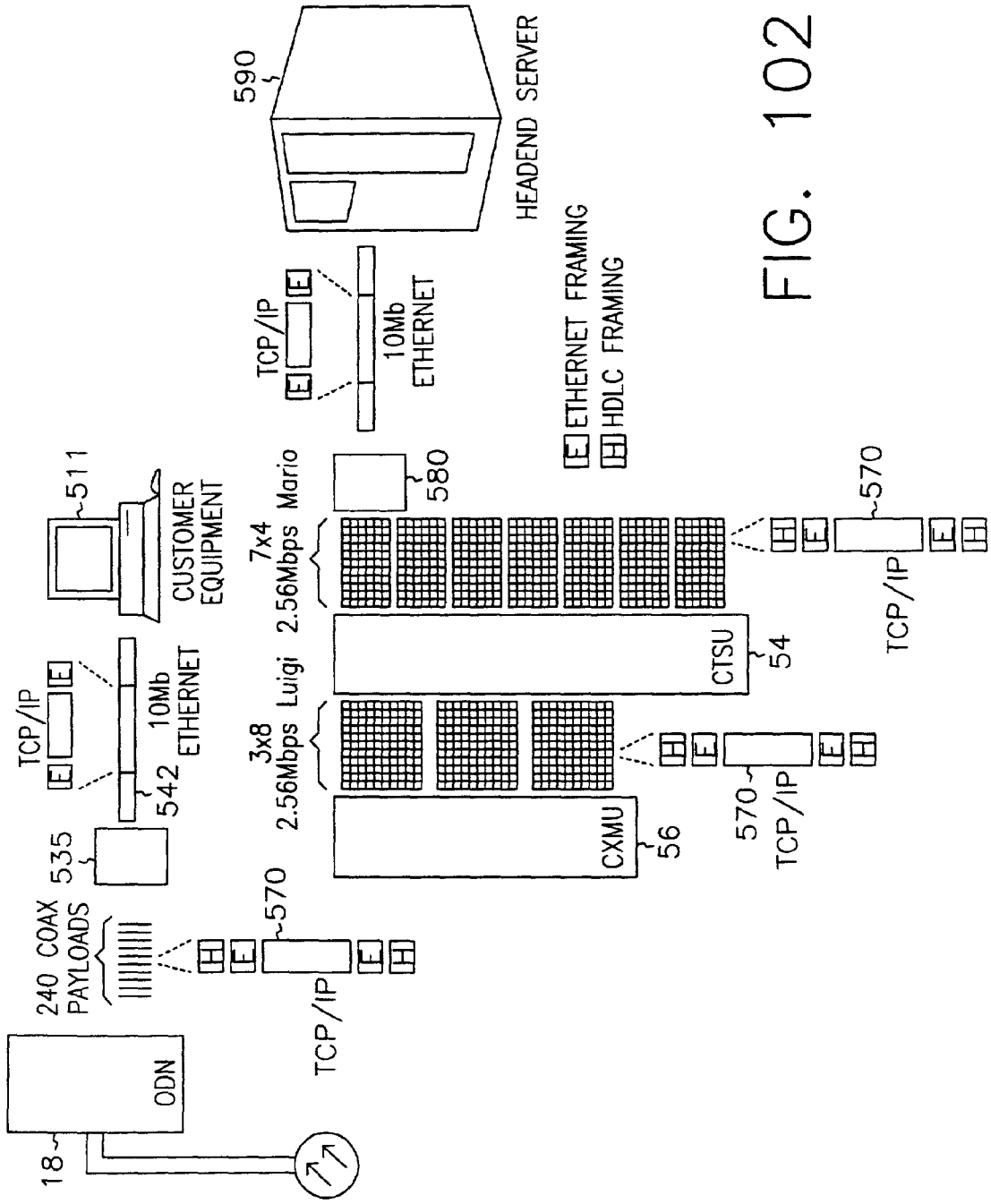
590
HEADEND SERVER
TCP/IP
10Mb ETHERNET
ETHERNET FRAMING
HDLC FRAMING
511
CUSTOMER EQUIPMENT
7x4 2.56Mbps Mario
580
570
TCP/IP
CTSU
54
TCP/IP
10Mb ETHERNET
542
3x8 2.56Mbps Luigi
CXMU
56
570
TCP/IP
535
240 COAX PAYLOADS
570
TCP/IP
ODN
18

FIG. 102

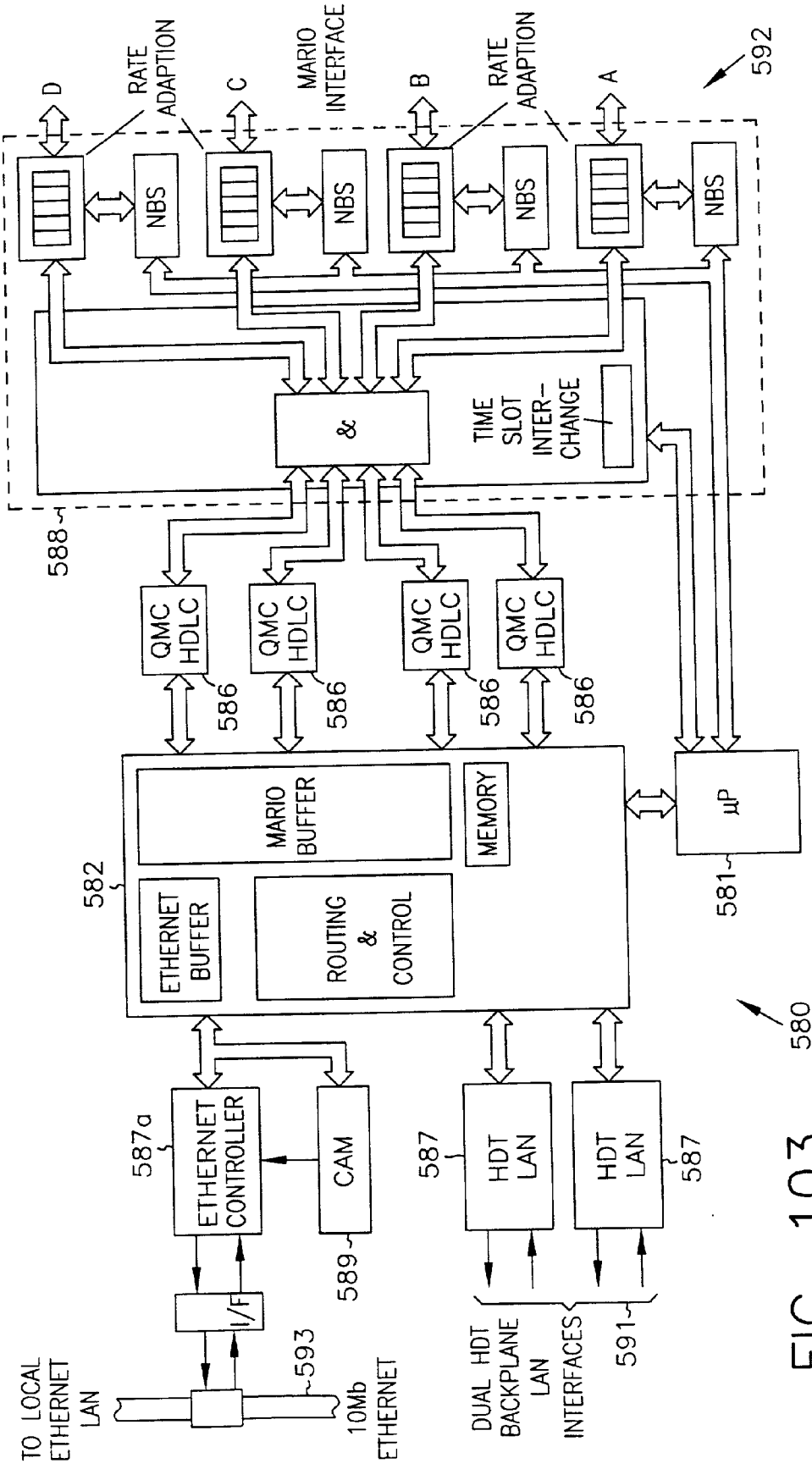
D
RATE ADAPTION
C
MARIO INTERFACE
B
RATE ADAPTION
A
592
NBS
NBS
NBS
NBS
&
TIME SLOT INTER-CHANGE
588
QMC HDLC
QMC HDLC
QMC HDLC
QMC HDLC
586
586
586
586
MARIO BUFFER
MEMORY
ETHERNET BUFFER
ROUTING & CONTROL
582
μP
581
580
587a
ETHERNET CONTROLLER
CAM
589
587
HDT LAN
HDT LAN
587
I/F
593
TO LOCAL ETHERNET LAN
10Mb ETHERNET
DUAL HDT BACKPLANE LAN INTERFACES
591

FIG. 103

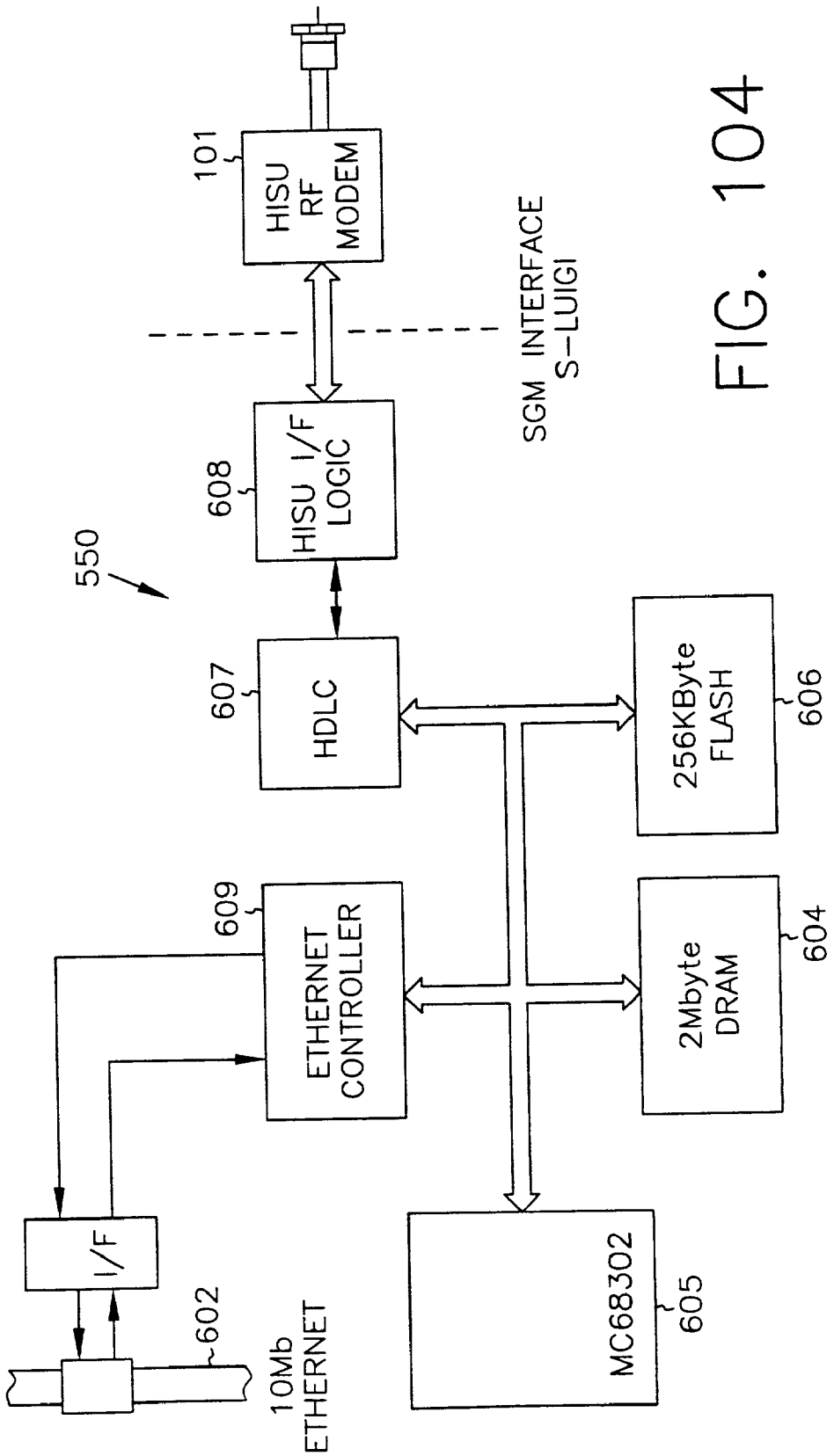
550
101
HISU RF MODEM
SGM INTERFACE S-LUIGI
608
HISU I/F LOGIC
607
HDLC
256KByte FLASH
606
609
ETHERNET CONTROLLER
2Mbyte DRAM
604
I/F
602
10Mb ETHERNET
MC68302
605

FIG. 104

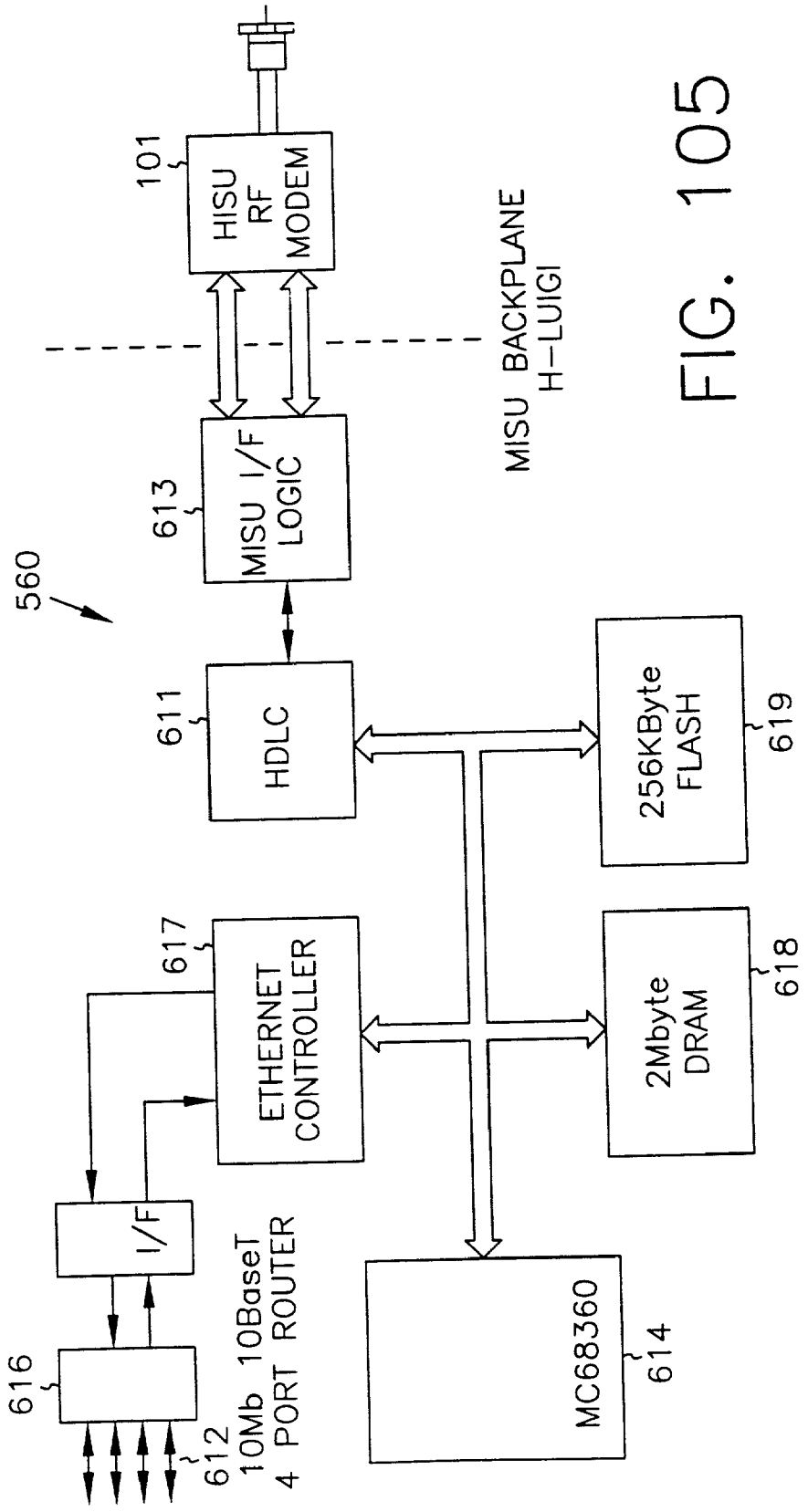
560
101
HISU RF MODEM
MISU BACKPLANE H-LUIGI
613
MISU I/F LOGIC
611
HDLC
256KByte FLASH
619
617
ETHERNET CONTROLLER
2Mbyte DRAM
618
I/F
616
612
10Mb 10BaseT 4 PORT ROUTER
MC68360
614

FIG. 105

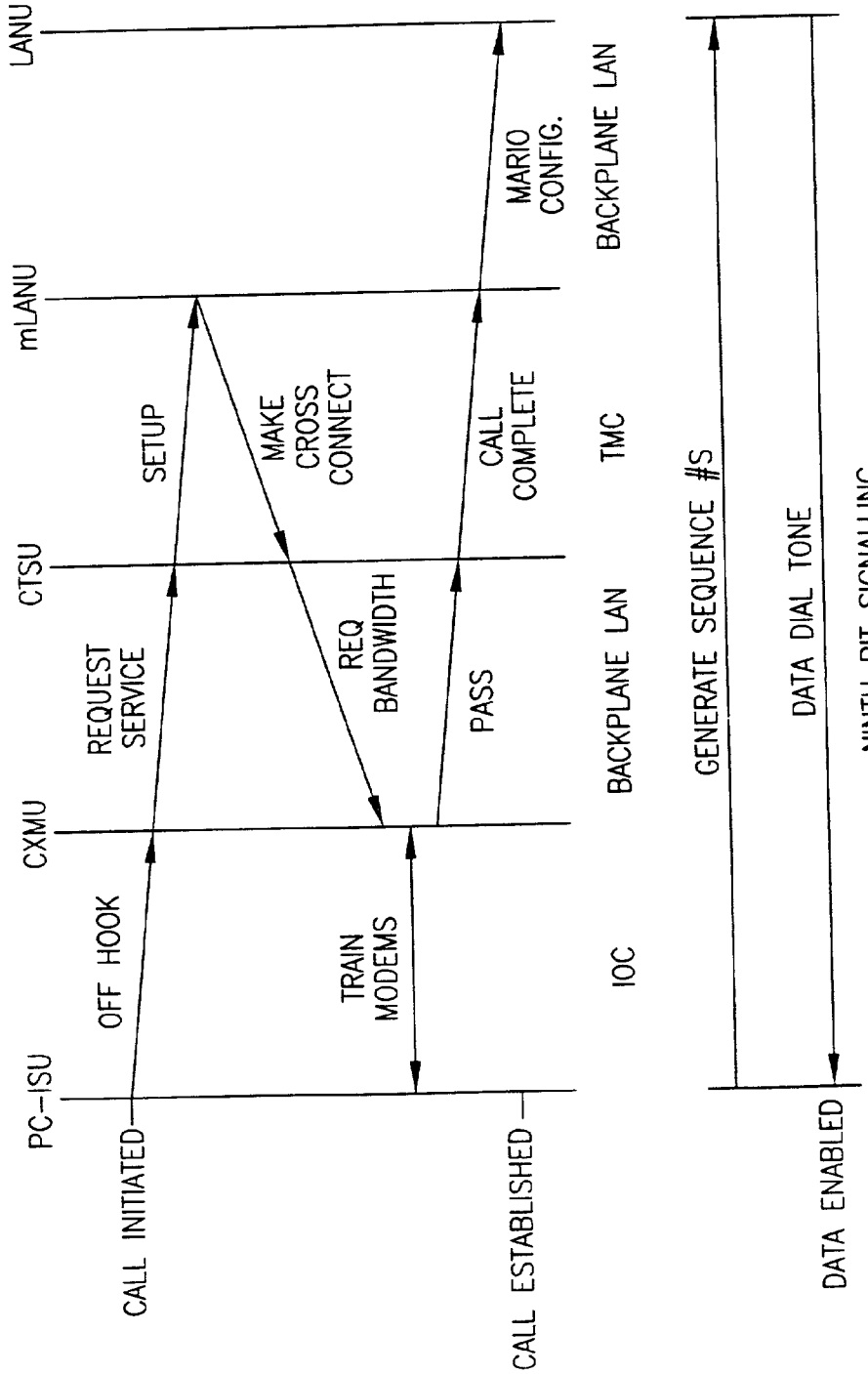
LANU
mLANU
CTSU
CXMU
PC-ISU
CALL INITIATED
OFF HOOK
REQUEST SERVICE
SETUP
MAKE CROSS CONNECT
REQ BANDWIDTH
PASS
CALL COMPLETE
MARIO CONFIG.
TRAIN MODEMS
CALL ESTABLISHED
IOC
BACKPLANE LAN
TMC
BACKPLANE LAN
GENERATE SEQUENCE #S
DATA DIAL TONE
NINTH BIT SIGNALLING
DATA ENABLED

FIG. 106

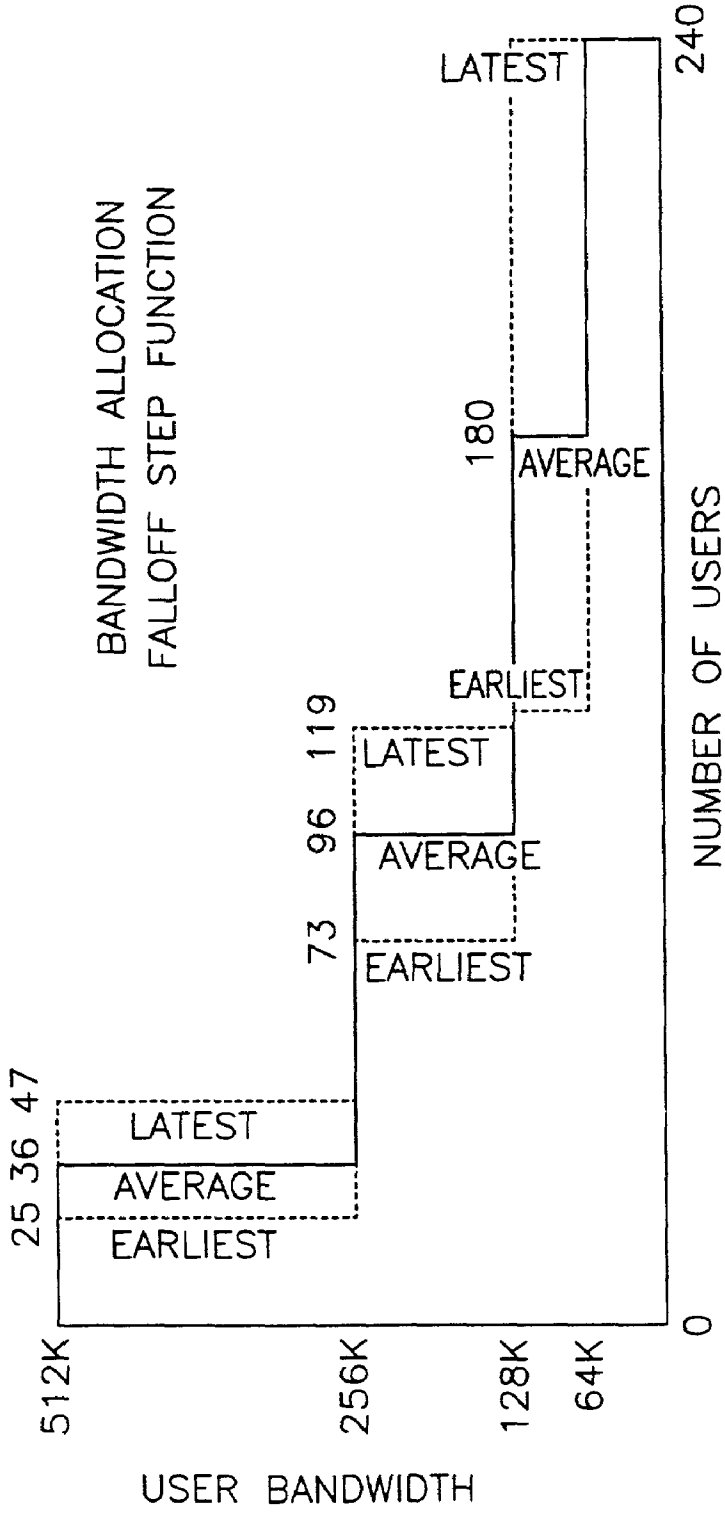
BANDWIDTH ALLOCATION
FALLOFF STEP FUNCTION
LATEST
AVERAGE
EARLIEST
LATEST
AVERAGE
EARLIEST
LATEST
AVERAGE
EARLIEST
240
180
119
96
73
47
36
25
0
NUMBER OF USERS
512K
256K
128K
64K
USER BANDWIDTH

FIG. 107

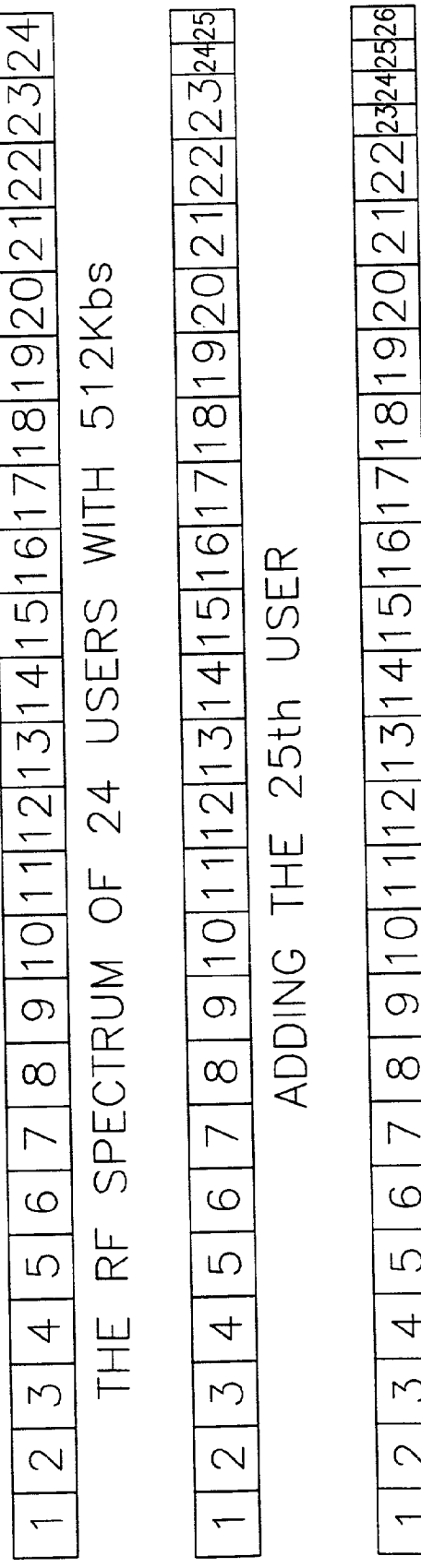
1 2 3 4 5 6 7 8 9 10 11 12 13 14 15 16 17 18 19 20 21 22 23 24
THE RF SPECTRUM OF 24 USERS WITH 512Kbs
1 2 3 4 5 6 7 8 9 10 11 12 13 14 15 16 17 18 19 20 21 22 23 24 25
ADDING THE 25th USER
1 2 3 4 5 6 7 8 9 10 11 12 13 14 15 16 17 18 19 20 21 22 23 24 25 26
ADDING THE 26th USER, ETC

FIG. 108

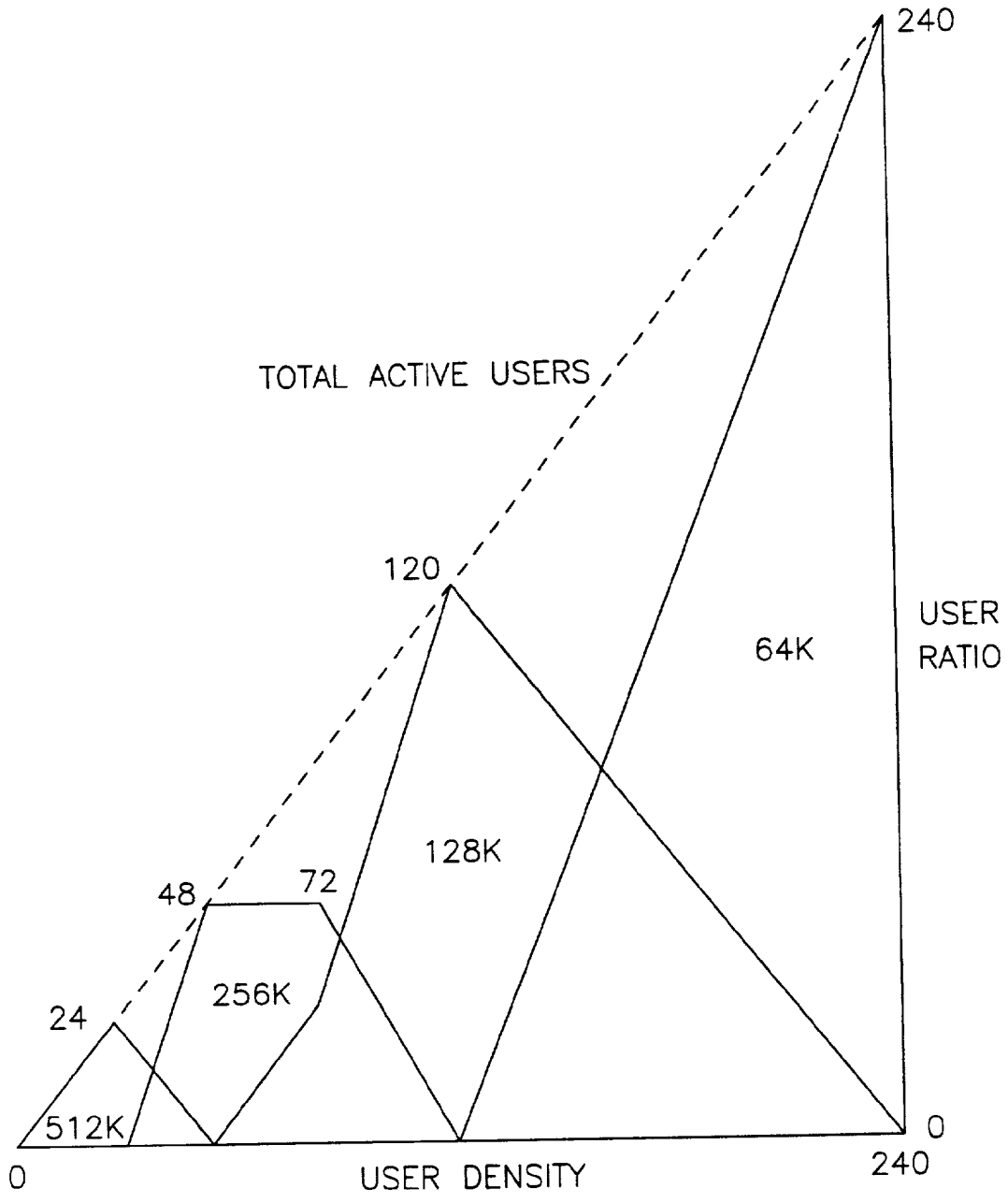
240
TOTAL ACTIVE USERS
120
USER
RATIO
64K
128K
48
72
256K
24
512K
0
0
USER DENSITY
240

FIG. 109

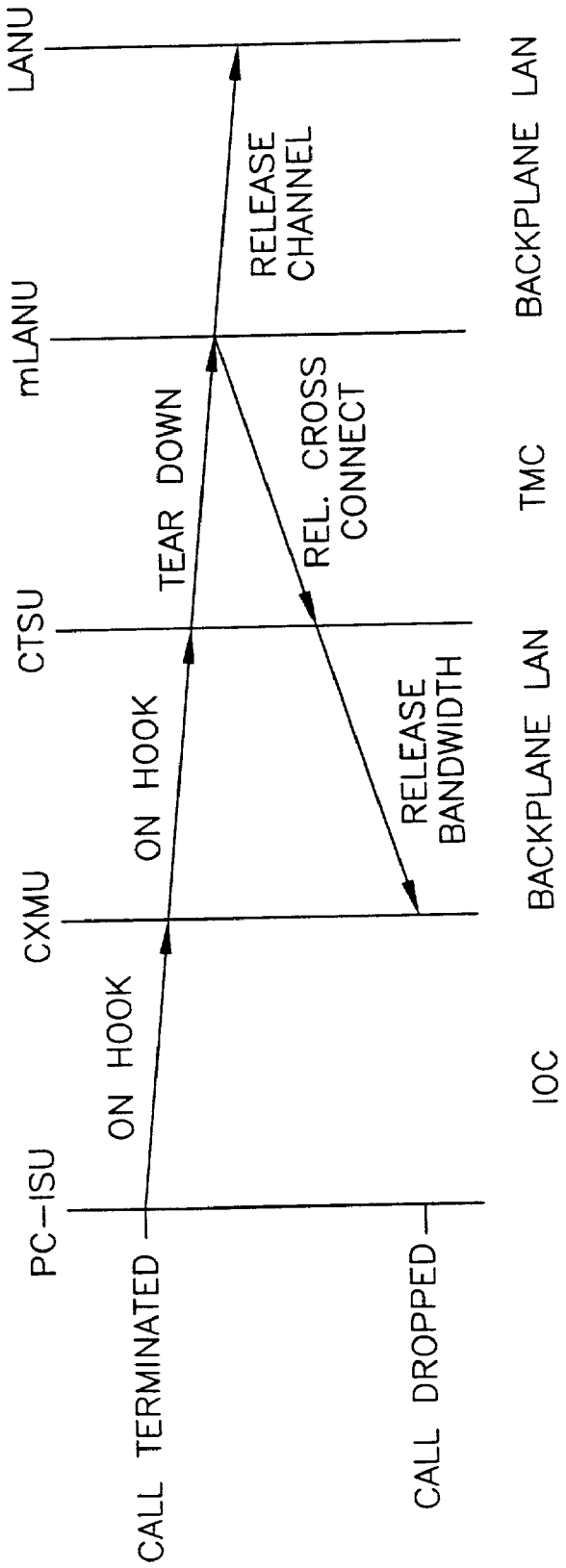
PC–ISU
CXMU
CTSU
mLANU
LANU
IOC
BACKPLANE LAN
TMC
BACKPLANE LAN
BACKPLANE LAN
CALL TERMINATED
CALL DROPPED
ON HOOK
ON HOOK
TEAR DOWN
REL. CROSS CONNECT
RELEASE BANDWIDTH
RELEASE CHANNEL

FIG. 110

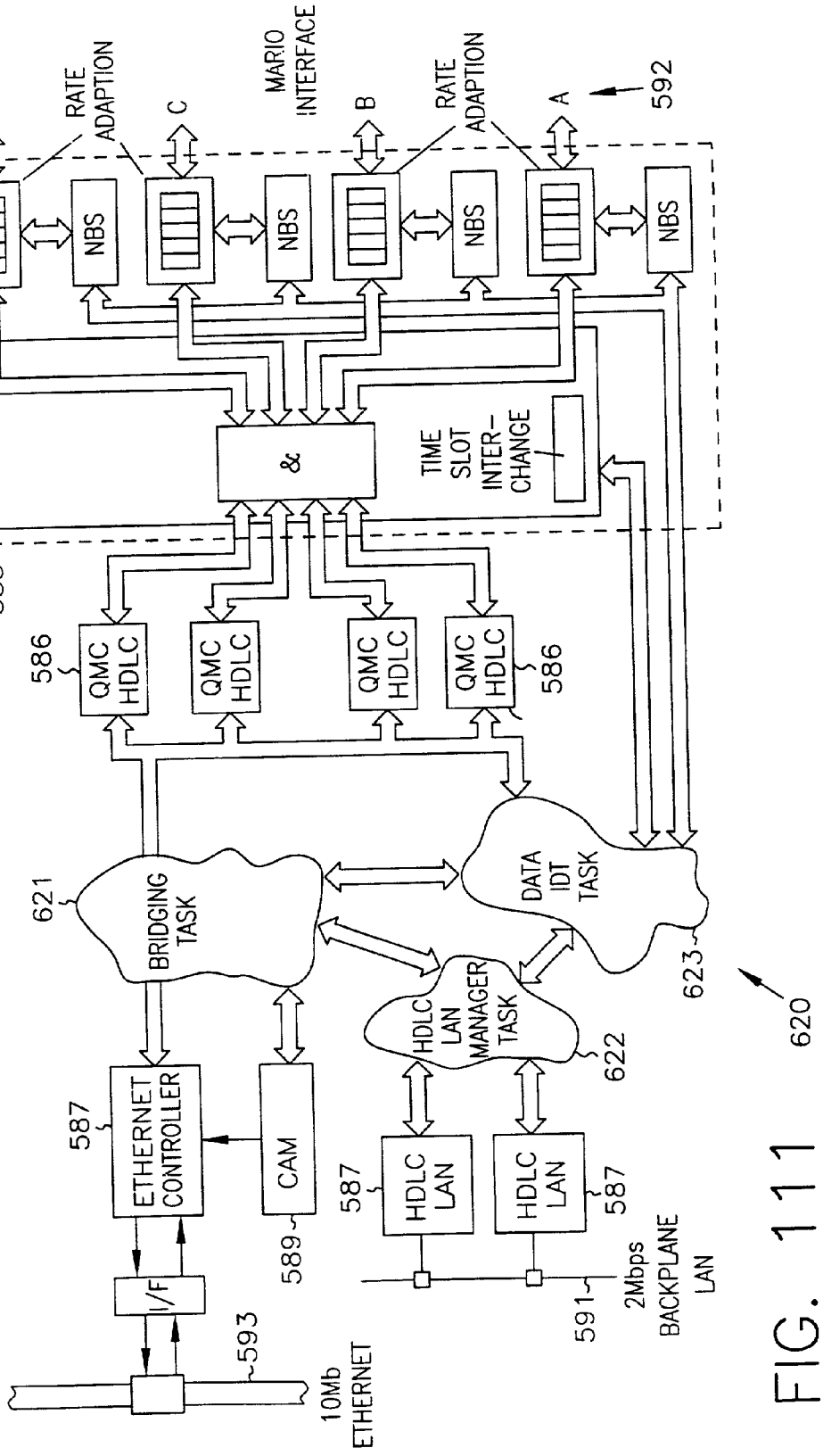
592
D
RATE ADAPTION
C
MARIO INTERFACE
B
RATE ADAPTION
A
NBS
NBS
NBS
NBS
&
TIME SLOT INTER-CHANGE
588
586
QMC HDLC
QMC HDLC
QMC HDLC
QMC HDLC
586
621
BRIDGING TASK
DATA IDT TASK
623
620
HDLC LAN MANAGER TASK
622
587
ETHERNET CONTROLLER
CAM
589
587
HDLC LAN
HDLC LAN
587
591
2Mbps BACKPLANE LAN
I/F
593
10Mb ETHERNET

FIG. 111

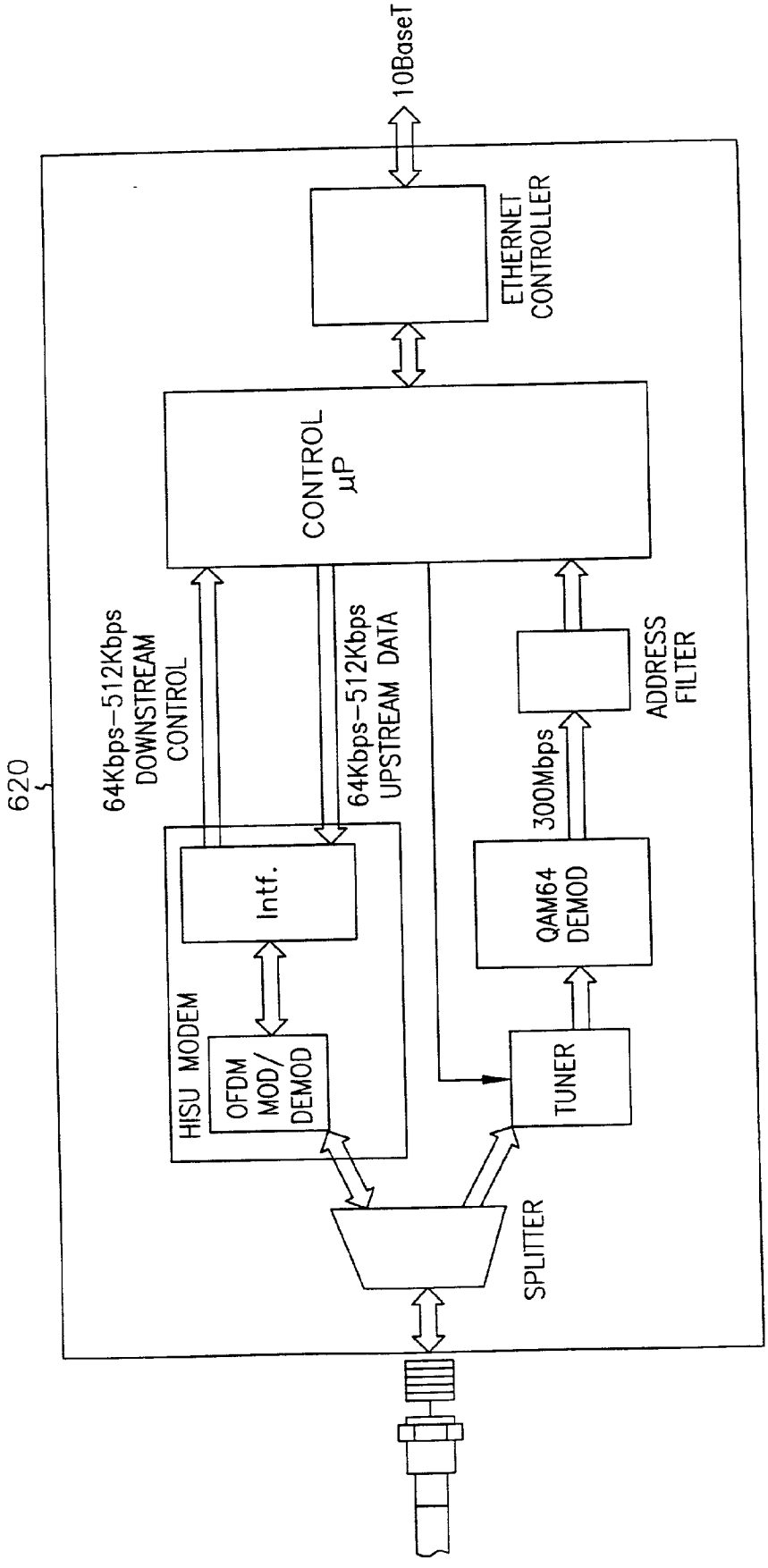
10BaseT
ETHERNET CONTROLLER
CONTROL µP
64Kbps–512Kbps DOWNSTREAM CONTROL
64Kbps–512Kbps UPSTREAM DATA
ADDRESS FILTER
300Mbps
620
Intf.
QAM64 DEMOD
HISU MODEM
OFDM MOD/ DEMOD
TUNER
SPLITTER

FIG. 112

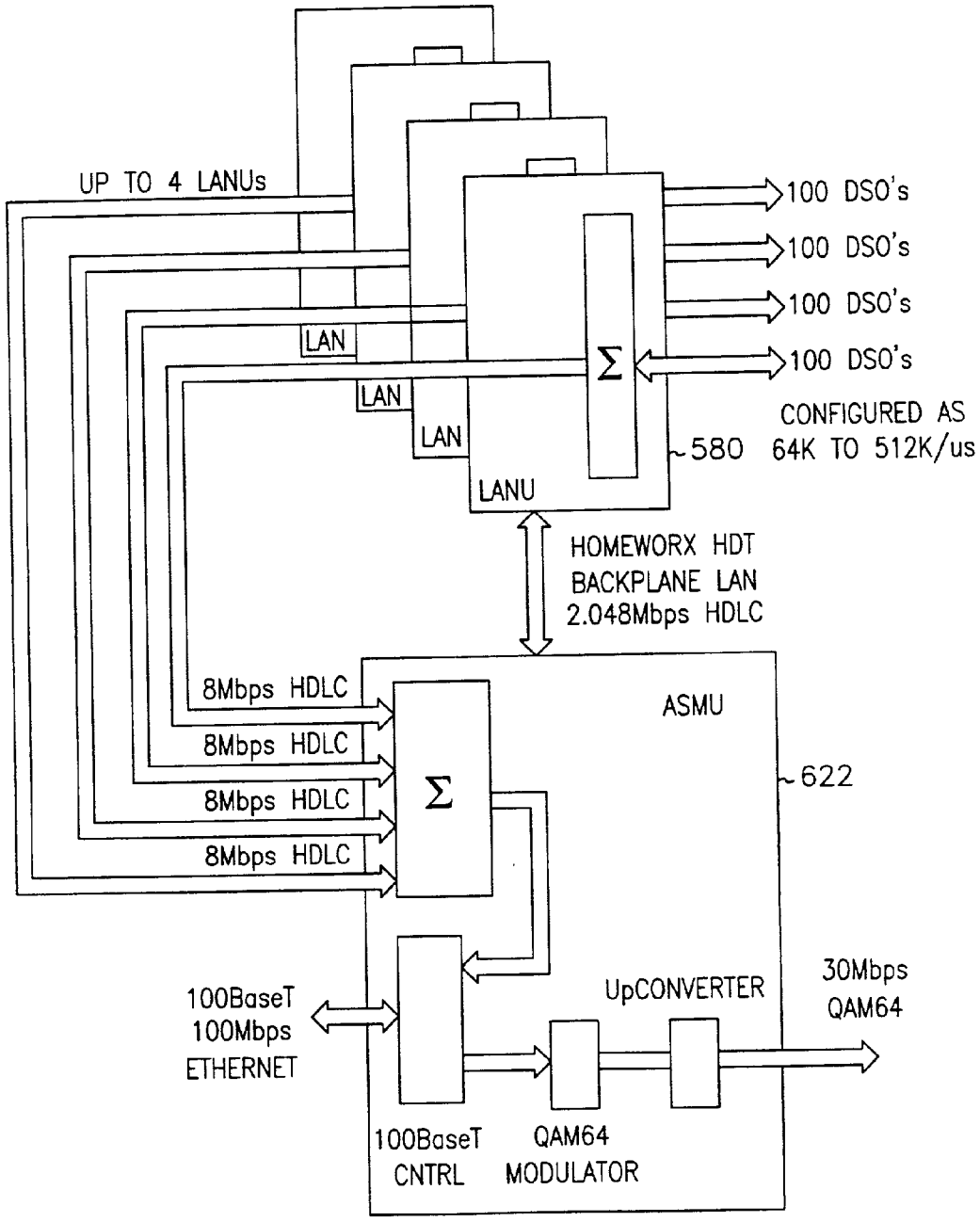
UP TO 4 LANUs
100 DSO's
100 DSO's
100 DSO's
100 DSO's
LAN
LAN
LAN
LANU
Σ
CONFIGURED AS
64K TO 512K/us
~580
HOMEWORX HDT
BACKPLANE LAN
2.048Mbps HDLC
8Mbps HDLC
8Mbps HDLC
8Mbps HDLC
8Mbps HDLC
Σ
ASMU
~622
100BaseT
100Mbps
ETHERNET
UpCONVERTER
30Mbps
QAM64
100BaseT
CNTRL
QAM64
MODULATOR

FIG. 113

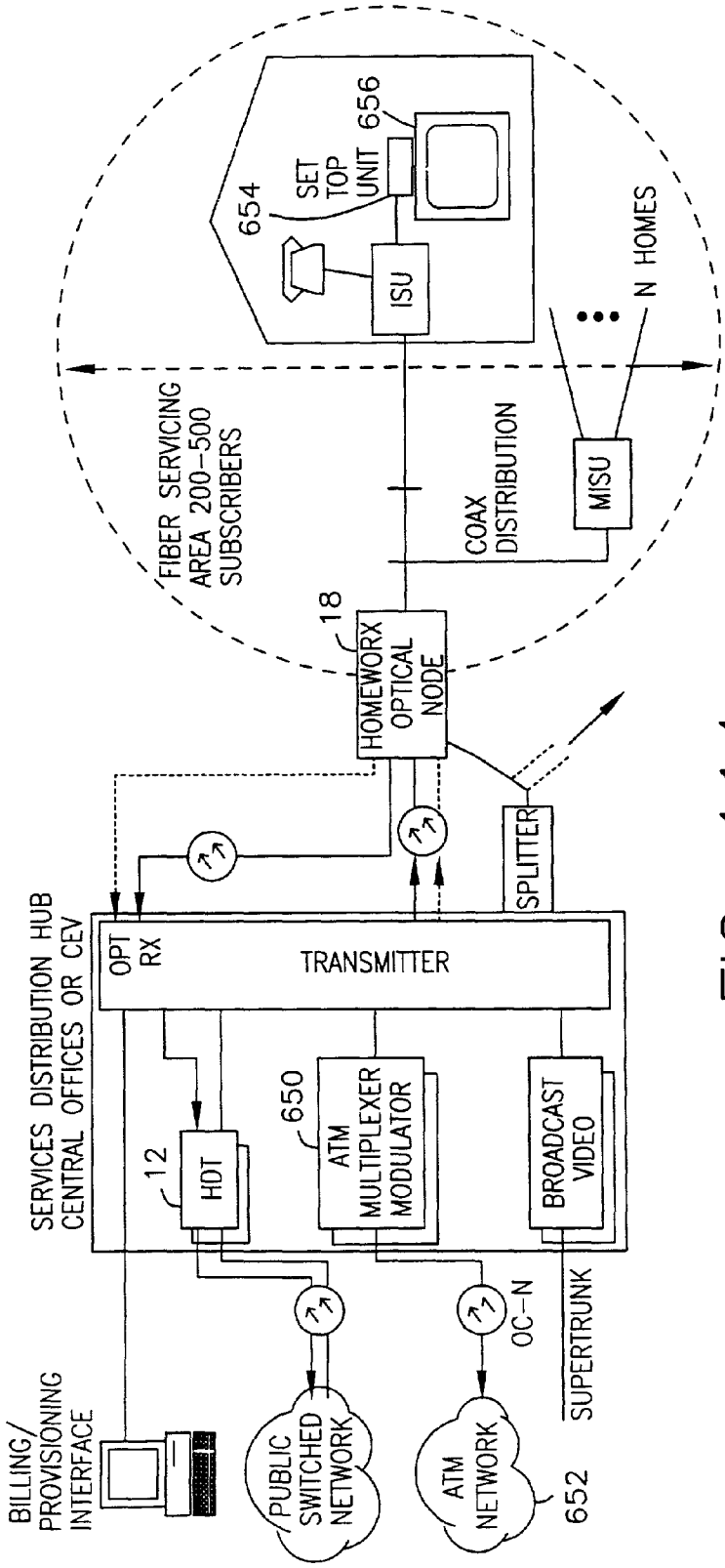
654
SET TOP UNIT 656
ISU
N HOMES
FIBER SERVICING AREA 200-500 SUBSCRIBERS
COAX DISTRIBUTION
MISU
18
HOMEWORX OPTICAL NODE
SPLITTER
SERVICES DISTRIBUTION HUB CENTRAL OFFICES OR CEV
OPT RX
TRANSMITTER
12
HDT
650
ATM MULTIPLEXER MODULATOR
BROADCAST VIDEO
OC-N
SUPERTRUNK
BILLING/ PROVISIONING INTERFACE
PUBLIC SWITCHED NETWORK
ATM NETWORK
652

FIG. 114

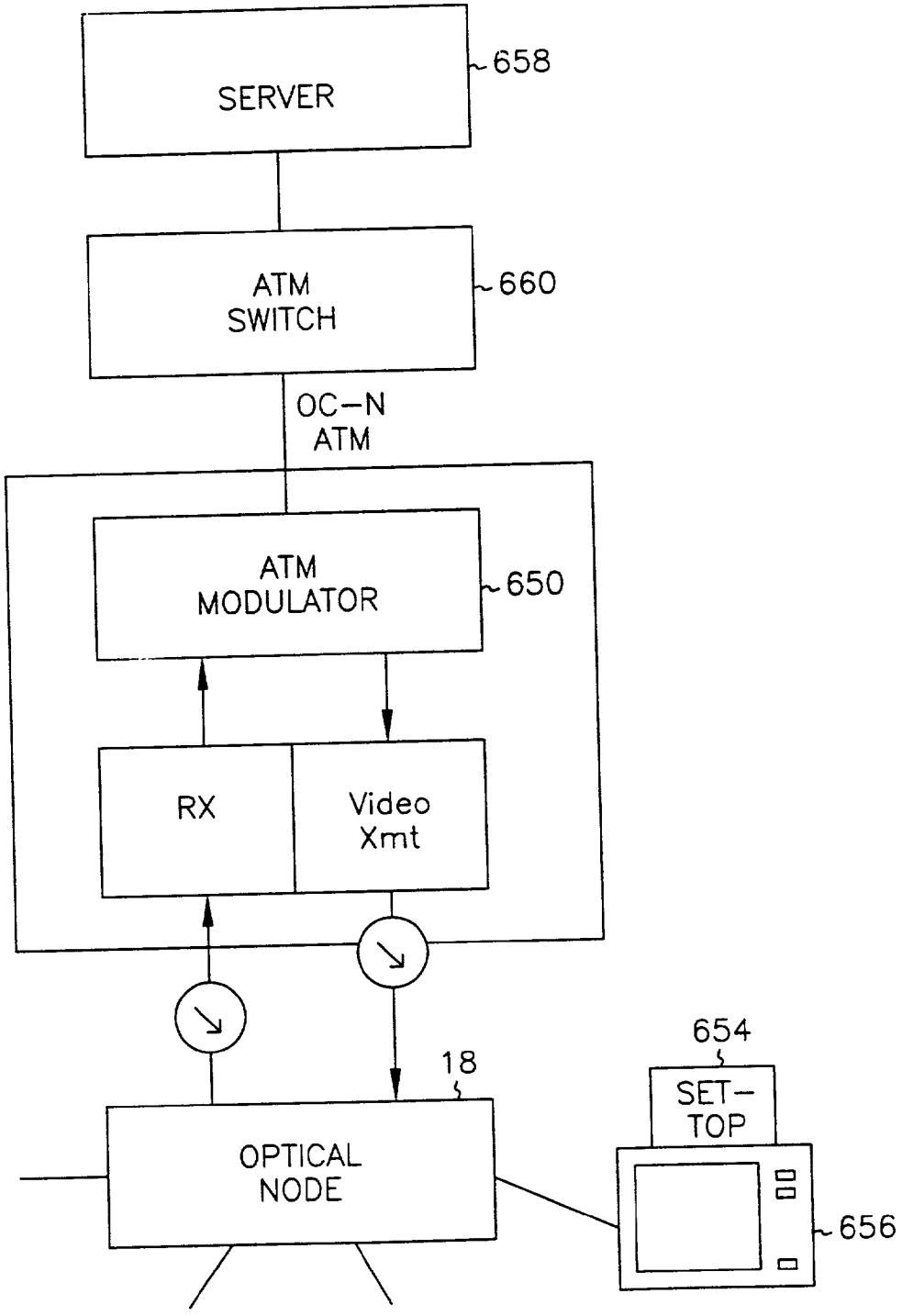
SERVER
658
ATM
SWITCH
660
OC-N
ATM
ATM
MODULATOR
650
RX
Video
Xmt
18
654
SET-
TOP
OPTICAL
NODE
656

FIG. 115

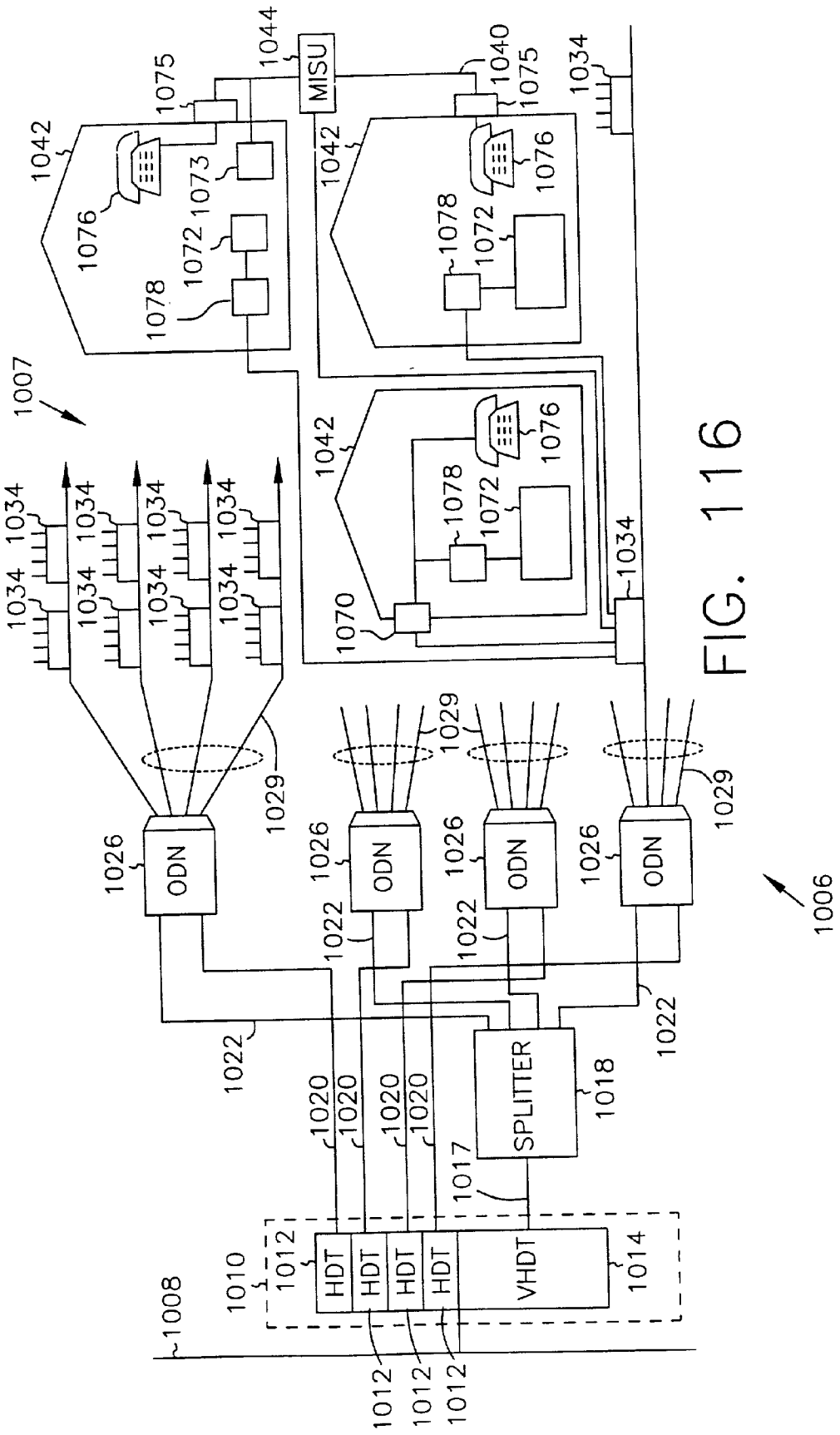
1044
MISU
1075
1040
1034
1042
1076
1073
1072
1078
1007
1070
1029
1026
ODN
1022
1020
SPLITTER
1018
1017
1010
1012
HDT
VHDT
1014
1008
1006

FIG. 116

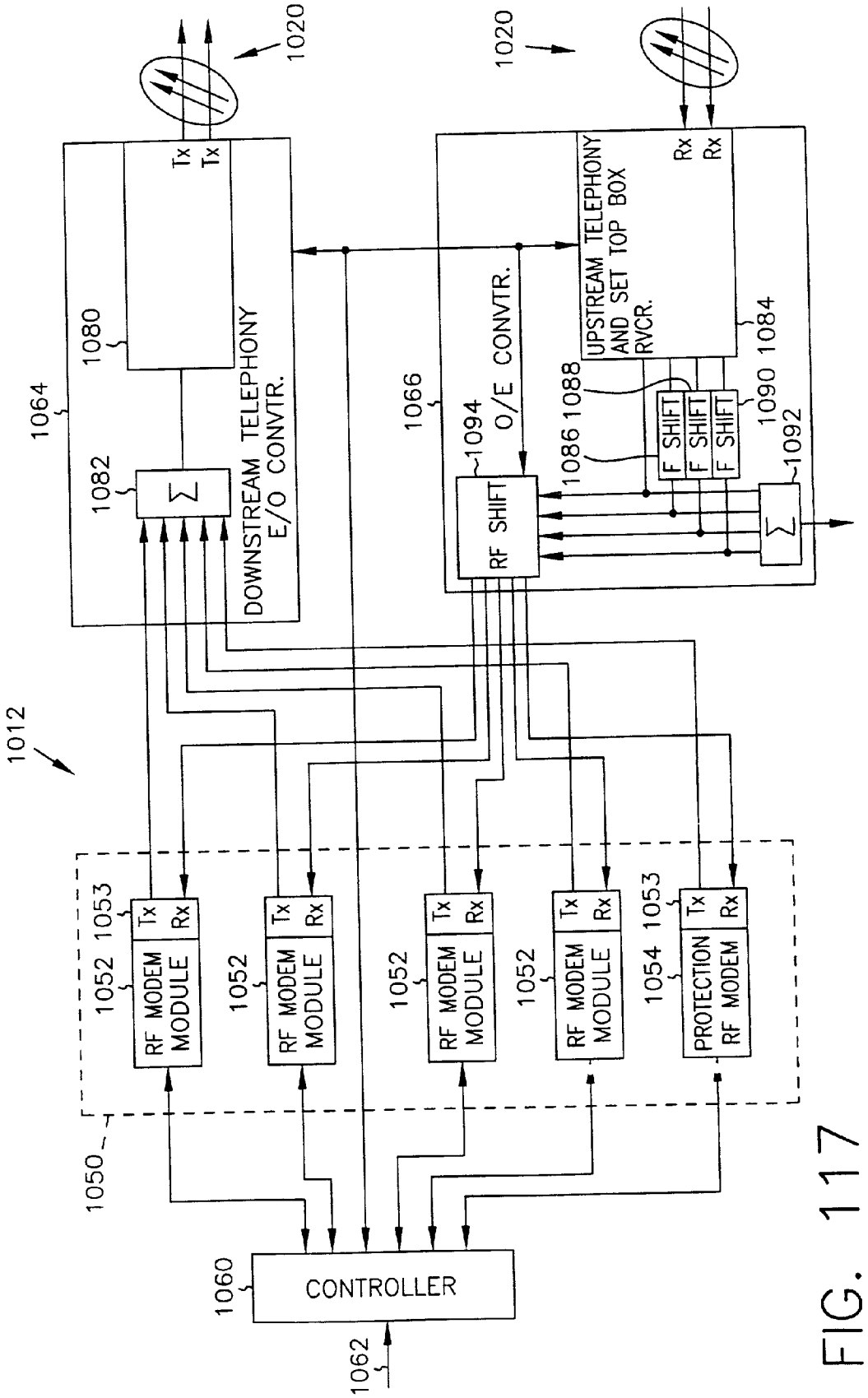
1012
1020
1020
Tx
Tx
Rx
Rx
1080
1064
1082
DOWNSTREAM TELEPHONY E/O CONVTR.
1066
1094
O/E CONVTR.
RF SHIFT
UPSTREAM TELEPHONY AND SET TOP BOX RVCR.
1084
1088
1086
1090
1092
F SHIFT
F SHIFT
F SHIFT
1050
1052
1053
1054
RF MODEM MODULE
PROTECTION RF MODEM
1060
CONTROLLER
1062

FIG. 117

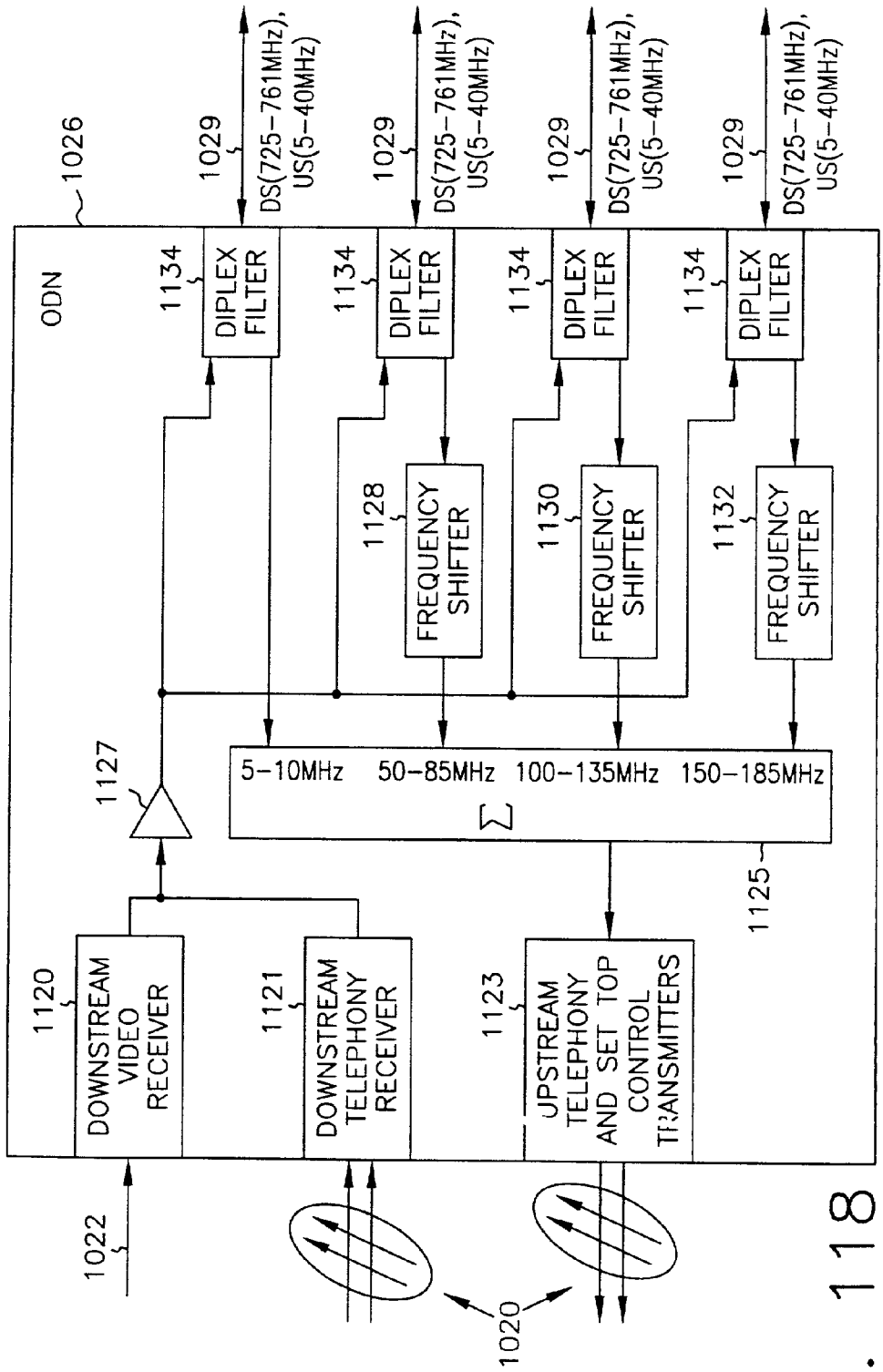
1026
ODN
1029
DS(725-761MHz), US(5-40MHz)
1134
DIPLEX FILTER
1128
FREQUENCY SHIFTER
1130
1132
1127
5-10MHz
50-85MHz
100-135MHz
150-185MHz
Σ
1125
1120
DOWNSTREAM VIDEO RECEIVER
1121
DOWNSTREAM TELEPHONY RECEIVER
1123
UPSTREAM TELEPHONY AND SET TOP CONTROL TRANSMITTERS
1022
1020

FIG. 118

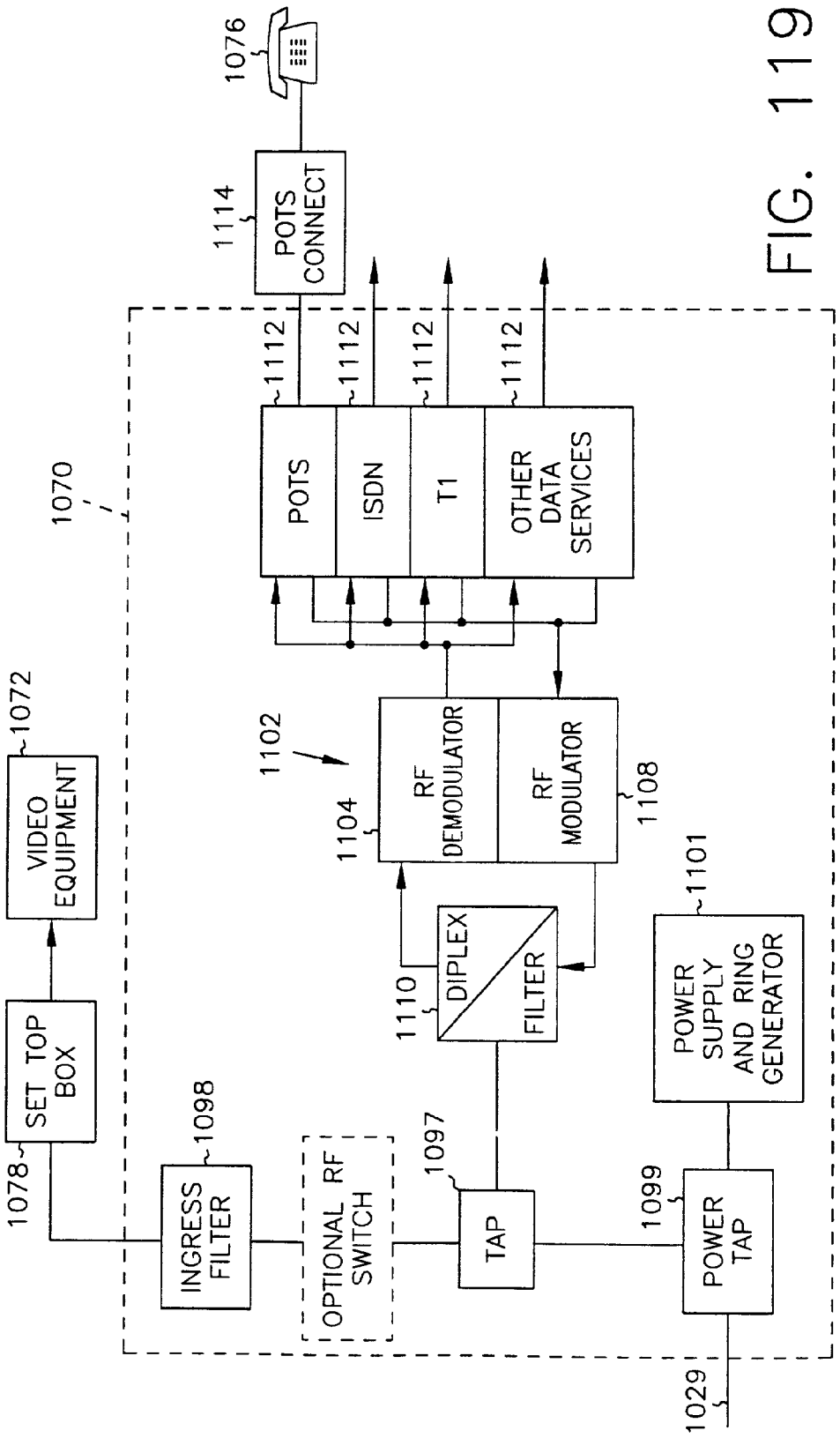
1076
1114
POTS CONNECT
1112
1112
1112
1112
POTS
ISDN
T1
OTHER DATA SERVICES
1070
1072
VIDEO EQUIPMENT
1102
1104
RF DEMODULATOR
RF MODULATOR
1108
1110
DIPLEX FILTER
1101
POWER SUPPLY AND RING GENERATOR
1078
SET TOP BOX
1098
INGRESS FILTER
OPTIONAL RF SWITCH
1097
TAP
1099
POWER TAP
1029

FIG. 119

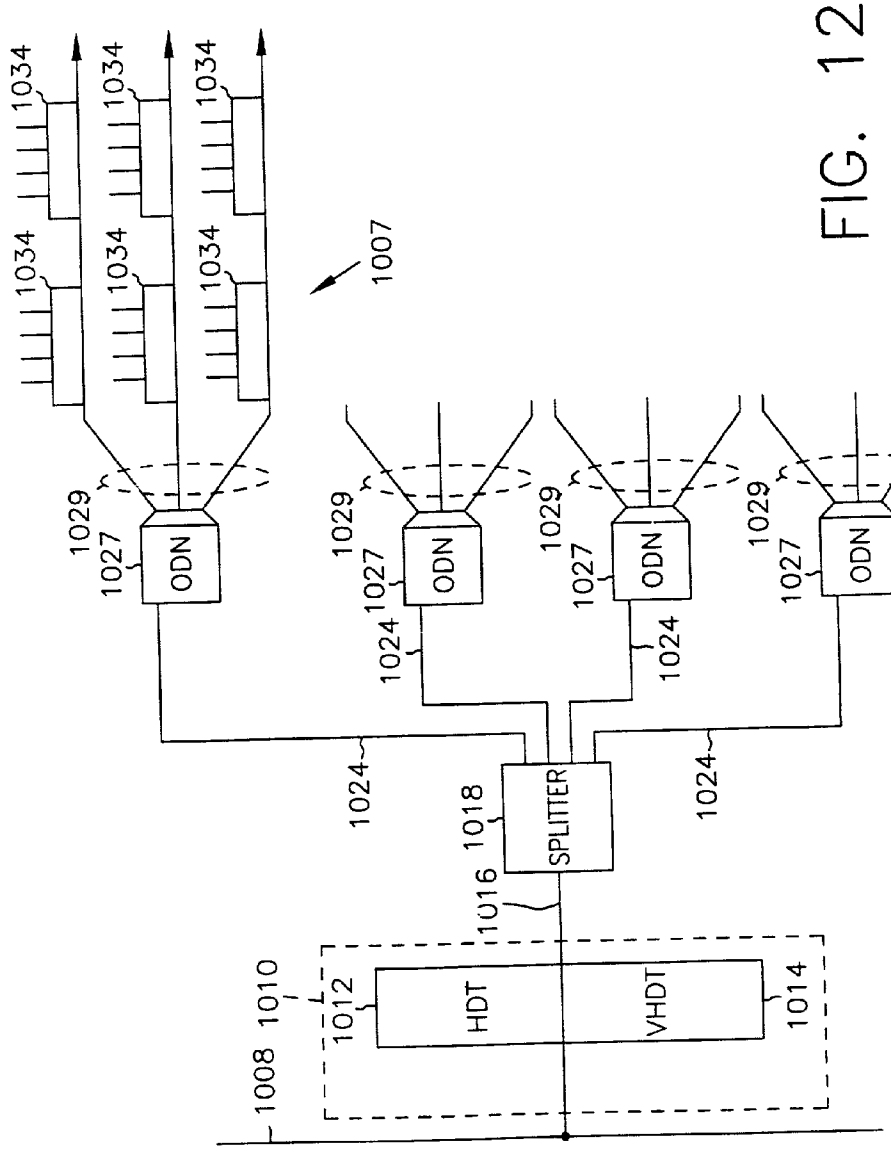
1034
1007
1029
1027
ODN
1024
1018
SPLITTER
1016
1010
1012
HDT
VHDT
1014
1008

FIG. 120

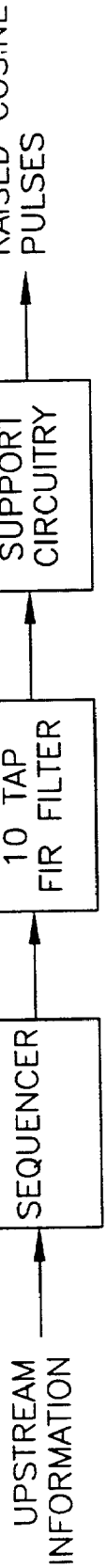
UPSTREAM INFORMATION
1301
SEQUENCER
1302
10 TAP FIR FILTER
1303
SUPPORT CIRCUITRY
RAISED COSINE PULSES

FIG. 121

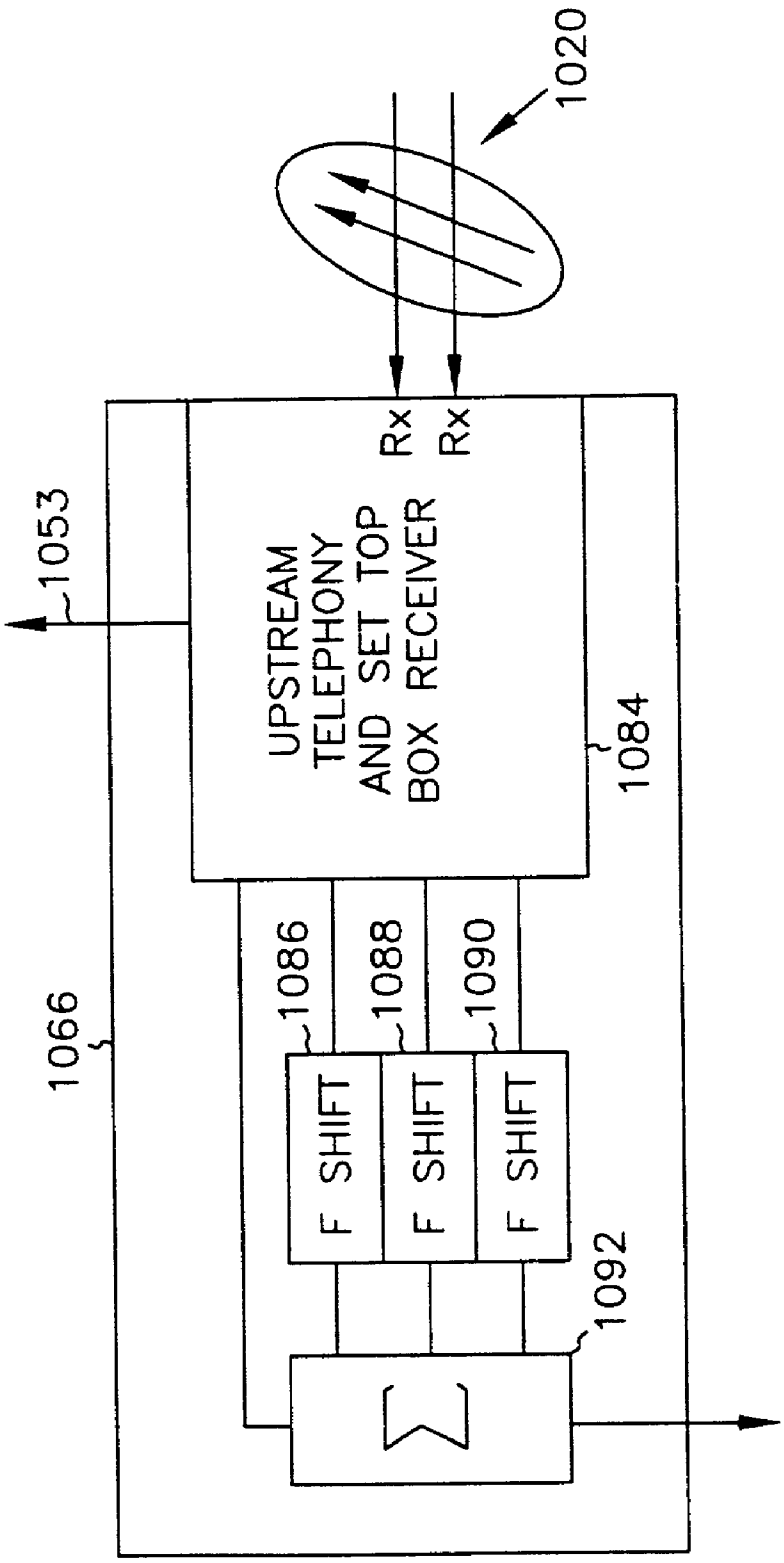
1020
Rx
Rx
1053
UPSTREAM TELEPHONY AND SET TOP BOX RECEIVER
1084
1066
1086
1088
1090
F SHIFT
F SHIFT
F SHIFT
1092

FIG. 122

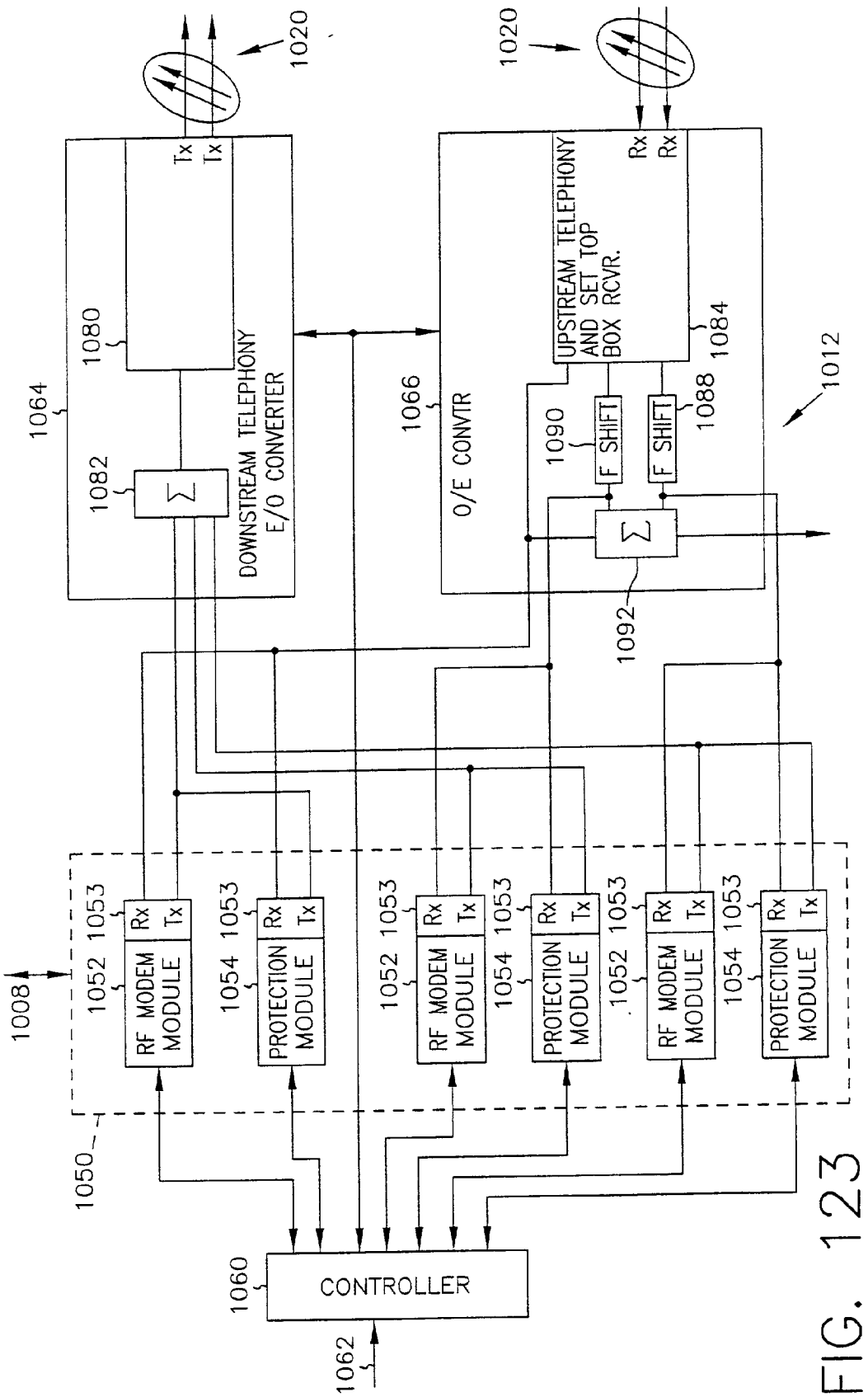
1020
1020
Tx
Tx
Rx
Rx
1064
1080
1082
DOWNSTREAM TELEPHONY E/O CONVERTER
1066
O/E CONVTR
UPSTREAM TELEPHONY AND SET TOP BOX RCVR.
1084
1088
1090
F SHIFT
F SHIFT
1012
1092
1008
1050
1052 1053
RF MODEM MODULE
1054 1053
PROTECTION MODULE
1060
CONTROLLER
1062

FIG. 123

COMPUTER DATA TRANSMISSION OVER A TELECOMMUNICTIONS NETWORK

CROSS REFERENCE TO RELATED CASES

[0001] This Application is a divisional of U.S. application Ser. No. 09/395,913 filed Sep. 15, 1999 which is a divisional of U.S. Pat. No. 6,334,219 filed Jun. 28, 1996 (pending) which is a continuation-in-part of U.S. application Ser. No. 08/650,408 filed May 20, 1996 (abandoned), which applications are incorporated by reference. This application is related to U.S. application Ser. Nos. 08/311,964 filed Sep. 26, 1994 (abandoned), 08/384,659 filed Feb. 6, 1995 (abandoned), 08/455,340 filed May 31, 1995 (abandoned), 08/455,059 filed May 31, 1995 (abandoned), 08/457,294 filed Jun. 1, 1995 (abandoned), 08/457,110 filed Jun. 1, 1995 (abandoned), 08/456,871 filed Jun. 1, 1995 (abandoned), 08/457,022 filed Jun. 1, 1995 (abandoned), and 08/457,037 filed Jun. 1, 1995 (abandoned) 08/457,295 Jun. 1, 1995 (abandoned), and 08/457,317 filed Jun. 1, 1995 (abandoned), which applications are incorporated by reference.

FIELD OF THE INVENTION

[0002] The present invention relates generally to the field of communication systems. More particularly, the present invention related to communication systems with multicarrier telephony transport.

BACKGROUND OF THE INVENTION

[0003] Two information services found in households and businesses today include television, or video services and telephone services. Another information service involves digital data transfer which is most frequently accomplished using a modem connected to a telephone service. All further references to telephony herein shall include both telephone services and digital data transfer services.

[0004] Characteristics of telephony and video signals are different and therefore telephony information occupies a relatively narrow band when compared to the bandwith for video signals. In addition, telephony signals are low frequency whereas NTSC standard video signals are transmitted at carrier frequencies greater than 50 MHz. Accordingly, telephone transmission networks are relatively narrow band systems which operate at audio frequencies and which typically serve the customer by twisted wire drops from a Kite junction box. On the other hand, cable television services are broad band and incorporate various frequency carrier mixing methods to achieve signals compatible with conventional very high frequency television receivers. Cable television systems or video services are typically provided by cable television companies through a shielded cable service connection to each individual home or business.

[0005] One attempt to combine telephony and video services into a single network is described in U.S. Pat. No. 4,977,593 to Balance entitled "Optical Communications Network." Balance describes a passive optical communications network with an optical source located in a central station. The optical source transmits time division multiplexed optical signals along an optical fiber and which signals are later split by a series of splitters between several individual fibers servicing outstations. The network allows for digital speech data to be transmitted from the outstations to the central station via the same optical path. In addition, Balance indicates that additional wavelengths could be utilized to add services, such as cable television, via digital multiplex to the network.

[0006] A 1988 NCTA technical paper, entitled "Fiber Backbone: A Proposal For an Evolutionary Cable TV network Architecture," by James A. Chiddix and David M. Pangrac, describes a hybrid optical fiber/coaxial cable television (CATV) system architecture. The architecture builds upon existing coaxial CATV networks. The architecture includes the use of a direct optical fiber path from a head end to a number of feed points in an already existing CATV distribution system.

[0007] U.S. Pat. No. 5,153,763 to Pidgeon, entitled "CATV Distribution Networks Using Light Wave Transmission Lines," describes a CATV network for distribution of broad band, multichannel CATV signals from a head end to a plurality of subscribers. Electrical to optical transmitters at the head end and optical to electrical receivers at a fiber node launch and receive optical signals corresponding to broad band CATV electrical signals. Distribution from the fiber node is obtained by transmitting electrical signals along coaxial cable transmission lines. The system reduces distortion of the transmitted broad bad CATV signals by block conversion of all or part of the broad band of CATS signals to a frequency range which is less than an octave. Related U.S. Pat. No. 5,262,883 to Pidgeon, entitled "CATV Distribution Networks Using Light Wave Transmission Lines," further describes the distortion reducing system.

[0008] Although the above-mentioned networks describe various concepts for transmitting broad band video signals over various architectures, which may include hybrid optical fiber/coax architectures, none of these references describe a cost effective, flexible, communications system for telephony communications. Several problems are inherent in such a communication system.

[0009] One such problem is the need to optimize the bandwidth used for transporting data so that the bandwidth used does not exceed the allotted bandwidth. Bandwidth requirements are particularly critical in multi-point to point communication where multiple transmitters at remote units must be accommodated such that allotted bandwidth is not exceeded.

[0010] A second problem involves power consumption of the system. The communication system should minimize the power used at the remote units for the transport of data, as the equipment utilized at the remote units for transmission and reception may be supplied by power distributed over the transmission medium of the system.

[0011] Another problem arises from a fault in the system preventing communication between a head end and multiple remote units of a multi-point to point system. For example, a cut transmission line from a head end to many remote units may leave many users without service. After the fault is corrected, it is important bring as many remote units back into service as quickly as possible.

[0012] Data integrity must also be addressed. Both internal and external interference can degrade the communication. Internal interference exists between data signals being transported over the system. That is, transported data signals over a common communication link may experience interference therebetween, deceasing the integrity of the data.

Ingress from external sources can also effect the integrity of data transmissions. A telephony communication network is susceptible to "noise" generated by external sources such as HAM radio. Because such noise can be intermittent and vary in intensity, a method of transporting data over the system should correct or avoid the presence of such ingress.

[0013] These problems and others as will become apparent from the description to follow, present a need for an enhanced communication system. Moreover, once the enhanced system is described, a number of practical problems in its physical realization are presented and overcome.

[0014] Another embodiment provides a method and apparatus for a fast Fourier transform. This invention relates to the field of electronic communication systems, and more specifically to an improved method and apparatus for providing a fast Fourier transform ("FFT").

[0015] There are many advanced digital signal-processing applications requiring analysis of large quantities of data in short time periods, especially where there is interest in providing "real time" results. Such applications include signal processing in modems which use OFDM (orthogonal frequency division multiplexing). In order to be useful in these and other applications, Discrete Fourier Transform (DFT) or Fast Fourier Transform (FFT) signal processors must accommodate large numbers of transforms, or amounts of data, in very short processing times, often called high data throughput.

[0016] In addition to the speed and data-throughput requirements, power consumption is a major concern for many applications. In some signal-processing applications, power is supplied by portable generation or storage equipment, such as batteries, where the ultimate power available is limited by many environment. In such applications, processor power consumption must be as low as possible. One useful measure of utility or merit for FFT processors is the energy dissipation per transform point. Ultimately, one key problem with any FFT processor is the amount of power consumed per transform. Generally, high-performance, efficient FFT processor exhibit energy dissipations per transform in the range of 100 to 1000 times $\log_2 N$ nanojoules, where N is the number of points in a given transform. As a consequence, reasonably large transforms required to process large arrays of data, result in large power consumption.

[0017] Machine-implemented computation of an FFT is often simplified by cascading together a series of simple multiply-and-add stages. When a cursive process is used, data circulates through a single stage and the computational structure of the stage is made variable for each circulation. Each circulation through the stage is referred to as a "pass".

[0018] A plurality of computational elements, each known as a radix-r butterfly, may be assembled to define a single stage for carrying out a particular pass. A radix-r butterfly receives r input signals and produces a corresponding number of r output signals, where each output signal is the weighted sum of the r input signals. The radix number, r, in essence, defies the number of input components which contribute to each output component.

[0019] By way of example, a radix-2 butterfly receives two input signals and produces two output signals. Each output signal is the weighted sum of the two input signals. A radix-4 butterfly receives four input signals and produces four corresponding output signals. Each output signal of the radix-4 butterfly constitutes a weighted sum of the four input signals.

[0020] Completion of an N-point Fast Fourier Transform (FFT) requires that the product of the butterfly radix values, taken over the total number of stages or passes, equals the total point count, N. Thus, a 64-point FFT can be performed by one radix-64 butterfly, or three cascaded stages where each stage has sixteen radix-4 butterflies (the product of the radix values for stage-1 and stage-2 and stage-3 is 4×4×4=64), or six cascaded stages where each of the six stages comprises 32 radix-2 butterflies (the product of the radix values for stage-1 through stage6 is 2×2×2×2×2×2=64).

[0021] A multi-stage or multi-pass FFT process can be correctly carried out under conditions where the number of butterfly elements changes from one pass (or stage) to the next and the radix value, r, of the butterfly elements also changes from one pass (or stage) to the next. A paper by Gordon DeMuth, "ALGORITHMS FOR DEFINING MIXED RADIX FFT FLOW GRAPHS", IEEE Transactions on Acoustics, Speech, and Signal Processing, Vol 37, No. 9, September 1989, Pages 1349-1358, describes a generalized method for performing an FFT with a mixed-radix system. A mixed-radix system is one where the radix value, r, in one stage or pass is different from that of at least one other stage or pass.

[0022] An advantage of a mixed-radix computing system is that it can be "tuned" to optimize the signal-to-noise ratio of the transform (or more correctly speaking, to minimize the accumulated round-off error of the total transform) for each particular set of circumstances. By way of example, it is advantageous in one environment to perform a 512-point FFT using the mixed-radix sequence: 4,4,4,4,2. In a different environment, it may be more advantageous to use the mixed-madix sequence: 4, 2, 4, 4, 4. Round-off error varies within a machine of finite precision as a function of radix value and the peak signal magnitudes that develop in each stage or pass.

[0023] In addition, it may be advantageous to scale intermediate results between each stage or pass, in order to minimize round-off errors and the problem of overflow. Further, it may be advantageous to vary the amount of scaling performed between each pass, e.g., either to scale by ¼ between each radix-4 stage or to scale by ½ for some stages and ⅛ for other stages.

[0024] Heretofore, FFT processors generally fetched data values from their working storage in a serial manner, thus limiting the speed which could be obtained. Further, current FFT processors generally were limited in speed by loading the working storage with input values, then processing the data in the working storage, then unloading the result values.

[0025] There are many advanced digital signal-processing applications requiring analysis of large quantities of data in short time periods, especially where there is interest in providing "real tune" results. Such applications include signal processing in modems which use OFDM (orthogonal frequency division multiplexing).

[0026] One need in the art is for an accurate analog-to-digital conversion (ADC) at moderate frequencies having limited bandwidth. One technology known in the art is the "Sigma-Delta" ADC which provides very good resolution

(high number of bits in the digital result), but only for signals whose converted signal bandwidth is low.

[0027] Another need is for an ADC which provides bandwidth-limited digital I and Q signals (representing amplitude and quadrature) for a 200 kHz bandwidth received analog modem signal, wherein the digital result has very high resolution and accuracy.

[0028] What is needed is a method and apparatus which addresses the above problems in the art.

SUMMARY OF THE INVENTION

[0029] The present invention describes a multi-point to point communication system including multicarrier telephony transport. The multi-point to point communication system includes a hybrid fiber/coax distribution network. A head end terminal provides for downstream transmission of downstream control data and downstream telephony information in a first frequency bandwidth over the hybrid fiber/coax distribution network and reception of upstream telephony information and upstream control data in a second frequency bandwidth over the hybrid fiber/coax distribution network. The head end terminal includes a head end multicarrier modem for modulating at least downstream telephony information on a plurality of orthogonal carriers in the first frequency bandwidth and demodulating at least upstream telephony information modulated an a plurality of orthogonal carriers in the second frequency bandwidth. The head end terminal further includes a head end controller operatively connected to the head end multicarrier modem for controlling transmission of the downstream telephony information and downstream control data and for controlling receipt of the upstream control data and upstream telephony information. The system further includes at least one service unit, each service unit associated with at least one remote unit and operatively connected to the hybrid fiber/coax distribution network for upstream transmission of upstream telephony information and upstream control data in the second frequency bandwidth and for receipt of the downstream control data and downstream telephony information in the first frequency bandwidth. Each service unit includes a service unit multicarrier modem for modulating at least the upstream telephony information on at least one carrier orthogonal at the head end to a least one other carrier in the second frequency bandwidth and for demodulating at least the downstream telephony information modulated on at least a band of a plurality of orthogonal carriers in the first frequency bandwidth. Each service unit also includes a service unit controller operatively connected to the service unit multicarrier modem for controlling the modulation of and demodulation performed by the service unit multicarrier modem.

[0030] Another embodiment prevents untoward special effects in the multicarrier signal from variations in channel activity and from highly repetitive data patterns in the payload channels. Data is the payload channels can be scrambled with pseudorandom sequences, and different sequences can be applied to different channels in order to produce a more balanced multicarrier spectrum.

[0031] In another embodiment, the plurality of orthogonal carriers in the first frequency bandwidth include at least one control channel for transmission of downstream control data and a plurality of telephony information channels for transmission of downstream telephony information. Further, the plurality of orthogonal carriers in the second frequency bandwidth include at least one control channel for transmission of upstream control data and a plurality of telephony information channels for transmission of upstream telephony information.

[0032] In other embodiments, a plurality of control channels are interspersed among the telephony information channels in the first frequency bandwidth and a plurality of control channels are interspersed among the telephony channels of the second frequency bandwidth. The telephony channels may be divided into subbands each having multiple data or payload channels and a control channel; this allows the remote modems to be realized as less expensive and/or better performing narrow-band modems.

[0033] The clock signals for generating the carriers and the symbols representing the transmitted data may be locked to each other or generated from the same source, to reduce intersymbol interference significantly.

[0034] Another technique for reducing intersymbol interference is the transmission of each symbol with more than 360° of phase in one cycle of its carrier, in order to allow some leeway in tracking the phase of a channel carrier in a receiving modem.

[0035] Some applications demand more or different error detection and correction capability than others. An embodiment is shown which handles both unencoded parity-type detection/correction and more multiple types of more powerful methods, such as Reed-Solomon encoding, in a transparent, real-time fashion, by packing the data words differently for each case. Moreover, the processor loading involved in these error-correction techniques can be spread out in time, so that not all channels need to be handled at the same time. This is accomplished by staggering the beginning times of different data messages.

[0036] In another embodiment, the at least one service unit includes a service modem for upstream transmission of upstream telephony information and upstream control data within a channel band of the second frequency bandwidth corresponding to one of the channel bands of the first frequency bandwidth in which the service modem receives downstream telephony information and downstream control information. Alternatively, the at least one service unit includes a multi-service modem for upstream transmission of upstream telephony information and upstream control data within a plurality of channel bands of the second frequency bandwidth corresponding to a plurality of the channel bands of the first frequency bandwidth in which the multi-service modem receives downstream telephony information and downstream control information.

[0037] In still another embodiment, the plurality of control channels of the first frequency bandwidth and the plurality of control channels of the second frequency bandwidth each include at least one synchronization channel.

[0038] In other embodiments, different modulation techniques are utilized for different carriers. For example, different modulation techniques are utilized for different telephony channels. As another example, the aforementioned IOC channels may be modulated as differential binary phase-shift keyed (BPSK) signals, while the payload data channels are modulated as 5-bit quadrature amplitude modu-

lated (QAM32) signals, in order to enhance the use of IOC channels for subband tracking, and for other purposes. The constellation defining the modulated signals can be constructed to achieve a minimal number of bit errors for small errors in amplitude or phase of the received signal; broadly, the constellation points are mapped to bit combinations in a scheme analogous to a Gray code.

[0039] A communication system which addresses the problems inherent in the system, in particular, ingress problems is also described. The communication system includes a distribution network between a head end terminal and at least one remote unit. The head end terminal receives upstream telephony information and upstream control data in a frequency bandwidth over the distribution network. The head end terminal includes a head end multicarrier demodulator for demodulating at least upstream telephony information modulated on a plurality of orthogonal carriers in the frequency bandwidth. The demodulator includes at least one polyphase filter for filtering the at least upstream telephony information modulated on the plurality of orthogonal carriers to provide ingress protection for the modulated orthogonal carriers. The head end terminal also includes a head end controller operatively connected to the head end multicarrier demodulator for controlling receipt of the upstream control data and upstream telephony information. The system further includes at least one service unit modulator, each service unit modulator associated with at least one remote unit and operatively connected to the distribution network for modulating at least upstream telephony information on at least one carrier orthogonal at the head end terminal to at least one other carrier in the frequency bandwidth. The system also includes a service unit controller operatively connected to the service unit multicarrier modulator for controlling the modulation performed by the service unit multicarrier modulator.

[0040] In another embodiment, the plurality of orthogonal carriers in the frequency bandwidth include a plurality of telephony information channels for transmission of upstream telephony information after modulation of telephony information thereon and at least one control channel associated with the plurality of telephony channels for transmission of upstream control data thereon. Here also, the IOC may be placed in the midpoint of the subbands.

[0041] In another embodiment, the at least one polyphase filter includes a first and second polyphase filter. The first polyphase filter filters a first plurality of channel sets and passes a first plurality of at least telephony channels within each channel set of the first plurality of channel sets. The second polyphase filter filters a second plurality of channel sets and passes a second plurality of at least telephony channels within each channel set of the second plurality of channel sets. The first and second polyphase filter are offset from one another such that all at least telephony channels of the first and second plurality of channel sets are passed. In another embodiment, the polyphase filters include at least two overlapping polyphase filters.

[0042] In another alternate embodiment, the demodulator includes a tunable notch filter for filtering the at least upstream telephony information modulated on a plurality of orthogonal carriers to prevent passage of corrupted modulated orthogonal carriers.

[0043] In addition, a method of polyphase filtering in a communication system is also described. The method includes receiving a plurality of orthogonal carriers having modulated telephony information thereon. The plurality of orthogonal carriers include a first and second plurality of noncontiguous channel sets. The first plurality of noncontiguous channel sets are filtered and a first plurality of channels of each channel set of the first plurality of noncontiguous channel sets are passed. The second plurality of noncontiguous channel sets are filtered and a second plurality of channels of each channel set of the second plurality of noncontiguous channel sets are also passed. The second plurality of channels passed include channels of the first plurality of noncontiguous channel sets not passed when filtering the first plurality of noncontiguous channel sets.

[0044] A receiver apparatus is also described which receives a frequency bandwidth having a plurality of modulated orthogonal carriers. At least one polyphase filter provides ingress protection for the frequency bandwidth by filtering a plurality of channel sets of the modulated orthogonal carriers.

[0045] The use of channel monitoring to address some of the problems inherent in a multi-point to point communication system, in particular, with respect to ingress, is also described. The monitoring method of the present invention monitors a telephony communication n-bit channel wherein one of the bits is a parity bit. The parity bit of the n-bit channel is sampled and a probable bit error rate is derived from the sampling of the parity bit.

[0046] In one embodiment, the probable bit error rate over a time period is compared to a predetermined bit error rate value representing a minimum bit error rate to determine if the n-bit channel is corrupted. A corrupted channel can then either be reallocated or, in another embodiment, the transmission power of the channel can be increased to overcome the corruption.

[0047] In an alternate method embodiment, the method comprises the steps of sampling the parity bit of the n-bit channel over a first time period, deriving a probable bit error rate from the sampling of the parity bit over the first time period, comparing the probable bit error rate over the first time period to a pre-determined bit error rate value to determine if the n-bit channel is corrupted, and accumulating a probable bit error rate over a plurality of successive time periods if the n-bit channel is not corrupted.

[0048] In another alternate method embodiment, the method comprises the steps of sampling the parity bit of the n-bit channel and deriving a probable bit error rate from the sampling of the parity bit over a first time period. The probable bit error rate over the first time period is compared to a first predetermined bit error rate value to determine if the n-bit channel is corrupted. A probable bit error rate from the sampling of the parity bit over a second time period is derived. The second tine period is longer than the first time period and runs concurrently therewith. The probable bit error rate over the second time period is compared to a second predetermined bit error rate value to determine if the n-bit channel is corrupted.

[0049] In yet another alternate embodiment, a method for monitoring at least one telephony communication channel includes equalizing a signal on the channel and monitoring the equalization of the signal to produce a probable bit error rate as a function of the equalizaion.

[0050] In still yet another alternate embodiment, a method for monitoring at least one unallocated telephony communication channel includes periodically monitoring the at least one unallocated telephony communication channel. Error data for the at least one unallocated telephony communication channel accumulated and the at least one unallocated telephony communication channel is allocated based on the error data.

[0051] A multi-point to point communication system utilizing a distributed loop method is also described. The communication system in accordance with the present invention includes a distribution network and a head end terminal for downstream transmission of downstream control data and downstream telephony information in a first frequency bandwidth over the distribution network. The head end terminal receives upstream telephony information and upstream control data in a second frequency bandwidth over the distribution network. The head end terminal further includes a head end multicarrier modem for modulating at least downstream telephony information on a plurality of orthogonal carriers in the first frequency bandwidth and demodulating at least upstream telephony information modulated on a plurality of orthogonal carriers in the second frequency bandwidth. A head end controller is operatively connected to the head end multicarrier modem for controlling transmission of the downstream telephony information and downstream control data and for controlling receipt of the upstream control data and upstream telephony information. The system includes a plurality of service units. Each service unit is associated with at least one remote unit and operatively connected to the distribution network for upstream transmission of upstream telephony information and upstream control data in the second frequency bandwidth and for receipt of the downstream control data and downstream telephony information in the first frequency bandwidth. Each service unit includes a service unit multicarrier modem for modulating at least the upstream telephony information on at least one carrier orthogonal to at least one other carrier in the second frequency bandwith and for demodulating at least the downstream telephony information modulated on at least a band of a plurality of orthogonal carriers in the first frequency bandwidth. Each service unit also includes a service unit controller operatively connected to the service unit multicarrier modem for controlling the modulation of and demodulation performed by the service unit multicarrier modem. The service unit controller adjusts at least one local transmission characteristic in response to an adjustment command from the head end controller transmitted in the downstream control data to the at least one remote unit. The head end controller further includes a detector for detecting the at least one local transmission characteristic of the service unit modem associated with the at least one remote unit and for generating the adjustment command as a function of the detected at least one transmission characteristic for transmittal to the service unit associated with the at least one remote unit in the downstream control data.

[0052] Distributed system control is also employed for acquiring and tracking remote service units newly connected to (or activated within) the system. An acquisition process makes rough estimates of the frequency, phase, and data-symbol timing of the head-end transmitter, calculates the round-trip delay of data to and from the head end, and then tracks changes in the frequency, phase, and timing of the head end, all with minimal overhead to the transmission of payload data within the system. A special non-valid data signal is used to signal the start of a training pattern for acquisition purposes. Maintaining accurate power balancing or leveling among the remote units transmitting upstream to the head end is both necessary and difficult in a multipoint-to-point multicarrier system. One embodiment of the invention uses both an automatic gain control or equalizer at the head end and a transmitter output or power control at the remote end to achieve the conflicting goals of wide dynamic range and high resolution amplitude control.

[0053] Furthermore, communication system having a distribution network between a head end and a plurality of remote units using a scanning method is described. The system includes the transmission, from the head end, of a plurality of modulated orthogonal carriers having telephony information modulate thereon in a plurality of regions of a first frequency bandwidth. Each of the regions has at least one control channel associated therewith having control information modulated thereon. A scanner at the remote units, scans each of the plurality of regions in the first frequency bandwidth and locks onto the at least one control channel associated with each of the plurality of regions to detect a unique identifier to determine which region of the first frequency bandwidth the remote unit is to tune to and which region in a second frequency bandwidth the remote unit is to transit within.

[0054] In another embodiment, the communication system includes a distribution network between a head end and a plurality of remote units. The head end includes a head end terminal for downstream transmission of downstream control data and downstream telephony information in a first frequency bandwidth over the distribution network and for receipt of upstream telephony information and upstream control data in a second frequency bandwidth over the distribution network The head end terminal includes a head end multicarrier modem for modulating at least downstream telephony information on a plurality of orthogonal carriers in a plurality of regions of the first frequency bandwidth. The head end multicarrier modem also demodulates at least upstream telephony information modulated on a plurality of orthogonal carriers of a plurality of regions in the second frequency bandwidth. The plurality of orthogonal carriers in each of the regions includes a plurality of telephony information channels for transmission of telephony information thereon with each of the regions having at least one control channel associated therewith for transmission of control data. The head end terminal also includes a head end controller operatively connected to the head end multicarrier modem for controlling transmission of the downstream telephony information and downstream control data and for controlling receipt of the upstream control data and upstream telephony information. The system further includes a plurality of service unit modems with each service unit modem associated with at least one remote unit and operatively connected to the distribution network for upstream transmission of upstream telephony information and upstream control data in one of the plurality of regions of the second frequency bandwidth and for receipt of the downstream control data and downstream telephony information in one of the plurality of regions in the first frequency bandwidth. Each service unit modem includes a scanner for scanning each of the plurality of regions in the first frequency bandwidth and for locking onto the at least one

control channel in each of the plurality of regions to detect a unique identifier for each service unit modem to determine which region of the first frequency bandwidth the service unit modem is to tune to and which region in the second frequency bandwidth the service unit modem is to transmit within.

[0055] This invention further provides a three-part RAM structure, the functions of which can be permuted between input, conversion, and output functions. In one embodiment, the conversion RAM section is configured to offer four values to be accessed simultaneously in order to speed operations.

[0056] In another embodiment, this invention relates to the field of electronic communication systems, and more specifically to an improved method and apparatus for providing a Sigma-Delta analog-to-digital conversion and decimation for a modem.

[0057] According to another aspect of the invention there is provided a data delivery system having a head end connected to a plurality of remote subscribers over a network, the data originating from general purpose digital computers, wherein the data is transmitted to the remote subscribers in a plurality of data channels, and at the start of a data transmission session, one or more channels are selectively assigned to carry the data between the head end and the subscriber premises with each of the data channels maintaining a substantially constant rate of data transfer between the head end and the destination premise. The system and method further allows that the number of assigned channels assigned to a particular subscriber can be changed from one connection to another to accommodate changes in overall system loading, but at all times maintaining a minimum number of assigned channels so that a minimum rate of data transfer can be maintained between the head end and a subscriber premise. The system also provides asymmetrical operation so that the number of data channels assigned in the downstream path from the head end to the subscribers is much greater in number than the number of upstream data channels.

[0058] According to another aspect of the invention there is provided a system of computer data and telephony data transmission over a telecommunications network having a head end connected to a plurality of remote subscribers, the computer data originating from general purpose digital computers, and the telephony data received from or conveyed to the public telephone network. The system comprises transmitting the computer data and telephony data to the remote subscribers in a plurality of data channels, and establishing a computer data or telephony data connection between the head end and a subscriber premise independently of one another. Each of the computer data or telephony data connections are established by assigning one or more of the data channels to carry the computer data and one or more of the data channels to carry the telephony data with at least some of the data channels being available to carry either computer data or telephony data. The system further allows that the number assigned data channels can be changed from one connection to another to the same subscriber so that the overall bandwidth of the network can be reallocated.

[0059] The system further allows that the data channels use transmitted using Radio Frequency (RF) signaling, and that the RF is scrambled, thereby providing data security.

[0060] According to yet another aspect of the invention, the system allows that a computer data received at the head end can initiate a connection to a remote subscriber, wherein the connection compromises the assignment of one or more data channels to carry the computer data to the subscriber.

[0061] According to yet another embodiment, the system **10** or **500** of the present invention includes an ATM modulator which can receive ATM data and modulate it onto the HFC network. In one preferred embodiment, digital video data is delivered over an ATM network, multiplexed and modulated onto the HFC in RF digital OFDM format on data connections established between the head end and a subscriber, as for example described above with respect to system **500**. A digital set top box receives the digital video, for example in 4.0 Mbps MPEG or equivalent, and converts it to video for display on a television. A return path over a telephony or data channel allows for interactive digital video.

[0062] In another embodiment, a method for transmitting data over a telecommunication system from a head end to a service unit is provided. The service unit is assigned to subband of a transmission channel of the telecommunication system. The subband includes a number of payload channels that transmit data at a first rate and a control channel that transmits data at a second rate. The second rate is slower than the first rate. The system receives a request to transmit data to a service unit at the second, slower rate. The system further determines whether to transmit the data at the first, faster, rate based on the size of the data. When a payload channel in the subband is available to transmit the data at the first rate, the system allocates the payload channel to transmit the data to the service unit over the payload channel at the first rate. When the payload channels are allocated to service units and at least one of the allocated payload channels is idle, the system allocates the idle payload channel to transmit the data to the service unit over the payload channel at the first rate. This method can be used to download software and transmission protocols as well as other data that is not time sensitive. Further, the method advantageously provides flexibility in providing bandwidth for transmission of data in the telecommunications system.

[0063] In another embodiment, a telecommunications system dynamically allocates bandwidth among a plurality of service units. The system comprises a head end that transmits data over a transmission medium to the service units. The head end includes a modem circuit for narrow band transmission in at least one transmission channel. Each transmission channel includes a number of subbands having a number of payload channels and a control channel in each subband. Further, a control circuit in the head end assigns each service unit to a subband for transmission and receipt of data. The control circuit also allocates a payload channel to a service unit in response to a request for bandwidth for a service unit.

[0064] In another embodiment, the control circuit assigns a number of service units to each subband. The control circuit dynamically allocates bandwidth to the service units for selective use of the payload channels in the subband. This increases the number of service units that can be coupled to the system.

[0065] In another embodiment, a method for dynamically allocating bandwidth to a service unit in a telecommunica-

tions system is provided. The system uses a multi-channel transmission scheme with transmission channels that include a number of subbands. Each subband further includes a number of payload channels. The method begins by receiving a request for a payload channel for a service unit that is assigned to a first subband. The method selects an available payload channel in the first subband and determines if the payload channel is acceptable for providing service to the service unit, e.g., acceptable transmission quality. When the payload channel is acceptable, the method allocates the payload channel to the service unit. When, however, the payload channel is unacceptable, the method selects other channels to find an acceptable payload channel.

[0066] In another embodiment, a telecommunications system implements a method for allocating payload channels for a service that use multiple payload channels to communicate with a service unit. The system assigns an identifier for each payload channel that indicates the relative order of the multiple payload channels for the service. The system further monitors the quality of the payload channels of the system. When the quality of one of the multiple payload channels drops below a threshold, the system allocates a different payload channel to replace the original payload channel for the service. Once reallocated the system uses the identifier for the original payload channel so that the proper order for the allocated payload channels is maintained by the service irrespective of the order that the payload channels are received at the service unit.

[0067] In another embodiment, a telecommunications system provides a method for using an upstream payload channel to inform the head end of errors that occur in downstream payload channels. The system, monitors a downstream transmission channel at a service unit for transmission errors. Further, the system generates a signal at the service unit that indicates mission errors in the downstream payload channel. The system also transmits the signal to the head end on an associated upstream payload channel thus allowing the head end to monitor and respond to the performance of the service unit and associated payload channels.

[0068] In another embodiment, a method for controlling a plurality of service units in a telecommunication system is provided. The method first assigns an identifier to each service unit. The method further assigns each service unit to a subband of a transmission channel of a narrow band transmission scheme. In the transmission channel, each subband includes a control channel for receiving and transmitting control signals. The method broadcasts the control signals for the service units over the control channels. The method identifies the terminal to use the control signal with the identifier.

[0069] In another embodiment, a service unit for use with a communication system transmits signals with a narrow band transmission scheme. The transmission channel is divided into a number of subbands with each subband including a number of payload channels and a control channel. The service unit includes a modem that is tunable to receive telephony and control signals on a subband of a transmission channel. The service unit further includes a controller circuit coupled to the modem to receive control signals over the control channel and to determine which control signals to use to control the operation of the modem. The service unit also includes interface circuits coupled to the controller for providing signals to a channel unit.

[0070] In another embodiment, a method for controlling power usage at a service unit of a telecommunications system is provided. The method comprises determining the type of service supported by each line of a service unit. When the service unit supports analog telephony service, the method determines the hook status of all of the lines of the service unit. When the lines are on-hook, the method powers down the service units to conserve power usage until a request is received to use a line of the service unit.

[0071] The present invention describes a method of establishing communication between a head end and a plurality of remote units in a multi-point to point communication system, such as when a fault as described above has left many users of the system without service. The method includes transmitting information from the head end to the plurality of remote units in a plurality of regions of a first frequency bandwidth. Each of the regions has at least one control channel associated therewith. The information transmitted includes identification information corresponding to each of n remote units of the plurality of remote units. Such information is periodically transmitted for the n remote units from the head end on the at least one control channel of one of the plurality of regions of the first frequency bandwidth during a first predetermined time period. The identification information for each of the plurality of n remote units is transmitted out of phase with respect to the identification information for the other of the n remote units. At each of the n remote units, the at least one control channel of each of the plurality of regions in the first frequency bandwidth is scanned to detect identification information corresponding to each of the n remote units to identify a particular region of the plurality of regions that each of the n remote units is to use for receiving information from the head end.

[0072] In one embodiment, a region is identified in a second frequency bandwidth in which each of the n remote units is to transmit within. The method further includes serially performing synchronization for each of the n remote units for communication with the head end, during a second predetermined time period after the first predetermined time period.

[0073] A multi-point to point communication system having a distribution network between a head end and a plurality of remote units for accomplishing the above method includes means for transmitting information from the head end to the plurality of remote units in a plurality of regions of a first frequency bandwidth. Each of the regions has at least one control channel associated therewith. The transmitting means further periodically transmits identification information corresponding to each of a set of n remote units of the plurality of remote units on at least one control channel of one of the plurality of regions of the first frequency bandwidth during a first predetermined time period of an identification and synchronization time period. The identification information for each of the plurality of n remote units is transmitted out of phase with respect to the identification information for the other of the n remote units. The system further includes at each of the n remote units, menu for scanning the at least one control channel of each of the plurality of regions in the first frequency bandwidth to detect identification information during the first predeter-

mined time period corresponding to each of the n remote units to identify a particular region of the plurality of regions that each of the n remote units is to use for receiving information from the head end. Further, at each of the n remote units, the system includes means for modulating at least upstream telephony information on at least one carrier in a second frequency bandwidth orthogonal at the head end terminal to at least one other carrier in the second frequency bandwidth and for adjusting at least one local transmission characteristic in response to an adjustment command from the head end. Means at the head end for detecting the at least one local transmission characteristic of each of the n remote units and for generating the adjustment commands as a function of the detected at least one transmission characteristic for transmittal to the n remote units to serially perform synchronization for each of the n remote units during a second predetermined time period of the identification and synchronization time period is also included in the system.

[0074] The present invention is a hybrid fiber/coax video and telephony communication network which integrates bidirectional telephony and interactive video services into one network including optical fiber and coaxial cable distribution systems. The present invention utilizes optical fiber as the transmission medium for feeding a plurality of optical distribution nodes with video and telephony information from a head end. Coaxial cable distribution systems are utilized for connection of the distribution nodes to a plurality of remote units. The head end optically transmits the video information downstream to the nodes where it is converted to electrical signals for distribution to the remote units. Telephony information is also optically transmitted to the nodes in frequency bandwidths unused by the video information. The downstream telephony and video optical signals are converted to electrical telephony and video signals for distribution to the plurality of remote units. The network provides for transmission of upstream electrical data signals, for example telephony signals, to the head end by transmitting from the remote units upstream electrical data signals to the distribution nodes where such upstream electrical data signals are converted to upstream optical signals for transmission to the head end.

[0075] In one embodiment, the head end includes a first distribution terminal having at least one optical transmitter for transmitting optical downstream telephony signals on at least one optical fiber. In addition, the head end includes a second distribution terminal having a separate optical transmitter for transmitting an optical downstream video signal on an optical fiber line.

[0076] In another embodiment, the video and telephony signal distribution network transmits optical downstream video and telephony signals on at least one optical fiber in a first frequency bandwidth. In this embodiment, a second frequency bandwidth is reused for transmission of upstream electrical data signals generated at the remote units. The second frequency bandwidth is reused for transmission by each remote unit

[0077] In another embodiment of the invention, a filter is utilized at service units which interface the coaxial distribution systems to user equipment. The ingress filter allows for passage of downstream video signals to video equipment units and blocks downstream telephony signals transmitted in a different frequency bandwidth.

DESCRIPTION OF THE DRAWINGS

[0078] **FIG. 1** shows a block diagram of a communication system in accordance with the present invention utilizing a hybrid fiber/coax distribution network;

[0079] **FIG. 2** is an alternate embodiment of the system of **FIG. 1**;

[0080] **FIG. 3** is a detailed block diagram of a host digital terminal (HDT) with associated transmitters and receivers of the system of **FIG. 1**;

[0081] **FIG. 4** is a block diagram of the associated transmitters and receivers of **FIG. 3**;

[0082] **FIG. 5** is a block diagram of an optical distribution node of the system of **FIG. 1**;

[0083] **FIGS. 6, 7** are embodiments of frequency shifters for use in the optical distribution node of **FIG. 5** and the telephony upstream receiver of **FIG. 4**, respectively;

[0084] **FIG. 8** is a general block diagram of an integrated service unit (ISU) such as a home integrated service unit (HISU) or a multiple integrated service unit (MISU) of **FIG. 1**;

[0085] **FIGS. 9, 10, 11** show data frame structure and frame signaling utilized in the HDT of **FIG. 3**;

[0086] **FIG. 12** is a general block diagram of a coax master card (CXMC) of a coax master unit (CXMU) of **FIG. 3**;

[0087] **FIG. 13** shows a spectral allocation for a first transport embodiment for telephony transport in the system of **FIG. 1**;

[0088] **FIG. 14** shows a mapping diagram for QAM modulation;

[0089] **FIG. 15** shows a mapping diagram for BPSK modulation;

[0090] **FIG. 16** shows a subband diagram for the spectral allocation of **FIG. 13**;

[0091] **FIGS. 17, 18** show alternative mapping diagrams or constellations for QAM modulation;

[0092] **FIG. 19** shows a timing diagram of an identification and synchronization process;

[0093] **FIG. 20** shows a timing diagram of a burst identification and synchronization process;

[0094] **FIG. 21** is a block diagram of a master coax card (MCC) downstream transmission architecture of the CXMU for the first transport embodiment of the system of **FIG. 1**;

[0095] **FIG. 22** is a block diagram of a coax transport unit (CXTU) downstream receiver architecture of an MISU for the first transport embodiment of the system of **FIG. 1**;

[0096] **FIG. 23** is a block diagram of a coax home module (CXHM) downstream receiver architecture of an HISU for the first transport embodiment of the of the system of **FIG. 1**;

[0097] **FIG. 24** is a block diagram of a CXHM upstream transmission architecture associated with the CXHM downstream receiver architecture of **FIG. 23**;

[0098] **FIG. 25** is a block diagram of a CXTU upstream transmission architecture associated with the CXTU down receiver architecture of **FIG. 22**;

[0099] **FIG. 26** is a block diagram of an MCC upstream receiver architecture associated with the MCC downstream transmission architecture of **FIG. 21**;

[0100] **FIG. 27** is a flow diagram of a acquisition distributed loop routine for use with the system of **FIG. 1**;

[0101] **FIG. 28** is a flow diagram of a tracking distributed loop architecture routine for use with the system of **FIG. 1**;

[0102] **FIG. 29** shows a magnitude response of a polyphase filter bank of the MCC upstream receiver architecture of **FIG. 26**;

[0103] **FIG. 30** is an enlarged view of part of the magnitude response of **FIG. 29**;

[0104] **FIG. 31** is a block diagram an ingress filter structure and FFT of the MCC upstream receiver architecture of **FIG. 26**;

[0105] **FIG. 32** is a block diagram of a polyphase filter structure of the ingress filter structure and FFT of **FIG. 31**;

[0106] **FIG. 33** is a block diagram of a carrier, amplitude, timing recovery block of the downstream receiver architectures of the first transport embodiment;

[0107] **FIG. 34** is a block diagram of a carrier, amplitude, timing recovery block of the MCC upstream receiver architecture of the first transport embodiment;

[0108] **FIG. 35** is a block diagram of internal equalizer operation for the receiver architectures of the first transport embodiment;

[0109] **FIG. 36** is a spectral allocation of a second transport embodiment for transport in the system of **FIG. 1**;

[0110] **FIG. 37** is a block diagram of an MCC modem architecture of the CXMU for the second transport embodiment of the system of **FIG. 1**;

[0111] **FIG. 38** is a block diagram of a subscriber modem architecture of the HISU for the second transport embodiment of the system of **FIG. 1**;

[0112] **FIG. 39** is a block diagram of a modem of the subscriber modem architecture of **FIG. 38**;

[0113] **FIG. 40** is a block diagram for channel monitoring used in the system of **FIG. 1**;

[0114] **FIGS. 41, 42, 43** are flow diagrams for error monitor portions of channel monitor routines of **FIG. 40**;

[0115] **FIG. 44** is an alternate flow diagram for the diagram of **FIG. 42**;

[0116] **FIG. 45** is a flow diagram for a background monitor portion of the channel monitor routines of **FIG. 40**;

[0117] **FIG. 46** is a flow diagram for a backup portion of the channel monitor routines of **FIG. 40**;

[0118] **FIGS. 47, 48** are a flow diagram of an acquisition distributed loop routine for use with another embodiment of the system of **FIG. 1**;

[0119] **FIG. 49** is a flow diagram of a downstream tracking loop for use with the embodiment of **FIGS. 47 and 48**.

[0120] **FIG. 50** is a flow diagram of an upstream tracking loop for use with the embodiment of **FIGS. 47 and 48**.

[0121] **FIG. 51** is a block diagram showing the locking of all clocks within a system.

[0122] **FIGS. 52, 53** depict phase diagrams of symbol waveforms in an embodiment of the invention.

[0123] **FIGS. 54, 55, 56, 57** describe error rates and message-encoding methods for use in a system according to the invention.

[0124] **FIG. 58** is a block diagram of a scrambler for use in the invention.

[0125] **FIG. 59** is a block diagram of a control circuit for a CXMU of an HDT in a telecommunications system;

[0126] **FIGS. 60, 61, 62** are flow charts that illustrate methods for assigning subbands and allocating payload channels in a telecommunications system that uses a multi carrier communication scheme;

[0127] **FIGS. 63, 64, 65, 66, 67** are frequency spectrum diagrams that illustrate examples of assigning service units to subbands;

[0128] **FIG. 68** is a flow chart that illustrates error monitoring by the channel manager;

[0129] **FIG. 69** is a flow chart that illustrates a method for allocating an ISU data-link (IDL) channel in a telecommunications system;

[0130] **FIG. 70** is a block diagram of FFT system **2100**;

[0131] **FIG. 71** is a block diagram of modem **2400** which includes a FFT system **2100** configured to perform an IFFT in transmitter section **2401** and another FFT system **2100** configured to perform an FFT in receiver section **2402**;

[0132] **FIG. 72** is a block diagram of three logical banks of RAM: an input RAM **2251**, an output RAM **2253**, and a conversion RAM **2252**;

[0133] **FIG. 73** is a block diagram of one embodiment of a physical implementation which provides the function of input RAM **2241**, conversion RAM **2242**, and output RAM **2243**;

[0134] **FIG. 74** is a block diagram of one embodiment of a dual radix core **2600**;

[0135] **FIGS. 75, 76, 77, 78, 79, 80, 81, 82** together form a table showing the order of calculations for a "normal butterfly sub-operation";

[0136] **FIGS. 83, 84, 85, 86, 87, 88, 89, 90** together form a table showing the order of calculations for a "transposed butterfly sub-operation";

[0137] **FIG. 91** is a block diagram of one embodiment of dual-radix core **2600** showing the nomenclature used for the products output by multipliers **2620** through **2627** and for adder-subtractor-accumulators **2633**;

[0138] **FIG. 92** is a block diagram of one embodiment of an adder-subtractor-accumulator **2633**;

[0139] **FIG. 93** is a block diagram of modem **2400** which includes a Sigma-Delta ADC and decimator system to drive FFT system **2100**;

[0140] **FIG. 94** is a more detailed block diagram of modem receiver **2402**;

[0141] **FIG. 95** is a detailed block diagram of one embodiment of a Sigma-Delta converter **2840**;

[0142] **FIG. 96** is an overall schematic diagram of the data delivery transport system according to the present invention;

[0143] **FIG. 97** is a simplified block diagram of the head-end terminal **12** of the system **500** according to the present invention;

[0144] **FIG. 98** illustrates a Personal Cable Data Modem (PCDM) **540** and a Data Modem Service Module (DMSM) **550**;

[0145] **FIG. 99** illustrates in greater detail a PCDM **540**;

[0146] **FIG. 100** illustrates a Data Modem Channel Unit (DMCU) **560**;

[0147] **FIG. 101** shows a graph of average bandwidth per user as a function of the number of users for the system **500** according to the present invention;

[0148] **FIG. 102** is a simplified block diagram of the data transport and framing of the system **500** according to the present invention;

[0149] **FIG. 103** illustrates a Local Area Network Unit (LANU) **580** according to the present invention;

[0150] **FIG. 104** illustrates in more detail a DMSM **550** according to the present invention;

[0151] **FIG. 105** illustrates in more detail a DMCU **560** according to the present invention;

[0152] **FIGS. 106, 107, 108, 109** illustrate the call setup for a data connection on the system **500** according to the present invention;

[0153] **FIG. 110** illustrates a call termination sequence on the system **500** according to the present invention;

[0154] **FIG. 111** illustrates the software of a LANU **580** according to the present invention;

[0155] **FIG. 112** illustrates a PCDM **620** adapted for asymmetrical data delivery;

[0156] **FIG. 113** illustrates the heads configuration for asymmetrical data delivery according to the present invention;

[0157] **FIGS. 114, 115** illustrate another alternate embodiment of the invention wherein digital video is received over an ATM network and transmitted over a modified form of system **10**/**500**;

[0158] **FIG. 116** shows a block diagram of a hybrid fiber/coax network in accordance with the present invention;

[0159] **FIG. 117** is a block diagram of a head end host distribution terminal of the network of **FIG. 116**;

[0160] **FIG. 118** is a block diagram of an optical distribution node of the network of **FIG. 116**;

[0161] **FIG. 119** is a block diagram of a home coaxial line unit of the network of **FIG. 116**;

[0162] **FIG. 120** is a block diagram of an alternative embodiment for transmission from the head end to the optical distribution nodes in accordance with the present invention;

[0163] **FIG. 121** is a block diagram of an impulse shaping technique utilized in accordance with the present invention;

[0164] **FIG. 122** is a block diagram of an alternative embodiment of the optical to electrical converter of the head end host distribution terminal of **FIG. 117**;

[0165] **FIG. 123** is a block diagram of an alternative embodiment of the head end host distribution terminal of **FIG. 117**.

DETAILED DESCRIPTION OF THE PREFERRED EMBODIMENT

[0166] The communication system **10**, as shown in **FIG. 1**, of the present invention is an access platform primarily designed to deliver residential and business telecommunication services over a hybrid fiber-coaxial (HFC) distribution network **11**. The system **10** is a cost-effective platform for delivery of telephony and video services. Telephony services may include standard telephony, computer data and/or telemetry. In addition, the present system is a flexible platform for accommodating existing and emerging services for residential subscribers.

[0167] The hybrid fiber-coaxial distribution **11** utilizes optical fiber feeder lines to deliver telephony and video service to a distribution node **18** (referred to hereinafter as the optical distribution node (ODN)) remotely located from a central office or a head end **32**. From the ODNs **18**, service distributed to subscribers via a coaxial network. Several advantages exist by utilizing the HFC-based communication system **10**. By utilizing fiber installed in the feeder, the system **10** spreads the cost of optoelectronics across hundreds of subscribers. Instead of having a separate copper loop which runs from a distribution point to each subscriber ("star" distribution approach), the system **10** implements a bused approach where a distribution coaxial leg **30** passes each home and subscribers "tap" the distribution coaxial leg **30** for service. The system **10** also allows non-video services to be modulated for transmission using more cost-effective RF modem devices in dedicated portions of the RF spectrum. Finally, the system **10** allows video services to be carried on existing coaxial facilities with no additional subscriber equipment because the coaxial distribution links can directly drive existing cable-ready television sets.

[0168] It should be apparent to one skilled in the art that the modem transport architecture described herein and the functionality of the architecture and operations sounding such architecture could be utilized with distribution networks other than hybrid fiber coax networks. For example, the functionality may be performed with respect to wireless systems. Therefore, the present invention contemplates use of such systems in accordance with the accompanying claims.

[0169] The system **10** includes host digital terminals **12** (HDTs) which implement all common equipment functions for telephony transport, such as network interface, synchronization, DSO grooming, and operations, administration, maintenance and provisioning (OAM&P) interfaces, and which include the interface between the switching network

and a transport system which carries information to and from customer interface equipment such as integrated service units **100** (ISUs). Integrated services units (ISUs) **100**, such as home integrated service units (HISUs) **68** or multiple user integrated service units (MISUs) **66**, which may include a business integrated service unit as opposed to a multiple dwelling integrated service unit, implement all customer interface functions and interface to the transport system which carries information to and from the switched network. In the present system, the HDT **12** is normally located in a central office and the ISUs **100** are remotely located in the field and distributed in various locations. The HDT **12** and ISUs 100 are connected via the hybrid fiber-coax distribution network **11** in a multi-point to point configuration. In the present system, the modem functionality required to transport information over the HFC distribution network **11** is performed by interface equipment in both the HDT **12** and the ISUs **100**. Such modem functionality is performed utilizing orthogonal frequency division multiplexing.

[**0170**] The communication system shall now be generally described with reference to **FIGS. 1, 3** and **8**. The primary components of system **10** are host digital terminals (HDTs) **12**, video host distribution terminal (VHDT) **34**, telephony downstream transmitter **14**, telephony upstream receiver **16**, the hybrid fiber coax (HFC) distribution network **11** including optical distribution node **18**, and integrated service units **66**, **68** (shown generally as ISU **100** in **FIG. 8**) associated with remote units **46**. The HDT **12** provides telephony interface between the switching network (noted generally by trunk line **20**) and the modem interface to the HFC distribution network for transport of telephony information. The telephony downstream transmitter **14** performs electrical to optical conversion of coaxial RF downstream telephony information outputs **22** of an HDT **12**, shown in **FIG. 3**, and transmits onto redundant downstream optical feeder lines **24**. The telephony upstream receiver **16** performs optical to electrical conversion of optical signals on redundant upstream optical feeder lines **26** and applies electrical signals on coaxial RF upstream telephony information inputs **28** of HDT **12**. The optical distribution node (ODN) **18** provides in between the optical feeds lines **24** and **26** and coaxial distribution legs **30**. The ODN **18** combines downstream video and telephony onto coaxial distribution legs **30**. The integrated services units provide modem interface to the coaxial distribution network and service interface to customers.

[**0171**] The HDT **12** and ISUs **100** implement the telephony transport system modulator-demodulator (modem) functionality. The HDT **12** includes at least one RF MCC modem **82**, shown in **FIG. 3** and each ISU **100** includes an RF ISU modem **101**, shown in **FIG. 8**. The MCC modems **82** and ISU modems **101** use a multi-carrier RF transmission technique to transport telephony information, such as DS0+ channels, between the HDT **12** and ISUs **100**. This multi-carrier technique is based on orthogonal frequency division multiplexing (OFDM) where a bandwidth of the system is divided up into multiple carriers, each of which may represent an information channel. Multi-carrier modulation can be viewed as technique which takes time-division multiplexed information data and transforms it to frequency-division multiplexed data. The generation and modulation of data on multiple carriers is accomplished digitally, using an orthogonal transformation on each data channel. The receiver performs the inverse transformation on segments of the sampled waveform to demodulate the data. The multiple carriers overlap spectrally. However, as a consequence of the orthogonality of the transformation, the data in each carrier can be demodulated with negligible interference from the other carriers, thus reducing interference between data signals transported. Multi-carrier transmission obtains efficient utilization of the transmission bandwidth, particularly necessary in the upstream communication of a multi-point to point system. Multi-carrier modulation also provides an efficient means to access multiple multiplexed data steams and allows any portion of the band to be accessed to extract such multiplexed information, provides superior noise immunity to impulse noise as a consequence of having relatively long symbol times, and also provides an effective means for eliminating narrowband interference by identifying carriers which are degraded and inhibiting the use of these carriers for data transmission (such channel monitoring and protection is described in detail below). Essentially, the telephony transport system can disable use of carriers which have interference and poor performance and only use carriers which meet transmission quality targets.

[**0172**] Further, the ODNs **18** combine downstream video with the telephony information for transmission onto coaxial distribution legs **30**. The video information from existing video services, generally shown by trunk line **20**, is received by and processed by head end **32**. Head end **32** or the central office, includes a video host distribution terminal **34** (VHT) for video data interface. The VHDT **34** has optical transmitters associated therewith for communicating the video information to the remote units **46** via the ODNs **18** of the HFC distribution network **11**.

[**0173**] The telephony transmitter **14** of the HDTs **12**, shown in **FIGS. 3 and 4**, includes two transmitters for downstream telephony transmission to protect the telephony data transmitted. These transmitters are conventional and relatively inexpensive narrow band laser transmitters. One transmitter is in standby if the other is functioning properly. Upon detection of a fault in the operating transmitter, the transmission is switched to the standby transmitter. In contrast, the transmitter of the VHDT **34** is relatively expensive as compared to the transmitters of HDT **12** as it is a broad band analog DFB laser transmitter. Therefore, protection of the video information, a non-essential service unlike telephony data, is left unprotected. By splitting the telephony data transmission from the video data transmission, protection for the telephony data alone can be achieved. If the video data information and the telephony data were transmitted over one optical fiber line by an expensive broad band analog laser, economies may dictate that protection for telephony services may not be possible. Therefore, separation of such transmission is of importance.

[**0174**] Further with reference to **FIG. 1**, the video information is optically transmitted downstream via optical fiber line **40** to splitter **38** which splits the optical video signals for transmission on a plurality of optical fiber lines **42** to a plurality of optical distribution nodes **18**. The telephony transmitter **14** associated with the HDT **12** transmits optical telephony signals via optical fiber feeder line **42** to the optical distribution nodes **18**. The optical distribution nodes **18** convert the optical video signals and optical telephony signals for transmission as electrical outputs via the coaxial distribution portion of the hybrid fiber coax (HFC) distri-

bution network **11** to a plurality of remote units **46**. The electrical downstream video and telephony signals are distributed to ISUs via a plurality of coaxial legs **30** and coaxial taps **44** of the coaxial distribution portion of the HFC distribution network **11**.

[**0175**] The remote units **46** have associated therewith an ISU **100**, shown generally in **FIG. 8**, that includes means for transmitting upstream electrical data signals including telephony information, such as from telephones and data terminals, and in addition may include means for transmitting set top box information from set top boxes **45** as described further below. The upstream electrical data signals are provided by a plurality of ISUs **100** to an optical distribution node **18** connected thereto via the coaxial portion of the HFC distribution network **11**. The optical distribution node **18** converts the upstream electrical data signals to an upstream optical data signal for transmission over an optical fiber feeder line **26** to the head end **32**.

[**0176**] **FIG. 2** generally shows an alternate embodiment for providing transmission of optical video and optical telephony signals to the optical distribution nodes **18** from head end **32**, the HDT **12** and VHDT **34** in this embodiment utilize the same optical transmitter and the same optical fiber feeder line **36**. The signals from HDT **12** and VHDT **34** are combined and transmitted optically from headend **32** to splitter **38**. The combined signal is then split by splitter **38** and four split signals are provided to the optical distribution nodes **18** for distribution to the remote units by the coaxial distribution legs **30** and coaxial taps **44**. Return optical telephony signals from the ODNs **18** would be combined at splitter **38** for provision to the headend. However, as described above, the optical transmitter utilized would be relatively expensive due to its broad band capabilities, lessening the probabilities of being able to afford protection for essential telephony services.

[**0177**] As one skilled in the art will recognize, the fiber feeder lines **24**, **26**, as shown in **FIG. 1**, may include four fibers, two for transmission downstream from downstream telephony transmitter **14** and two for transmission upstream to upstream telephony receiver **16**. With the use of directional couplers, the number of such fibers may be cut in half. In addition, the number of protection transmitters and fibers utilized may vary as known to one skilled in the art and any listed number is not limiting to the present invention as described in the accompanying claims.

[**0178**] The present invention shall now be described in further detail. The first part of the description shall primarily deal with video transport. The remainder of the description shall primarily be with regard to telephony transport.

VIDEO TRANSPORT

[**0179**] The communication system **10** includes the head end **32** which receives video and telephony information from video and telephony service providers via trunk line **20**. Head end **32** includes a plurality of HDTs **12** and a VHDT **34**. The HDT **12** includes a network interface for communicating telephony information, such as T1, ISDN, or other data services information, to and from telephony service providers, such communication also shown generally by trunk **20**. The VHDT **34** includes a video network interface for communicating video information, such as cable TV video information and interactive data of subscribers to and from video service providers, such communication also shown generally by trunk line **20**.

[**0180**] The VHDT **34** transmits downstream optical signals to a splitter **38** via video optical fiber feeder line **40**. The passive optical splitter **38** effectively makes four copies of the downstream high bandwidth optical video signals. The duplicated downstream optical video signals are distributed to the correspondingly connected optical distribution nodes **18**. One skilled in the art will readily recognize that although four copies of the downstream video signals are created, any number of copies may be made by an appropriate splitter and that the present invention is not limited to any specific number.

[**0181**] The splitter is a passive means for splitting broad band optical signals without the need to employ expensive broad band optical to electrical conversion hardware. Optical signal splitters are commonly known to one skilled in the art and available from numerous fiber optic component manufacturers such as Gould, Inc. In the alterative, active splitters may also be utilized. In addition, a cascaded chain of passive or active splitters would further multiply the number of duplicated optical signals for application to an additional number of optical distribution nodes and therefore increase further the remote units serviceable by a single head end. Such alternatives are contemplated in accordance with the present invention as described by the accompanying claims.

[**0182**] The VHDT **34** can be located in a central office, cable TV head end, or a remote site and broadcast up to about 112 NTSC channels. The VHDT **34** includes a transmission system like that of a LiteAMp™ system available from American Lightwave Systems, Inc., currently a subsidiary of the assignee hereof. Video signals are transmitted optically by amplitude modulation of a 1300 nanometer laser source at the same frequency at which the signals are received (i.e. the optical transmission is a terahertz optical carrier which is modulated with the RF video signals). The downstream video transmission bandwidth is about 54-725 MHz. One advantage in using the same frequency for optical transmission of the video signal as the frequency of the video signals when received is to provide high bandwidth transmission with reduced conversion expense. This same-frequency transmission approach means that the modulation downstream requires optical to electrical conversion or proportional conversion with a photodiode and perhaps amplification, but no frequency conversion. In addition, there is no sample data bandwidth reduction and little loss of resolution.

[**0183**] An optical distribution node **18**, shown in further detail in **FIG. 5**, receives the split downstream optical video signal from the splitter **38** on optical fiber feeder line **42**. The downstream optical video signal is applied to a downstream video receiver **400** of the optical distribution node **18**. The optical video receiver **400** utilized is like that available in the Lite AMp™ product line available from American Lightwave Systems, Inc. The converted signal from video receiver **400**, proportionally converted utilizing photodiodes, is applied to bridger amplifier **403** along with converted telephony signals from downstream telephony receiver **402**. The bridger amplifier **403** simultaneously applies four downstream electrical telephony and video signals to diplex filters **406** which allow for full duplex

operation by separating the transmit a receive functions when signals of two different frequency bandwidths are utilized for upstream and downstream transmission. There is no frequency conversion performed at the ODN **18** with respect to the video or the downstream telephony signals as the signals are passed through the ODNs to the remote units via the coaxial portion of the HFC distribution network **11** in the same frequency bandwidth as they are received at the ODNs **18**.

[**0184**] After the ODN **18** has received the downstream optical video signals and such signals are converted to downstream electrical video signals, the four outputs of the ODN **18** are applied to four coaxial legs **30** of the coaxial portion of the HFC distribution network **11** for transmission of the downstream electrical video signals to the remote units **46**. Such transmission for the electrical video signals occurs in about the 54-725 MHz bandwidth Each ODN **18** provides for the transmission on a plurality of coaxial legs **30** and any number of outputs is contemplated in accordance with the present invention as described in the accompanying claims.

[**0185**] As shown in **FIG. 1**, each coaxial cable leg **30** can provide a significant number of remote units **46** with downstream electrical video and telephony signals through a plurality of coaxial taps **44**. Coaxial taps are commonly known to one skilled in the art and act as passive bidirectional pickoffs of electrical signals. Each coaxial cable leg **30** may have a number of coaxial taps **44** connected in series. In addition, the coaxial portion of the HFC distribution network **11** may use any number of amplifiers to extend the distance data can be sent over the coaxial portion of such HFC distribution network **11**.

[**0186**] Downstream video signals are provided from the coaxial taps **44** to the remote units **46**. The video signal from the coaxial tap **44** is provided to an HISU **68** which is generally shown by the block diagram of ISU **100** in **FIG. 8**. The ISU **100** is provided with the downstream electrical video and telephony signal from tap **44** and it is applied to diplex filter **104**. The downstream electrical video and telephony signal is passed through the diplex filter **104** to both an ingress filter **105** and ISU modem **101**. The downstream video signal is passed by the ingress filter **105** to video equipment via an optional set top box **45**. The downstream electrical telephony signal applied from the diplex filter **104** to the ISU modem **101** is processed as described in further detail below.

[**0187**] Ingress filter **104** provides the remote unit **46** with protection against interference of signal applied to the video equipment as opposed to those provided to other user equipment such as telephones or computer terminals. Ingress filter **105** passes the video signals; however, it blocks those frequencies not utilized by the video equipment. By blocking those frequencies not used by the video equipment, stray signals are eliminated that may interfere with the other services by the network to at least the same remote unit.

[**0188**] The set top box **45** is an optional element at the remote unit **46**. Interactive video data from set top box **45** would be transmitted by an additional separate RF modem provided by the video service provider at a relatively low frequency in the bandwidth of about 5 to 40 MHz. Such frequency must not be one used for the transport of upstream and downstream telephony data and downstream video.

[**0189**] For an MISU **66**, a separate coaxial line from coaxial tap **44** is utilized to provide transmission of video signals from the coaxial tap **44** to the set top box **45** and thus for providing downstream video signals to video equipment **47**. The ingress filter **104** as shown in **FIG. 8** is not a part of the MSU **66** a indicated by its dashed representation.

[**0190**] Alternative embodiments of the VHDT **34** may employ other modulation and mixing schemes or techniques to shift the video signals in frequency, and other encoding methods to transmit the information in a coded format. Such techniques and schemes for totting analog video data in addition to those transmitting digital video data, are known to one skilled in the art and are contemplated in accordance with the spirit and scope of the present invention as described in the accompanying claims.

TELEPHONY TRANSPORT

[**0191**] With reference to **FIG. 3**, telephony information and ISU operations and control data (hereinafter referred to as control data) modulated on carriers by MCC modem **82** is transmitted between the HDT **12** and the telephony downstream transmitter **14** via coaxial lines **22**. Telephony information and control data modulated on carriers by ISUs **100** is received at telephony upstream receiver **16** and communicated to the MCC modem **82** via coaxial cable lines **28**. The telephony downstream transmitter **14** and the telephony upstream receiver **16** transmit and receive, respectively, telephony information and control data via optical fiber feeder lines **24** and **26** to and from a corresponding optical distribution node **18**. The control data may include all operations, administration, maintenance & provisioning (OAM&P) for providing the telephony services of the system **10** and any other control data necessary for providing transport of telephony information between the HDT **12** and the ISUs **100**.

[**0192**] A block diagram of the HDT **12** is shown in **FIG. 3**. The HDT **12** includes the following modules: Eight DS1 Units (DS1U) (seven quad-DS1 units **48** plus one protection unit **50**), one protection switch & test conversion unit **52** (PSTU), two clock & time slot interchange units **54** (CTSUs) (one active and one standby/protection unit), six coax master units **56** (CXMUs) (three active and the standby/protection units), two shelf control units **58** (SCNUs) (one active and one standby/protection unit), and two power supply units **60** (PWRUs) (two load-sharing units which provide the appropriate HDT voltages from a central office supply). The DS1U units can also be adapted to transfer data in the standard E1U format, if desired.

[**0193**] The HDT **12** comprises all the common equipment functions of the telephony transport of the communication system **10**. The HDT **12** is normally located in a central office and directly interfaces to a local digital switch or digital network element equipment. The HDT provides the network interface **62** for all telephony information. Each HDT accommodates from 2 to 28 DSX-1 inputs at the network interface **62**, representing a maximum of 672 DS0 channels. The HDT **12** also provides all synchronization for telephony transport in the system **10**. The HDT **12** may operate in any one of three synchronization modes: external timing, line timing or internal timing. External timing refers to synchronization to a building integrated timing supply reference which is sourced from a central office in which the

HDT **12** is located. Line timing is synchronized to the recovered clock from a DSX-**1** signal normally derived from the local digital switch. Internal timing is a free-running or hold-over operation where the HDT maintains its own synchronization in the absence of any valid reference inputs.

[**0194**] The HDT **12** also provides quarter-DS**0** grooming capabilities and implements a 4096×4096 full-access, non-blocking quarter-DS**0** (16 kbps) cross-connect capability. This allows DS**0**s and quarter-DS**0**s (ISDN "D" channels) to be routed from any timeslot at the DSX-**1** network interface **62** to any customer serviced by any ISU **100**.

[**0195**] The HDT **12** further provides the RF modem functionality required for telephony transport over the HFC distribution network **11** including the MCC modem **82**. The HDT **12** accommodates up to three active CXMUs **56** for providing the modem interface to the HFC distribution network **11** and also provides one-for-one protection for each active CXMU **56**.

[**0196**] The HDT **12** coordinates the telephony transport system including control and communication of many ISUs of the multi-point to point communication system **10**. Each HDT **12** module performs a function. The DS1U module **48** provides the interface to the digital network and DSX-**1** termination. The PSTU **52** provides DS1U equipment protection by switching the protection DS1U **50** for a failed DS1U module **48**. The CTSU **54** provides the quarter-DS**0** timeslot grooming capability and all system synchronization functions. The CTSU **54** also coordinates all call processing in the system. The CXMU **56**, described in further detail below, provides the modem functionality and interface for the OFDM telephony transport over the HFC distribution network **11** and the SCNU **58** supervises the operation of the entire communication system providing all OAM&P functions for telephony transport. Most processing of requests for provisioning is performed by the SCNU **58**.

[**0197**] Downstream Telephony Transmitter

[**0198**] The downstream telephony transmitter **14**, shown in **FIG. 4**, takes the coaxial RF outputs **22** from the active CXMUs **56** of the HDT **12** which carry telephony information and control data and combines the outputs **22** into a downstream telephony transmission signal. The electrical-to-optical conversion logic required for the optical transmission is implemented in a stand-alone downstream telephony transmitter **14** rather than in the HDT **12** to provide a more cost effective transport solution. By placing this function in a separate component, the expense of this function does not need to be replicated in each CXMU **56** of the HDT **12**. This reduces the cost of the CXMU **56** function and allows the CXMU **56** to transmit and receive over coax instead of fiber. The downstream telephony transmitter **14** also provides for transmission on redundant downstream fiber feeder lines **24** to an ODN **18**.

[**0199**] The downstream telephony transmitter **14** is co-located with the HDT **12** preferably within a distance of 100 feet or less. The downstream telephony transmitter **14** receives the coaxial RF outputs from the active CXMUs **56**, each within a 6 MHz frequency band, and combines them at combiner **25** into a single RF signal. Each 6 MHz frequency band is separated by a guard band as is known to one skilled in the art. Downstream telephony information is then transmitted in about the 725-800 MHz frequency band. The telephony transmitter **14** passes the combined signal through a 1-to-2 splitter (not shown), thereby producing redundant downstream electrical signals. The two redundant signals are each delivered to redundant laser transmitters **501** for electrical-to-optical conversion and the redundant signals modulate an optical output such that the output of the downstream telephony transmitter **14** is on two optical feeder lines **24**, each having an identical signal modulated thereon. This provides protection for the downstream telephony portion of the present system. Both Fabry-Perot lasers in the telephony transmitter **14** are active at all times. All protection functions are provided at the receive end of the optical transmission (located at the ODN **18**) where one of two receivers is selected as "active;" therefore, the telephony transmitter **14** requires no protection switching capabilities.

[**0200**] Upstgream Telephony Receiver

[**0201**] The upstream telephony receiver **16** performs the optical-to-electrical conversion on the upstream optical telephony signals on the upstream optical feeder lines **26** from the ODN **18**. The upstream telephony receiver **16** is normally co-located in the central office with the HDT **12**, and provides an electrical coaxial output to the HDT **12**, and a coaxial output **23** to be provided to a video set-top controller (not shown). Upstream telephony information is routed via coax lines **28** from the upstream telephony receiver **16** to active CXMUs **56** of the HDT **12**. The coaxial link **28** between the HDT **12** and the upstream telephony receiver **16** is preferably limited to a distance of 100 feet or less and is an intra-office link Video set-top controller information, as described in the Video Transport section hereof, is located in a bandwidth of the RF spectrum of 5-40 MHz which is not utilized for upstream telephony transport such that it is transmitted along with the upstream telephony information.

[**0202**] The upstream telephony receiver **16** has dual receivers **502** for the dual upstream optical fiber lines **26**. These feeder lines **26** carry redundant signals from the ODN **18** which contain both telephony information and control data and also video set-top box information. The upstream telephony receiver **16** performs automatic protection switching on the upstream feeder lines **26** from the ODN. The receiver **502** selected as "active" by protection logic is split to feed the coaxial outputs **28** which drive the HDT **12** and output **23** is provided to the set-top controller (not shown).

[**0203**] Optical Distribution Node

[**0204**] Referring to **FIG. 5**, the ODN **18** provides the interface between the optical feeder lines **24** and **26** from the HDT **12** and the coaxial portion of the HFC distribution network **11** to the remote units **46**. As such, the ODN **18** is essentially an optical-to-electrical and electrical-to-optical converter. The maximum distance over coax of any ISU **100** from an ODN **18** is preferably about 6 km and the maximum length of the combined optical feeder line/coaxial drop is preferably about 20 km. The optical feeder line side of the ODN **18** terminates six fibers although such number may vary. They include: a downstream video feeder line **42** (single fiber from video splitter **38**), a downstream telephony feeder line **24** (from downstream telephony transmitter **14**), a downstream telephony protection feeder line **24** (from downstream telephony transmitter **14**), an upstream telephony feeder line **26** (to upstream telephony receiver **16**), an upstream protection feeder line **26** (to upstream telephony receiver **16**), and a spare fiber (not shown). The ODN **18**

provides protection switching functionality on the receive optical feeder lines **24** from the downstream telephony transmitter. The ODN provides redundant transmission on the upstream optical feeder lines **26** to the upstream telephony receiver. Protection on the upstream optical feeder lines is controlled at the upstream telephony receiver **16**. On the coaxial distribution side of ODN **18**, the ODN **18** terminates up to four coaxial legs **30**.

[**0205**] In the downstream direction, the ODN **18** includes downstream telephony receiver **402** for converting the optical downstream telephony signal into an electrical signal and a bridger amplifier **403** that combines it with the converted downstream video signal from downstream video receiver **400** terminated at the ODN **18** from the VHDT **34**. This combined wide-band electrical telephony/video signal is then transported in the spectrum allocated for downstream transmission, for example, the 725-800 MHz band, on each of the four coaxial legs of the coaxial portion of the HFC distribution network **11**. As such, this electrical telephony and video signal is carried over the coaxial legs **30** to the ISUs **100**; the bridger amplifier **403** simultaneously applying four downstream electrical telephony and video signals to diplex filters **406**. The diplex filters **406** allow for full duplex operation by separating the transport and receive functions when signals at two different frequency bandwidths are utilize for upstream and downstream transmission. There is no frequency conversion available at the ODN **18** for downstream transport as the telephony and video signals are passed through the ODN **18** to the remote units **46** via the coaxial portion of HFC distribution network **11** in the same frequency bandwidth as they are received at the ODN **18**. As shown in **FIG. 1**, each coaxial leg **30** can provide a significant number of remote units **46** with downstream electrical video and telephony signals through a plurality of coaxial taps **44**. Coaxial taps **44** commonly known to one skilled in the art act as passive bidirectional pickoffs of electrical signals. Each coaxial leg **30** may have a number of coaxial taps connected in a series. In addition, the coaxial portion of the HFC distribution network **11** may use any number of amplifiers to extend the distance data can be sent over the coaxial portions of the system **10**. The downstream electrical video and telephony signals are then provided to an ISU **100** (**FIG. 8**), which, more specifically, may be an HISU **68** or an MISU **66** as shown in **FIG. 1**.

[**0206**] In the upstream direction, telephony and set top box information is received by the ODN **18** at diplex filters **406** over the four coaxial legs **30** in the RF spectrum region from 5 to 40 MHz. The ODN **18** may include optional frequency shifters **64** equipped on up to three of four coaxial legs **30**. The frequency shifters **64**, if utilized, mix the upstream spectrum on a coaxial leg to a higher frequency prior to combining with the other three coaxial legs. Frequency shifters **64** are designed to shift the upstream spectrum in multiples of 50 MHz. For example, the frequency shifters **64** may be provisioned to mix the upstream information in the 5-40 MHz portion of the RF spectrum to any of the following ranges: 50 to 100 MHz. 100 to 150 MHz, or 150 to 200 MHz. This allows any coaxial leg **30** to use the same portion of the upstream RF spectrum as another leg without any spectrum contention when the upstream information is combined at the ODN **18**. Provisioning of frequency shifters is optional on a coaxial leg **30**. The ODN **18** includes combiner **408** which combines the electrical upstream telephony and set top box information from all the coaxial legs **30** (which may or may not be frequency shifted) to form one composite upstream signal having all upstream information present on each of the four coaxial legs **30**. The composite electrical upstream signal is passively 1:2 split and each signal feeds an upstream Fabry-Perot laser transmitter which drives a corresponding upstream fiber feeder line **26** for transmission to the upstream telephony receiver **16**.

[**0207**] **FIG. 6** illustrates an embodiment of a frequency shifter, indicated generally at **64'**, for use in ODN **18** of **FIG. 5**. Frequency shifter **64'** comprises a mixer **700** that is coupled to receive and shift the frequency band of RF signals in the upstream direction from diplex filter **406** for a coaxial leg **30**. An output of mixer **700** is coupled through a bandpass filter **704** to combiner **408**. Local oscillator **702** is coupled to provide a signal to control the operation of mixer **700**.

[**0208**] In operation, frequency shifter **64'** shifts a block of RF signals from a first frequency range to a second frequency range. For example, as mentioned above, the RF signals provided to frequency shifter may compromise RF signals in the range from 5 to 40 MHz. In one embodiment, ODN **18** comprises three frequency shifters **64'**. In this embodiment, the local oscillators **702** of the three frequency shifters provide signals of 76 MHZ, 149 MHZ, and 222 MHZ respectively. Thus, frequency shifters **64'** respectively shift the upstream RF signals approximately to the 50 to 100 MHZ, 125 to 175 MHZ and 200 to 250 MHZ ranges.

[**0209**] If the upstream telephony and set top box signals are upshifted at the ODN **18**, the upstream telephony receiver **16** includes frequency shifters **31** to downshift the signals according to the upshifting done at the ODN **18**. A combiner **33** then combines the downshifted signals for application of a combined signal to the HDT **12**. Such downshift and combining is only utilized if the signals are upshifted at the ODN **18**.

[**0210**] **FIG. 7** illustrates an embodiment of a frequency shifter, indicated generally at **31'**, for use in telephony upstream receiver **16** of **FIG. 8**. Frequency shifter **31'** returns a block of RF signals shifted by frequency shifter **64'** to original frequency range of the blocks. For example, frequency shifter **31'** may return a block of RF signals to 5 to 40MHZ from 50 to 100 MHZ.

[**0211**] As discussed in more detail below, the upstream telephony signals processed by frequency shifters **31'** and **64'** are typically OFDM signals. Thus, frequency shifters **64'** must return the RF signals to the original frequency range without introducing adverse phase and frequency errors. To reduce the likelihood of this corruption of the OFDM signals, frequency shifter **31'0** locks its local oscillator to the local oscillator of a corresponding frequency shifter **64'** using a pilot tone transmitted from ODN **18** to telephony upstream receiver **16**.

[**0212**] Frequency shifter **31'** includes a bandpass filter **706** that is coupled to receive an RF signal from ODN **18**. Bandpass filter **706** is coupled to a splitter **708**. Splitter **708** is coupled to provide the RF signal to an input of mixer **718**. Further, splitter **708** provides a second output that is used to generate a local oscillator signal for mixer **718**. This local oscillator signal is phase locked with a corresponding local oscillator **702** of frequency converter **64'**. This second output

of splitter **708** is coupled to phase detector **712** through bandpass filter **710**. Phase detector **712** is coupled to provide a control signal to voltage controlled oscillator **714**. Voltage controlled oscillator **714** is coupled through sputter **716** to provide the local oscillator signal to mixer **718**. Splitter **716** further provides a feedback signal to phase detector **712**.

[**0213**] In operation, phase detector **712** phase locks local oscillator signal of frequency shifter **31'** with local oscillator **702** of a corresponding frequency shifter **64'**. Phase detector **712** compares the pilot tone from ODN **18** with the feedback signal from voltage controlled oscillator **714** to generate the control signal for voltage controlled oscillator **714**. Consequently, the local oscillator signal provided to mixer **718** is phase locked with the corresponding local oscillator **702** of frequency shifter **64'**. Mixer **718** uses the local oscillator signal from splitter **716** and voltage controlled oscillator **714** to shift the block of RF signals received by frequency shifter **31'** to the original frequency range of the block of RF signals. Advantageously, unacceptable modifications of the OFDM upstream signal by frequency shifters **64'** and **31'** are thus avoided.

[**0214**] Integrated Services Unit (ISUs)

[**0215**] Referring to **FIG. 1**, the ISUs **100**, such as HISU **68** and MISU **66**, provide the interface between the HFC distribution network **11** and the customer services for remote units **46**. Two basic types of ISUs are shown, which provide service to specific customers. Multiple user integrated service unit **66** (MISUs) may be a multiple dwelling integrated service unit or a business integrated service unit. The multiple dwelling integrated service unit may be used for mixed residential and business environments, such as multi-tenant buildings, small businesses and clusters of homes. These customers require services such as plain old telephone service (POTS), data services, DS**1** services, and standard TR-57 services. Business integrated service units are designed to service business environments. They may require more services, for exanple, data services, ISDN, DS**1** services, higher bandwidth services, such as video conferencing, etc. Home integrated services units **68** (HISUs) are used for residential environments such as single-tenant buildings and duplexes, where the intended services are POTS and basic rate integrated digital services network (ISDN). Description for ISUs shall be limited to the HISUs and MISUs for simplicity purposes as multiple dwelling and business integrated service units have similar functionality as far as the present invention is concerned.

[**0216**] All ISUs **100** implement RF modem functionality and can be generically shown by ISU **100** of **FIG. 8**. ISU **100** includes ISU modem **101**, coax slave controller unit (CXSU) **102**, channel units **103** for providing customer service interface, and diplex filter/tap **104**. In the downstream direction, the electrical downstream telephony and video signal is applied to diplex filter/tap **104** which passes telephony information to ISU modem **101** and video information to video equipment via an ingress filter **104** in the case of a ISU. When the ISU **100** is a MISU **66**, the video information is rejected by the diplex filter. The ISU modem **101** demodulates the downstream telephony information utilizing a modem corresponding to the MCC modem **82** used for modulating such information on orthogonal multi-carriers at HDT **12**. ISU **100** demodulates downstream telephony information from a coaxial distribution leg **30** in a provisionable 6 MHz frequency band. Tuning generation **107** of the ISU modem **101** provides clocking for CXSU **102** which provides processing and controls reception and transmission by ISU modem **101**. The demodulated data from ISU modem **101** is passed to the applicable channel units **103** via CXSU **102** depending upon the service provided. For example, the channel units **103** may include line cards for POTS, DS**1** services, ISDN, other data services, etc. Each ISU **100** provides access to a fixed subset of all channels available in a 6 MHz frequency band corresponding to one of the CXMUs of HDT **12**. This subset of channels varies depending upon the type of ISU **100**. An MISU **66** may provide access to many DSO channels in a 6 MHz frequency band, while an HISU **68** may only provide access to a few DS**0** channels.

[**0217**] The channel units **103** provide telephony information and control data to the CXSU **102**, which provides such data to ISU modem **101** and controls ISU modem **101** for modulation of such telephony data and control data in a provisional 6 MHz frequency band for transmission onto the coaxial distribution leg **30** connected thereto. The upstream 6 MHz frequency band provisionable for transmission by the ISU **100** to the HDT **12** corresponds to one of the downstream 6 MHz bands utilized for transmission by the CXMUs **56** of HDT **12**.

[**0218**] The CXSU **102** which applies demodulated data from the ISU modem **101** to the applicable channel units, performs data integrity checking on the downstream **10** bit DS**0+** packets received from the ISU modem **101**. Each ten bit DS**0+** packet as described below includes a parity or data integrity bit The CXSU **102** will check the parity of each downstream 10 bit DS**0+** channel it receives. Further, the parity of each upstream DS**0+** received from the channel units **103** is calculated and a parity bit inserted as the tenth bit of the upstream DS**0+** for decoding and identification by the HDT **12** of an error in the upstream data. If an error is detected by CXSU **102** when checking the parity of a downstream **10** bit DS**0+** channel it receives, the parity bit of the corresponding upstream channel will be intentionally inverted to inform the HDT **12** of a parity error in the downstream direction. Therefore, the upstream parity bit is indicative of errors in the downstream DSO+channel and the corresponding downstream DS**0+** channel. An example of such a parity bit generation process is described in U.S. patent application 08/074,913 entitled "Point-to Multipoint Performance Monitoring and Failure Isolation System" assigned to the assignee hereof and entirely incorporated herein by reference. This upstream parity bit is utilized in channel monitoring as described further below. As would be apparent to one skilled in the art, the parity checking and generation may be performed, at least in part, in other elements of the ISU or associated therewith such as the channel units.

[**0219**] Each ISU **100** recovers synchronization from downstream transmission, generates all clocks required for ISU data transport and locks these clocks to the associated HDT timing. The ISUs **100** also provide call processing functionality necessary to detect customer line seizure and line idle conditions and transmit these indications to the HDT **12**. ISUs **100** terminate at receive control data from the HDT **12** and pros the control data received therefrom. Included in this processing are messages to coordinate dynamic channel allocation in the communication system

10. Finally, ISUs **100** generate ISU operating voltages from a power signal received over the HFC distribution network **11** as shown by the power signal **109** taken from diplex filter/tap **104**.

[**0220**] Data Path in HDT

[**0221**] The following is a detailed discussion of the data path in the host digital terminal (HDT) **12**. Referring to **FIG. 3**, the data path between the network facility at the network interface **62** and the downstream telephony transmitter **14** proceeds through the DSIU **48**, CTSU **54**, and CXMU **56** modules of the HDT **12**, respectively, in the dowstream direction. Each DSIU **48** in the HDT **12** takes four DS1s from the network and formats this information into four 24-channel, 2.56 Mbps data streams of modified DS**0** signals referred to as CTSU inputs **76**. Each DS**0** in the CTSU input has been modified by appending a ninth bit which can carry multiframe timing, signaling information and control/status messages (**FIG. 9**). This modified DS**0** is referred to as a "DS**0**+." The ninth bit signal (NBS) carries a pattern which is updated each frame and repeats every 24 frames. This maps each 64 kbps DS**0** from the network into a 72 kbps DS**0**+. Thus, the twenty-four DS**0** channels available on each DS**1** are formatted along with overhead information into twenty-four DS**0**+ channels on each of four CTSU input streams.

[**0222**] The ninth bit signaling (NBS) is a mechanism developed to carry the multiframe timing, out-of-band signaling bits and miscellaneous status and control information associated with each DS**0** between the DS1U and the channel units. Its main functions are to carry the signaling bits to channel units **103** and to provide a multiframe clock to the channel units **103** so that they can insert upstream bit signaling into the DS**0** in the correct fame of the multiframe. Because downstream DS**0**s may be coming from DS1s which do not share the same multiframe phase each DS**0** must carry a multiframe clock or marker which indicates the signaling frames associated with the origination DS**1**. The NBS provides this capability. Ninth bit signaling is transparent to the OFDM modem transport of the communication system **10**.

[**0223**] Up to eight DS1Us **48** may be equipped in a single HDT **12**; including seven active DS1Us **48** and a protection DS1U module **50**. Thus, 32 CTSU inputs are connected between the DS1Us and the CTSUs **54** but a maximum of 28 can be enabled to carry traffic at any one time. The four remaining CTSU inputs are from either the protection DS1U or a failed DS1U. The PSTU includes switch control for switching the protection DS1U **50** for a failed DS1U.

[**0224**] Each CTSU input is capable of carrying up to 32, 10-bit channels, the first 24 channels carry DS**0**+s and the remaining bandwidth is unused. Each CTSU input **76** is clocked at 2.56 Mbps and is synchronized to the 8 kHz internal frame signal (**FIG. 11**). This corresponds to 320 bits per 125 μsec frame period. These 320 bits are framed as shown in **FIG. 9**. The fourteen gap bits **72** at the beginning of the frame carry only a single activity pulse in the 2nd bit position, the remaining 13 bits are not used. Of the following 288 bits, the first 216 bits normally carry twenty-four DS**0**+ channels where each DS**0**+ corresponds to a standard 64 kbps DS**0** channel plus the additional 8 kbps signaling bit. Thus, each DS**0**+ has a bandwidth of 72 kbps (nine bits every 8 kHz frame). The remaining 72 bits are reserved for additional DS**0**+ payload channels. The final eighteen bits 74 of the frame are unused gap bits.

[**0225**] The clock and time slot interchange unit **54** (CTSU) of the HDT **12** takes information from up to 28 active CTSU input data streams **76** and cross-connects them to up to twenty-four 32-channel, 2.56 Mbps output data steams **78** which are input to the coax master units (CXMUs) **56** of the HDT **12**. The format of the data streams between the CTSU **54** and the CXMUs **56** is referred to as a CTSU output. Each CTSU output can also carry up to 32, 10-bit channels like the CTSU input. The first 28 carry traffic and the remaining bandwidth is unused. Each CTSU output is clocked at 2.56 Mbps and is synchronized to the 8 kHz internal framing signal of the HDT **12** (**FIG. 11**). This corresponds to 320 bits per 125 μsec frame period. The frame structure for the 320 bits are as described above for the CTSU input structure.

[**0226**] The HDT **12** has the capability of time and space manipulation of quarter-DS**0** packets (16 kbps). This function is implemented with the time slot interchange logic that is part of CTSU **54**. The CTSU implements a 4096×4096 quarter-DS**0** cross-connect function, although not all time slots are utilized. In normal operation, the CTSU **54** combines and relocates up to 672 downstream DS**0**+ packets (or up to 2688 quarter-DS**0** packets) arranged at 28 CTSU inputs of 24 DS**0**+s each, into 720 DS**0**+ packets (or 2880 quarter-DS**0** packets) arranged as 24 CTSU outputs of 32 DS**0**+s each.

[**0227**] The system has a maximum throughput of 672 DS**0**+ packets at the network interface so not all of the CTSU output bandwidth is usable. If more than the 672 channels are assigned on the "CFSU output" side of the CTSU, this implies concentration is being utilized Concentration is discussed further below.

[**0228**] Each CXMU **56** is connected to receive eight active CTSU outputs 78 from the active CTSU **54**. The eight CTSU outputs are clocked by a 2.56 MHz system clock and each carries up to 32 DS**0**+s as described above. The DS**0**+s are further processed by the CXMU **56** and a tenth parity bit is appended to each DS**0**+ resulting in a 10 bit DS**0**+. These 10 bit packets contain the DS**0**, the NBS (ninth bit signal) and the parity or data integrity bit (**FIG. 10**). The 10 bit packets are the data transmitted on the HFC distribution network **11** to the ISUs **100**. The 10th bit or data integrity bit inserted in the downstream channels is decoded and checked at the ISU and utilized to calculate and generate a parity bit for corresponding channels in the upstream as described above. This upstream parity bit which may be representative of an error in the downstream or upstream channel is utilized to provide channel protection or monitoring as further described herein

[**0229**] CTSU **54** is also capable of applying a conventional Reed-Soloman code to transmitted payload data for running error correction. Such codes carry an overhead which must be borne by the inclusion of error-costing symbols in each block or message transmitted. Generally, two check symbols are required to correct one corrupted data symbol in a message. (The incorrect symbol may contain any number of errors in its 5 bits, as long as all bit errors are confined to the same symbol. But even a single incorrect bit in each of two symbols counts as two errors.) Short messages impose less computational overhead on a

system, but can correct fewer errors in the message. Conversely, long messages require more computation and more latency before the corrections can be applied, but their error-correction ability is greater. **FIG. 54** represents, for an example system, the probability of an uncorrectable error in a frame for various error probabilities in one individual symbol. The solid curve shows the error performance for a 21-frame message having 19 frames of data symbols and two frames of error-correction code; the dashed curve represents a 41 -frame message having 37 data and four code frames; the dotted curve gives the best performance, with 73 data frames and eight code frames in an 81 -frame message.

[**0230**] The present system allows a choice of different error-correction abilities for different types of data. For example, voice data is highly redundant, and needs little defense against errors. Financial transaction data, on the other hand, wants a large degree of data integrity. In addition, it may be desirable to allow a user to select—and pay for—whatever degree of error correction that he desires. CTSU **54**, **FIG. 3**, includes a conventional "provisioning table", which specifies a number of parameters relating to particular payload channels. **FIG. 55** shows a provisioning table **4411** having an added column containing indications for several different amounts of error protection. In method **4410**, step **4412** reads the entry for a particular channel to be set up. In this implementation, the entry may specify message lengths of 21, 41, or 81 bits, respectively having the ability to correct 1, 2, or 4 symbols; the entry may also specify no correction, in which case message blocks do not apply. Step **4413** encodes the table entry in an IOC message and sends it to the ISU whose adds appears in that row of table **4111**. A general-purpose processor in CXSU **102** of the ISU stores the frame length in step **4414**. As the CXSU receives data from modem **101**, **FIG. 8**, it decodes the frames of an entire message, **4415**, then decodes the check symbols for the message, **4416**, and signals an error, **4417**, if one exists in the message. Steps **4415-4417** repeat for subsequent messages. The ISU employs the same process to send frames upstream to the head end, using the frame length setting specified in step **4414**.

[**0231**] Within both CXSU **102** at the ISU and the CXMU, **FIG. 12** at the HDT, a 21 -frame message or block requires 19 symbol or frame times to decode the message, then has two frames of latency while its two check symbols are decoded. A 41-frame message uses four frames of time for computation of any errors from the four check symbols following its 37 data symbols. An 81-frame message presents any error indication 8 frame times after the end of its 73 data frames. (One extra frame of delay is imposed in the downstream direction due to remapping at the HDT.) If all messages were to start at the same time for all channels in an entire band, the computational load in the HDT would peak during the check-symbol frames, and would be lower at other times. Since the processor must be capable of handling the peak loads, its power is underutilized at other times.

[**0232**] The present system allows a lower-capacity processor to handle error correction by staggering the beginning times of different messages in different subbands of channels, so that not all of them come due at the same time. That is, the start of a message in any channel of a subband is offset from the start of a message or "multiframe" signal, to be described, by a predetermined number of frame times of 125 μsec. each. The table below shows how the 24 subbands of **FIG. 16** are offset, for each message length which can be selected.

TABLE 1

Subband	21 frames	41 frames	81 frames
0	0	0	0
1	0	0	1
2	0	1	2
3	0	1	3
4	1	2	4
5	1	2	5
6	1	3	6
7	1	3	7
8	2	4	8
9	2	4	9
10	2	5	10
11	2	5	11
12	3	6	12

[**0233**] Only 13 subband settings are required, since no unit tunes more than 130 channels. Giving all 10 channels of each subband the same offset does not overload the processors of the remote units. However, the head end (HDT), which receives and transmits all channels, can enjoy significant relief from not having to encode or decode the check symbols for all channels at the same time.

[**0234**] **FIG. 56** shows steps **4120** for performing frame staggering. Step **4421** repeats method **4420** for all active payload channels. Step **4422** accesses the current messages for the channels in one subband. Step **4423** calculates the 1, 2, or 4 Reed-Soloman check words for the 21, 41, or 81 message data words. Step **4424** waits N frames past the start of a multiframe, whereupon step **4425** sends the message to modem **82**, **FIG. 3** for transmission.

[**0235**] At a remote ISU, CXSU performs the same steps **4420** for upstream messages. Step **4422** is required only in an MISU, because all channels in an HISU reside in the same subband. Method **4420** may be performed at both ends of the system, as described herein; it my also be performed only at one end, either HDT or ISU. Staggering from the ISU to the HDT is preferable if only one end is staggered, because the most critical processing load is the error-correction of all 240 channels in the upstream receiving modem, **FIG. 26**.

[**0236**] The use of error-correcting codes along with unencoded data raises problems in a real-time transport system. Data arrives from the trunk line **20**, **FIG. 1**, at a constant rate. This data must be transmitted downstream in the same time duration, whether it is encoded along the way, or sent unencoded. Likewise, upstream data usually must be transmitted at the same rate whether or not it is encoded. That is, the use of error-correcting codes must be time-transparent at both ends of the system. But error-correcting codes require the transmission of check digits or symbols along with the data. The present system resolves this difficulty by packing the data words differently if they are encoded. As explained above, the basic unencoded word length for a DS0++ channel is ten bits: eight data bits, a signaling (NBS) bit, and a parity bit. When encoding is used, however, this format is changed to nine-bit words, with a single parity bit for the entire message. This is the reason for the choice of frame sizes for the encoded modes. A 21-frame message contains

19 data frames, which would ordinarily be transmitted as 10×19=190 bits. Those same data frames, packaged as nine-bit words along with two nine-bit check words, require (19+2)×9=189 bits; adding one more parity bit covering the entire message lock gives 190 bits, the same number as that required for the unencoded version of the same data. The 41-frame message has 37 frames of data, or 370 bits in unencoded 10-bit format. Encoded as 37 nine-bit words along with four check words, the same message requires (37+4)×9=369 bits; again, a single additional parity bit yield the 370 bits of the same data in unencoded form. The 81-frame format has 73 data words, 8 check words, and a parity bit, yielding the same number of bits as 73 data words in 10-bit form.

[0237] There are may other combinations of numbers which yield similar results. These can be found heuristically without a great deal of experimentation. The first step is to estimate rough numbers of large (parity-bearing) words in one or more message sizes and the number of errors desired to be correctable for each size. The next step is to determine a number of smaller (non-parity) words that carry the same amount of data, but which form a total message the same size or slightly mailer than the total number of bits in the large-word format. Any excess bits then are assigned to parity over the block—or to any other function, for that matter. For example, if two bits are left over instead of one for each message, they could represent two parity bits over the message, two control or format-designation bits, etc. The use of check symbols, of course, greatly reduces the need for parity or other forms of error detection. In fat, while the present system uses the message-parity bit as parity in the downstream direction, the ISU deliberately sets the parity bit to an incorrect value in an upstream message if it was incorrect in the downstream message. This serves to signal the HDT that a bit error was encountered, when the HDT would not otherwise be aware of it; this in turn allows the HDT to keep more accurate statistics on channel quality for reallocating channels, or for other purposes.

[0238] **FIG. 57** shows a method **4430** for adding the "code packing" feature to the method **4420** of **FIG. 56**. Step **4431** repeats the steps for all channels. Step **4432** determines whither the data for the channel is to be encoded or not. If not, step **4433** merely transmits it word-by-word to the modem. If it is to be encoded, step **4434** strips the parity (or other) bit(s) from each word. After step **4435** has formed the check words, step **4436** calculates the message-wide parity, or other desired function. Thereafter, step **4437** waits the proper number of frame times (as specified by method **4420**, and step **4338** sends the message to the modem as before.

[0239] In the upstream direction, the reverse path through the HDT is substantially a mirror of the forward path through the HDT **12**. For example, the tenth parity bit is processed at the CXMU **56** and the signal from the CXMU **56** to the CTSU **54** is in the format of **FIG. 9**.

[0240] The round trip delay of a DS0 is the same for every data path. The time delay over the path from the downstream CTSU output, through CXMU **56**, over the HFC distribution network to the ISU **100** and then from the ISU **100**, back over the HFC distribution network **11**, through CXMU **56** and to CTSU **54** is controlled by upstream synchronization, as described in detail below. Generally, path delay is measured for each ISU and if it is not the correct number of frames long, the delay length is adjusted by adding delay to the path at the ISU **100**.

[0241] Coax Master Unit (CXMU)

[0242] The coax master unit **56** (CXMU), shown in **FIG. 3**, includes the coax master card logic **80** (CXMC) and the master coax card (MCC) modem **82**. As previously described, up to six CXMUs may be equipped in an HDT **12**. The 6 CXMUs **56** include three pairs of CXMUs **56** with each pair providing for transmit is a 6 MHz bandwidth. Each pair of CXMUs **56** includes one active CXMU and a standby CXMU. Thus, one to one protection for each CXMU is provided. As shown in **FIG. 3**, both CXMUs of the pair are provided with upstream telephony data from the upstream telephony receiver **16** and are capable of transmitting via the coaxial line **22** to the downstream telephony transmitter **14**. As such, only a control signal is required to provide for the one-to-one protection indicating which CXMU **56** of the pair is to be used for tranmission or reception.

[0243] Coax Master Card Logic (CXMC)

[0244] The coax master card logic **80** (CXMC) of the CXMU **56** (**FIG. 12**), provides the interface between the data signals of the HDT **12**, in particular of the CTSU **54**, and the modem interface for transport of data over the HFC distribution network **11**. The CXMC **80** interfaces directly to the MCC modem **82**. The CXMC **80** also implements an ISU operations channel transceiver for multi-point to point operation between the HDT **12** and all ISUs **100** serviced in the 6 MHz bandwidth in which the CXMU **56** controls transport of data within. Referring to **FIG. 12**, the CXMC includes controller and logic **84**, downstream data conversion **88**, upstream data conversion **90**, data integrity **92**, IOC transceiver **96**, and timing generator **94**.

[0245] Downstream data conversion **88** performs the conversion from the nine-bit channel format from CTSU **54** (**FIG. 9**) to the ten-bit channel format (**FIG. 10**) and generates the data integrity bit in each down channel transported over the HFC distribution network **11**. The data integrity bit represents odd parity. Downstream data conversion **88** is comprised of at least a FIFO buffer used to remove the 32 gap bits **72**, **74** (**FIG. 9**) present in the downstream CTSU outputs and insert the tenth data integrity bit, on each channel under control of controller and logic **84**.

[0246] The upstream data conversion **90** includes at least a FIFO buffer which evaluates the tenth bit (data integrity) appended to each of the upstream channels and passes this information to the data integrity circuitry **92**. The upstream data conversion **90** converts the data stream of ten-bit channels (**FIG. 10**) back to the nine-bit channel format (**FIG. 9**) for application to CTSU **54**. Such conversion is performed under control of controller and logic **84**.

[0247] The controller and logic **84** also manages call processing and channel allocation for the telephony transport over the HFC distribution network **11** and maintains traffic statistics over the HFC distribution network **11** in modes where dynamic time-slot allocation is utilized, such as for providing TR-303 services, concentration services commonly known to those skilled in the art. In addition, the controller **84** maintains error statistics for the channels in the 6 MHz band in which the CXMU transports data, provides

software protocol for all ISU operations channel communications, and provides control for the corresponding MCC modem **82**.

[**0248**] The data integrity **92** circuitry processes the output of the tenth bit evaluation of each upstream channel by the upstream conversion circuit **90**. In the present system, parity is only guaranteed to be valid on a provisioned channel which has a call in progress. Because initialized and activated ISU transmitters may be powered down when the ISUs are idle, the parity evaluation performed by the CXMC is not always valid. A parity error detected indicates either a transmission error in an upstream channel or a transmission error in a downstream channel corresponding to the upstream channel.

[**0249**] The ISU operations channel (IOC) transceiver **96** of the CXMC **80** contains transmit buffers to hold messages or control data from the controller and logic **84** and loads these IOC control messages which are a fixed total of 8 bytes in length into a 64 kbps channel to be provided to the MCC modem **82** for report on the HFC distribution network **11**. In this implementation, all IOC channels carry the same information at all times. That is, the IOC messages are broadcast simultaneously over all the channels. This allows the use of inexpensive and rugged narrow-band modems in the ISUs, reserving the more expensive and critical wideband models for the HDT, which uses only one modem for an entire 6MHz band, and which can be located centrally in a controlled environment. In the upstream direction, the IOC transceiver receives the 64 kbps channel via the MCC modem **82** which provides the controller and logic **84** with such messages.

[**0250**] The timing generator circuit **94** receives redundant system clock inputs from both the active and protection CTSUs **54** of the HDT **12**. Such clocks include a 2 kHz HFC multiframe signal, which is generated by the CTSU **54** to synchronize the round trip delay on all the coaxial legs of the HFC distribution network. This signal indicates multiframe alignment on the ISU operations channel and is used to synchronize symbol timing and data reconstruction for the transport system. A 8 kHz frame signal is provided for indicating the first "gap" bit of a 2.56 MHz, 32 channel signal from the CTSU **54** to the CXMU **56**. A 2.048 MHz clock is generated by the CTSU **54** to the SCNU **58** and the CXMU **56**. The CXMU **56** uses this clock for ISU operations channel and modem communication between the CXMC **80** and the MCC modem **82**. A 2.56 MHz bit clock is used for transfer of data signals between the DS1Us **48** and CTSUs **54** and the CTSUs **54** and CXMCs **56**. A 20.48 MHz bit clock is utilized for transfer of the 10-bit data channels between the CXMC and the MCC.

[**0251**] Master Coax Card (MCC) Modem

[**0252**] The master coax card (MCC) modem **82** of the CXMU **56** interfaces on one side to the CXMC **80** and on the other side to the telephony transmitter **14** and receiver **16** for transmission on and reception from the HFC distribution network **11**. The MCC modem **82** implements the modem functionality for OFDM transport of telephony data and control data. The block diagram of **FIG. 3** identifies the associated interconnects of the MCC modem **82** for both upstream and downstream communication. The MCC modem **82** is not an independent module in the HDT **12**, as it has no interface to the HDT **12** other than through the CXMC **80** of the CXMU **56**. The MCC modem **82** represents the transport system logic of the HDT **12**. As such, it is responsible for implementing all requirements associated with information transport over the HFC distribution network **11**. Each MCC modem **82** of the CXMUs **56** of HDT **12** is allocated a maximum bandwidth of 6 MHz in the dowstream spectrum for telephony data and control data transport. The exact location of the 6 MHz band is provisionable by the CXMC **80** over the communication interface via the IOC transceiver **96** between the CXMC **80** and MCC modem **82**. The downstream transmission of telephony and control data is in the RF spectrum of about 725 to 800 MHz.

[**0253**] Each MCC modem **82** is allocated a maximum of 6 MHz in the upstream spectrum for receipt of control data and telephony data from the ISUs within the RF spectrum of about 5 to 40 MHz. Again, the exact location of the 6 MHz band is provisionable by the CXMC **80** over the communication interface between the CXMC **80** and the MCC modem **82**.

[**0254**] The MCC modem **82** receives 256 DS**0**+ channels from the CXMC **80** in the form of a 20.48 MHz signal as described previously above. The MCC modem **82** transmits this information to all the ISUs **100** using the multicarrier modulation technique based on OFDM as previously discussed herein. The MCC modem **82** also recovers 256 DS**0**+ multicarrier channels in the upstream transmission over the HFC distribution network and converts this information into a 20.48 Mbps stream which is passed to CXMC **80**. As described previously, the multicarrier modulation technique involves encoding the telephony and control data, such as by quadrature amplitude modulation, into symbols, and then performing an inverse fast Fourier transform technique to modulate the telephony and control data on a set of orthogonal multicarriers.

[**0255**] Symbol alignment is a necessary requirement for the multicarrier modulation technique implemented by the MCC modem **82** and the ISU modems **101** in the ISUs **100**. In the down direction of transmission, all information at an ISU **100** is generated by a single CXMU **56**, so the symbols moldulated on each multicarrier are automatically phase aligned. However, upstream symbol alignment at a receiver of the MCC modem **82** varies due to the multi-point to point nature of the HFC distribution network **11** and the unequal delay paths of the ISUs **100**. In order to maximize receiver efficiency at the MCC modem **82**, all upstream symbols must be aligned within a narrow phase margin. This is done by utilizing an adjustable delay parameter in each ISU **100** such that the symbol periods of all channels received upstream from the different ISUs **100** are aligned at the point they reach the HDT **12**. This is part of the upstream synchronization process and shall be described further below. In addition, to maintain orthogonality of the multicarriers, the carrier frequencies used for the upstream transmission by the ISUs **100** must be frequency locked to the HDT **12**.

[**0256**] Incoming downstream information from the CXMC **80** to the MCC modem **82** is frame aligned to the 2 kHz and 8 kHz clocks provided to the MCC modem **82**. The 2 kHz multi-frame signal is used by the MCC modem **82** to convey downstream symbol timing to the ISUs as described in further detail below. This multiframe clock conveys the channel correspondence and indicates the multi-carrier

frame structure so that the telephony data may be correctly reassembled at the ISU **100**. Two kHz represents the greatest common factor between 10 kHz (the modem symbol rate) and 8 kHz (the data frame rate).

[**0257**] All ISUs **100** will use the synchronization information inserted by the associated MCC modem **82** to recover all downstream timing required by the ISUs **100**. This synchronization allows the ISUs **100** to demodulate the downstream information and modulate the upstream transmission in such a way that all ISU **100** transmissions received at the HDT **12** are synchronized to the same reference. Thus, the carrier frequencies used for all ISU **100** upstream transmission will be frequency locked to the HDT **12**.

[**0258**] The symbol alignment is performed over synchronization channels in the downstrem and upstream 6 MHz bandwidths under the responsibility of the MCC modem **82**, in addition to providing path delay adjustment, initialization and activation, and provisioning over such synchronization channels until initialization and activation is complete as further described herein. These parameters are then tracked by use of the IOC channels. Because of their importance in the system, the IOC channel and synchronization channels may use a different modulation scheme for transport of control data between the MCC modem **82** and ISUs **100** which is more robust or of lesser order (less bits/sec/Hz or bits/symbol) than used for transport of telephony data. For example, the telephony data may be modulated using quadrature amplitude modulation, while the IOC channel and synchronization channel may be modulated utilizing BPSK modulation techniques.

[**0259**] The MCC modem **82** also demodulates telephony and control data modulated on multicarriers by the ISUs **100**. Such demodulation is described further below with respect to the various embodiments of the telephony transport system.

[**0260**] Functions with respect to the OFDM transport system for which the MCC modem **82** is responsible, include at least the following, which are further described with respect to the various embodiments in further detail. The MCC modem **82** detects a received amplitude/level of a synchronization pulse/pattern from an ISU **100** within a synchronization channel and passes an indication of this level to the CXMC **80** over the communication interface therebetween The CXMC **80** then provides a command to the MCC modem **82** for transmission to the ISU **100** being leveled for adjustment of the amplitude level thereof. The MCC modem **82** also provides for symbol alignment of all the upstream multicarriers by correlating an upstream pattern modulated on a synchronization channel with respect to a known symbol boundary and passing a required symbol delay correction to the CXMC **80** over the communication interface therebetween. The CXMC **80** then transmits via the MCC modem **82** a message down to the ISU **100** to adjust the symbol delay of the ISU **100**.

[**0261**] Likewise, with regard to synchronizing an ISU **100** for overall path delay adjustment, the MCC modem **82** correlates an multiframe pattern modulated in the proper bandwidth by the ISU **100** on the IOC channel with respect to a known reference boundary, and passes a required path delay correction to the CXMC **80** over the modem interface therebetween. The CXMC **80** transmits via the MCC modem **82** over the IOC channel a message downstream to adjust the overall path delay of an ISU **100**.

[**0262**] Summary of Bidirectional Multi-Point to Point Telephony Transport

[**0263**] The following summarizes the transport of telephony and control information over the HFC distribution network **11**. Each CXMU **56** of HDT **12** is provisioned with respect to its specific upstream and downstream opening frequencies. The bandwidth of both upstream and downstream transmission by the CXMU **56** are a maximum of 6 MHz with the downstream transmission in a 6 MHz band of the RF spectrum of about 725-800 MHz.

[**0264**] In the downstream direction, each MCC modem **82** of the CXMU **56** provides electrical telephony and control data signals to the downstream telephony transmitter **14** via coaxial line **22** in its provisional 6 MHz bandwidth. The RF electrical telephony and control data signals from the MCC modems **82** of the HDT **12** are combined into a composite signal. The downstream telephony transmitter then passes the combined electrical signal to redundant electrical-to-optical converters for modulation onto a pair of protected downstream optical feeder lines **24**.

[**0265**] The downstream optical feeder lines **24** carry the telephony information and control data to an ODN **18**. At the ODN **18**, the optical signal is converted back to electrical and combined with the downstream video information (from the video head-end feeder line **42**) into an electrical downstream RF output signal. The electrical RF output signal including the telephony information and control data is then fed to the four coaxial distribution legs **30** by ODN **18**. All telephony information and control data downstream is broadcast on each coaxial leg **30** and carried over the coaxial portion of the HFC distribution network **11**. The electrical downstream output RF signal is tapped from the coax and terminated on the receiver modem **101** of an ISU **100** through diplex filter **104**, shown in **FIG. 8**.

[**0266**] The RF electrical output signals include telephony information and control data modulated on orthogonal multicarriers by MCC modem **82** utilizing orthogonal frequency division multiplexing techniques; the telephony information and control data being mapped into symbol data and the symbols being modulated on a plurality of orthogonal carriers using fast Fourier transform techniques. As the symbols are all modulated on carriers at a single point to be transmitted to multiple points in the system **10**, orthogonality of the multicarriers and symbol alignment of the symbols modulated on the orthogonal multicarriers are automatically aligned for transport over the HFC distribution network **11** and the telephony information and control data is demodulated at the ISUs **100** by the modem **101**.

[**0267**] The ISU **100** receives the RF signal tapped from the coax of the coaxial portion of the HFC network **11**. The RF modem **101** of the ISU **100** demodulates the signal and passes the telephony information and control data extracted to the CXSU controller **102** for provision to channel units **103** as appropriate. The ISU **100** represents the interface where the telephony information is converted for use by a subscriber or customer.

[**0268**] The CXMUs **56** of the HDT **12** and the ISUs **100** implement the bidirectional multi-point to point telephony transport system of the communication system **10**. The

CXMUs **56** and the ISUs, therefore, carry out the modem functionality. The transport system in accordance with the present invention may utilize three different modems to implement the modem functionality for the transport system. The first modem is the MCC modem **82** which is located in each CXMU **6** of the HDT **12**. The HDT **12**, for example, includes three active MCC modems **82** (**FIG. 3**) and is capable of supporting many ISUs **100**, representing a multi-point to point transport network. The MCC modem **82** coordinates telephony information transport as well as control data transport for controlling the ISUs **100** by the HDT **12**. For example, the control data may include call processing messages, dynamic allocation and assignment messages, ISU synchronization control messages, ISU modem control messages, channel unit provisioning, and any other ISU operation, administration, maintenance and provisioning (OAM&P) information.

[**0269**] The second modem is a single family subscriber or HISU modem optimized to support a single dwelling residential unit. Therefore, it must be low in cost and low in power consumption. The third modem is the multiple subscriber or MISU modem which is required to gently support both residential and business services.

[**0270**] The HISU modem and the MISU modem may take several forms. For example, the HISU modem and the MISU modem may, as described further in detail below with regard to the various embodiments of the present invention, extract only a small portion of the multicarriers transmitted from the HDT **12** or a larger portion of the multicarriers transmitted from the HDT **12**. For example, the HISU may extract 20 multicarriers or 10 payload channels of telephony information transported from the HDT **12** and the MISU may extract information from 260 multicarriers or 130 payload channels transported from the HDT **12**. Each of these modems may use a separate receiver portion for extracting the control data from the signal transported by the HDT **12** and an additional receiver portion of the HISU modem to extract the telephony information modulated on the multicarriers transported from the HDT **12**. This shall be referred to hereinafter as an out of band ISU modem. The MCC modem **82** for use with an out of band ISU modem may modulate control information within the orthogonal carrier waveform or on carriers somewhat offset from such orthogonal carriers. In contrast to the out of band ISU modem, the HISU and MISU modems may utilize a single receiver for the ISU modem and extract both the telephony information and control data utilizing the single receiver of the modem. This shall be referred to hereinafter as an in-band ISU modem. In such a case, the control data is modulated on carriers within the orthogonal carrier waveform but may utilize different carrier modulation techniques. For example, BPSK for modulation of control data on the carriers as opposed to modulation of telephony data on payload carriers by QAM techniques. In addition, different modulation techniques may be used for upstream or downstream transmission for both control data and telephony data. For example, downstream telephony data may be modulated on the carriers utilizing 256 QAM and upstream telephony data may be modulated on the carriers utilizing 32 QAM. Whatever modulation technique is utilized for transmission dictates what demodulation approach would be used at the receiving end of the transport system. Demodulation of the downstream telephony information and control data transported by the HDT **12** shall be explained in further detail below with reference to block diagrams of different modem embodiments.

[**0271**] In the upstream direction, each ISU modem **101** at an ISU **100** transmits upstream on at least one orthogonal multicarrier in a 6 MHz bandwidth in the RF spectrum of about 5 to 40 MHz; the upstream 6 MHz band corresponding to the downstream 6 MHz band in which transmissions are received. The upstream electrical telephony and control data signals are transported by the ISU modems **101** to the respectively connected optical distribution node **18** as shown in **FIG. 1** via the individual coaxial cable legs **30**. At the ODN **18**, the upstream signals from the various ISUs are combined and transmitted optically to the HDT **12** via optical feeder lines **26**. As previously discussed, the upstream electrical signals from the various ISUs may, in part, be frequency shifted prior to being combined into a composite upstream optical signal. In such a case, the telephony receiver **16** would include corresponding down-shifting circuitry.

[**0272**] Due to the multi-point to point nature of transport over the HFC distribution network **11** from multiple ISUs **100** to a single HDT **12**, in order to utilize orthogonal frequency division multiplexing techniques, symbols modulated on each carrier by the ISUs **100** must be aligned within a certain phase margin. In addition, as discussed in further detail below, the round trip path delay from the network interface **62** of the HDT **12** to all ISUs **100** and back from the ISUs **100** to the network interface **62** in the communication system **10** must be equal. This is required so that signaling multiframe integrity is preserved throughout the system. In addition, a signal of proper amplitude must be received at the HDT **12** to perform any control actions with respect to the ISU **100**. Likewise, with regard to OFDM transport from the ISUs **100**, the ISUs **100** must be frequency locked to the HDT **12** such that the multicarriers transported over the HFC distribution network **11** are orthogonally aligned. The transport system implements a distributed loop technique for implementing this multi-point to point transport utilizing orthogonal frequency division multiplexing as further described below. When the HDT **12** receives the plurality of multicarriers which are orthogonally aligned and which have telephony and control data modulated thereon with symbols aligned, the MCC modems **82** of the CXMUs **56** demodulate the telephony information and control data from the plurality of multicarriers in their corresponding 6 MHz bandwidth and provide such telephony data to the CTSU **54** for delivery to the network interface **62** and the control data to the CXMC **80** for control of the telephony transport.

[**0273**] As one skilled in the art will recognize, the spectrum allocations, frequency assignments, data rates, channel numbers, types of services provided and any other parameters or characteristics of the system which may be a choice of design are to be taken as examples only. The invention as described in the accompanying claims contemplates such design choices and they therefore fall within the scope of such claims. In addition, many functions may be implemented by software or hardware and either implementation is contemplated in accordance with the scope of the claims even though reference may only be made to implementation by one or the other.

First Embodiment of Telephony Transport System

[0274] The first embodiment of the telephony transport system in accordance with the present invention shall be described with particular reference to FIGS. **13-35** which include block diagrams of MCC modems **82**, and HISU modems and MISU modems shown generally as ISU modem **101** in **FIG. 8**. Such modems implement the upstream and downstream modem transport functionality. Following this description is a discussion on the theory of operation utilizing such modems.

[0275] Referring to **FIG. 13**, the spectrum allocation for one 6 MHz band for upstream and downstream transport of telephony information and control data utilizing OFDM techniques is shown. The waveform preferably has 240 payload channels or DS**0**+ channels which include 480 carriers or tones for accommodating a net data rate of 19.2 Mbps, 24 IOC channels including 46 carriers or tones, and 2 synchronization channels. Each synchronization channel includes two carriers or tones and is each offset from 24 IOC channels and 240 payload channels by 10 unused carriers or tones, utilized as guard tones. The total carriers or tones is 552. The synchronization tones utilized for synchronization functions as described further below are located at the ends of the 6 MHz spectrum and the plurality of orthogonal carriers in the 6 MHz band are separated from carriers of adjacent 6 MHz bands by guard bands (516.0 kHz) at each end of the 6 MHz spectrum. The guard bands are provided at each end of the 6 MHz band to allow for filter selectivity at the transmitter and receivers of the system. The synchronization carriers are offset from the telephony data or payload carriers such that if the synchronization carrier utilized for synchronization during initialization and activation is not orthogonal with the other tones or carriers within the 6 MHz band, the synchronization signal is prevented from destroying the structure of the orthogonally aligned waveform. The synchronization tones are, therefore, outside of the main body of payload carriers of the band and interspersed IOC channels, although the synchronization channel could be considered a special IOC channel.

[0276] To minimize the power requirement of the ISUs, the amount of bandwidth that an ISU processes is minimized. As such the telephony payload channels and IOC channels of the 6 MHz band are interspersed in the telephony payload channels with an IOC channel located every 10 payload channels. With such a distributed technique, wherein subbands of payload channels greater than 10 include an IOC channel, the amount of bandwidth an ISU "sees" can be limited such that an IOC channel is available for the HDT **12** to communicate with the ISU **100**. Such subband distribution for the spectral allocation shown in **FIG. 13** is shown in **FIG. 16**. There are 24 subbands in the 6 MHz bandwidth with each subband including 10 payload channels with an IOC channel between the 5th and 6th payload channels. A benefit of distributing the IOC channels throughout the 6 MHz band is protection from narrow band ingress. If ingress destroys an IOC channel, there are other IOC channels available and the HDT **12** can re-tune an ISU **100** to a different portion of the 6 MHz band, where an IOC channel that is not corrupted is located.

[0277] Preferably, the MISU **66** sees approximately 3 MHz of the 6 MHz bandwidth to receive up to 130 payload channels which bandwidth also includes numerous IOC channels for communication from the HDT **12** to the MISU **66**. The HISU **68** sees about 100 kHz of the 6 MHz bandwidth to receive 11 channels including at least one IOC channel for communication with the HDT **12**.

[0278] The primary difference between the downstream and upstream paths are the support of downstream synchronization and upstream synchronization. In the downstream direction, all ISUs lock to information from the HDT (point to multi-point). The initialization and activation of ISUs are based on signals supplied in the upstream synchronization channel. During operation, ISUs track the synchronization via the IOC channels. In the upstream, the upstream synchronization process involves the distributed (multi-point to point) control of amplitude, frequency, and timing; although frequency control can also be provided utilizing only the downstream synchronization channel as described further below. The process of upstream synchronization occurs in one of the two upstream synchronization channels, the primary or the secondary synchronization channel.

[0279] Referring to **FIG. 21**, the downstream transmission architecture of the MCC modem **82** is shown. Two serial data inputs, approximately 10 Mbps each, compromise the payload data from the CXMC **56** which is clocked by the 8 kHz frame clock input. The IOC control data input from the CXMC **56** is clocked by the IOC clock input, which is preferably a 2.0 kHz clocks. The telephony payload data and the IOC control data enter through serial ports **132** and the data is scrambled as known to one skilled in the art by scrambler **134** to provide randomness in the waveform to be transmitted over the HFC distribution network **11**. Without scrambling, very high peaks in the waveform may occur, however, if the waveform is scrambled the symbols generated by the MCC modem **82** become sufficiently random and such peaks are sufficiently limited.

[0280] **FIG. 58** details the operation of a typical scrambler, such as **134**, **FIG. 21**. Symbol clock **4501** clocks a seed pattern through a linear-feedback shift register **4510** having nine stages, **4510-0** through **4510-8**. With XOR gate **4511** positioned as shown, the generator polynomial is binary "100 010 000". The seed initially loaded into register **4510** at input **4502** is "111 001 110". Two identical translation tables **4520** and **4521** receive two-bit inputs from register **4510** at every symbol time. The high- and low-order bits of table **4520** proceed from the outputs of stages **4510-7** and **4510-6**, respectively. High-order bit **4523** of table **4521** also receives output **4510-6**, but as its high-order bit; stage output **4510-5** provides its low-order bit. Logic gates 4530 perform an XOR between the five-bit output of table **4520** and the upper five bits of a 10-bit DS**0** word, while gates **4531** do the same for the lower five bits of the same DS**0** word. Outputs **4505** and **4506** carry the two 5-bit scrambled symbols for the DS**0** word. Each descrambler such as **176**, **FIG. 22** or **23**, is identical to its corresponding scrambler. It recovers the original bit pattern of each symbol by decoding it with the same polynomial and seed.

[0281] The polynomial and seed for register **4510** of the scramblers and descramblers selected by known techniques to yield a maximal-length pseudo-random sequence. Inversion of the order of the input bits as between table **4520** and table **4521** increases the scrambling of the two symbols of the DS**0** word. To increase the randomness among different sequences seen more, different scramblers in the system

have different polynomials and seeds. Randomness could be further increased by using more than four different table entries; however, the added complexity overrode the gain, for this particular embodiment. Only the payload channels are scrambled; the IOC channels are not scrambled.

[0282] The scrambled signals are applied to a symbol mapping function **136**. The symbol mapping function **136** takes the input bits and maps them into a complex constellation point. For example, if the input bits are mapped into a symbol for output of a BPSK signal, every bit would be mapped to a single symbol in the constellation as in the mapping diagram for BPSK of **FIG. 15**. Such mapping results in in-phase and quadrature values (I/Q values) for the data. BPSK is the modulation technique preferably used for the upstream and downstream IOC channels and the synchronization channels. BPSK encoding is preferred for the IOC control data so as to provide robustness in the system as previously discussed. For QPSK modulation, every two bits would map into one of four complex values that represent a constellation point. In the preferred embodiment, 32 QAM is utilized for telephony payload data, wherein every five bits of payload data is mapped into one of 32 constellation points as shown in **FIG. 14**. Such mapping also results in I/Q values. As such, one DS**0**+ signal (10 bits) is represented by two symbols and the two symbols are transmitted using two carriers. Thus, one DS**0**+ channel is transported over two carriers or tones of6 MHz spectrum.

[0283] One skilled in the art will recognize that various mapping or encoding techniques may be utilized with different carriers. For example, telephony channels carrying ISDN may be encoded using QPSK as opposed to telephony channels carrying POTS data being encoded using 32 QAM. Therefore, different telephony channels carrying different services may be modulated differently to provide for more robust telephony channels for those services that require such quality. The architecture in accordance with the present invention provides the flexibility to encode and modulate any of the channels differently from the modulation technique used for a different channel.

[0284] Within the framework of QAM32 modulation, **FIG. 17** shows a constellation which has improved characteristics. Here, the in-phase and quadrature values are shown encoded by three bits each instead of the four shown in **FIG. 13**; their analog values, however, they remain in the ranges −5 to +5. The constellation of **FIG. 17** approaches as closely as possible to an analogy to a Gray code scheme, in which a transition from one row to the next and from one column to the next result in only a single bit change in the 5-bit symbol code. (exceptions are four transitions from the first column to the second, and from the fifth to the sixth, which have two transitions each. The corner cells have zero transitions between these columns, which do not detract from the advantages of the scheme.) If a symbol is received incorrectly after transmission, the most likely error is a slight change in either amplitude or phase. If the bit strings represented by the symbols have as few bit transitions as possible for single-value phase and amplitude changes, then a reception error will create fewer bit errors on the final digital output. That is, small (symbol) errors in produce small (bit) errors out.

[0285] The constellations shown in **FIGS. 14 and 17** use all points of a six-cell square except the four corners. Hence, they have two axes of symmetry, and appear identical when rotated by 90°, 180°, and 270°. If a phase error ever exceeds 45°, an attempted correction may pull the phase to an incorrect orientation. This is called four-fold phase ambiguity. However, deliberately using one and only one of the corner points as a valid symbol provides a key for identifying the correct phase for errors as great as a full 180°. For example, designating the symbol for "16" as I=010 (+5) and Q=010 (+5) instead of the I=001, Q=010 (+3, +5) in **FIG. 17** introduces a symbol at this corner point whenever a "16" is sent upstream or downstream. Because only one corner is used, any received value having both I and Q values ±5 requires phase rotation until I=+5 and Q=+5. This assignment also preserves the nearly Gray-code structure of the constellation.

[0286] Any other symbol assignment which breaks the symmetry of the constellation would produce the same effect. Even a constellation retaining only one axis of symmetry would allow twice the phase-correction range of the constellation of **FIG. 17**. For example, using both the upper left and lower right corners as valid symbols allows correction of phase errors up to 90°.

[0287] Each symbol that gets represented by the I/Q values is mapped into a fast Fourier transform (FFT) bin of symbol buffer **138**. For example, for a DS**0**+, running at 8 kHz frame rate, five bits are mapped into one FFT bin and five bits into another bin. Each bin or memory location of the symbol buffer **138** represents the payload data and control data in the frequency domain as I/Q values. One set of FFT bins gets mapped into the time domain through the inverse FFT **140**, as is known to one skilled in the art. The inverse FFT **140** maps the complex I/Q values into time domain samples corresponding to the number of points in the FFT. Both the payload data and IOC data are mapped into the buffer **138** and transformed into time domain samples by the inverse FFT **140**. The number of points in the inverse FFT **140** may vary, but in the preferred embodiment the number of points is 256. The output of the inverse FFT **140**, for a 256 point FFT, is 256 time domain samples of the waveform.

[0288] In conventional practice, buffer **138** clocks symbols into inverse FFT **140** at exactly the same rate that inverse FFT **140** clocks out the in-phase and quadrature values FFT I and FFT Q in **FIG. 21**. To put the matter another way, the 256 digital waveform samples from buffer **138** represent 360°, or 2π radians, of a QAM **32** waveform having the amplitude and phase of the 5 bits of its symbol, as determined by mapping unit **136**. The FFT I and Q outputs represent 256 samples of a frequency spectrum corresponding to the same time period. At the receiving end, however, any misalignment at all in the phase synchronization causes FFT **170**, **FIG. 22**, or **180**, **FIG. 23**, to decode a portion of a previous or subsequent symbol's waveform along with somewhat less than the full cycle of the desired symbol; this intersymbol interference can cause misreading the symbol as a different valid symbol, resulting in as many as five bit errors.

[0289] In a presently preferred embodiment, the 256 samples clocked into inverse FFT **140** represent an extra 45° ($\pi/4$ radians) above a complete cycle. Another way to think of this is that the symbols are clocked into the FFT at an effective 9 kHz rate, and clocked out at the nominal 8 kHz symbol rate. **FIG. 52** shows an unmodulated sine wave, i.e.,

one having I=0, Q=0 in the units used herein. The upper portion shows one cycle, 0-360°, at the nominal 8 kHz frame rate. The lower portion shows the same wave at a 9 kHz rate, so that the amount of time previously occupied by 360° now takes up 405° of phase—from −22.5° to +382.5°. Obviously, there are phase discontinuities between successive cycles of the wave. **FIG. 53** shows a typical QAM **32** wave modulated at a different amplitude and a slightly different phase from those of **FIG. 52**. These might correspond to, say, I=−1, Q=+1 in the scheme used herein. The small portions at the ends of this wave represent unmodulated cycles, as in **FIG. 52**. The phase of this wave is advanced from the corresponding wave of the lower portion of **FIG. 52**; it does not cross the zero axis at 0° and 180° of its proper cycle. It does, however, include the extra 22.5° of excess phase at each end, for 45° extra over an 8 kHz cycle. Again, a phase discontinuities exist at the ends of the total 405° phase degrees of this wave.

[**0290**] In fact, this characteristic gives the excess-phase improvement an advantage over its primary function of providing a guard band for the symbol decoder, for reducing intersymbol interference. In **FIG. 52**, successive cycles of a wave modulated with the same symbol (or with no symbol), produce a continuous waveform with no breaks or other features to distinguish the beginnings and endings of individual cycles. The lower part of this diagram demonstrates that even an unmodulated excess-phase waveform contains continuity feature serving as markers at the ends of each cycle. A repeating string of idle symbols, or any other symbols, likewise produces these markers. In the frequency- and phase-acquisition and tracking aspects discussed below, such markers therefore provide definite waveform features for synchronizing purposes, without having to guarantee the transmission of any special string of varying characters strictly for synchronization. This saves the overhead of interrupting the payload and/or IOC channels to provide such a string, and the complexity of storing or diverting payload information while the sync string is present. It also allows sync to take place at times when, because of the above factors, it would not be feasible otherwise.

[**0291**] At the receiving end, FFT **170** (in an MISU) or **180** (HISU) decodes the 256 time slots for one frame time as 405° of a cycle to symbol decoder **174**, which matches the cycle to the nearest 5-bit string of bits. Because any phase difference up to ±22.5° will never conflate the proper wave with that for another symbol, no intersymbol interference at all occurs within this margin of error in phase tracking. This provides a form of guard band for each symbol. In the upstream direction, units **186**, **188**, and **190** or **191** provide excess phase in the transmitting MISU and HISU modems of **FIGS. 24 and 25**; and the head-and receiving modem of **FIG. 26** decodes and tracks this phase as described above.

[**0292**] The inverse FFT **140** has separate serial outputs for in-phase and quadrature (I/Q) components, FFT**1** and FFT**0**. Digital to analog converters **142** take the in-phase and quadrature components, which is a numeric representation of baseband modulated signal and convert it to a discrete waveform. The signal then passes through reconstruction filters **144** to remove harmonic content. This reconstruction is needed to avoid problems arising from multiple mixing schemes and other filtering problems. The signal is summed in a signal conversion transmitter **146** for up-converting the I/Q components utilizing a synthesized waveform that is digitally tunable with the in-phase and quadrature components for mixing to the applicable transmit frequency. For example, if the synthesizer is at 600 MHz the output frequency will be at 600 MHz. The components are summed by the signal conversion transmitter **146** and the waveform including a plurality of orthogonal carriers is then amplified by transmit amplifier **148** and filtered by transmitter filter **150** before being coupled onto the optical fiber by way of telephony transmitter **14**. Such functions are performed under control of general purpose processor **149** and other processing circuitry of block **147** necessary to perform such modulation. The general purpose processor also receives ISU adjustment parameters from carrier, amplitude, timing recovery block **222** (**FIG. 26**) for carrying out distributed loop symbol alignment, frequency locking, amplitude adjustment, and path delay functions as described further below.

[**0293**] In conventional practice, the relationship between the frequency of a carrier and the frequency and timing of data symbols modulated onto that carrier is arbitrary and unimportant. In the present system, however, it has been found that even very small frequency drifts between the 8 kHz symbol or flame clock and the frequencies of the tones upon which they ride can produce significant intersymbol interference and distortion at the receiving end. Such drifts tend to destroy the orthogonality of the channel signals produced by inverse FFT **140** in **FIG. 21**. The present system also, however, provides a simple, inexpensive way to overcome this problem. **FIG. 51** shows a portion **4200** of the HDT clock/sync logic in CTSU **54**, **FIG. 3**. Timing recovery loop **4210** produces a single master reference clock output at 10.24 MHz. Although loop **4210** could be a free-running oscillator, it is in fact slaved to the network **10**, **FIG. 1**. With which the entire system communicates. This connection is convenient in eliminating gross or unpredictable differences between the data speeds of the network and the system.

[**0294**] Smoothing loop **4220** evens out short-term variations in the signal from loop **4210**. Phase comparator **4221** controls a voltage-controlled crystal oscillator at 40.96 MHz; divider **4223** provides feedback at the proper frequency. Comparator **4221** includes a low-pass integrator which gives phase-lock loop **4220** a bandwidth of about 130 Hz. Divider **4230** reduces the frequency of VCXO **4222** to 2.56 Mhz. A second phase-lock loop **4240** has a phase comparator **4241**, again with low-pass characteristics, feeding a voltage-controlled oscillator running at 1267.2 MHz; divider provides feedback at the proper frequency. Divider **4250** produces the final RF clock frequency, 9.9 MHz, at output **4251**. The network clock is sufficiently accurate over long periods of time, but it is subject to significant amounts of short-period jitter. The large amount of smoothing provided by loops **4220** and **4240** overcome the intolerance of analog RF components for short-term variations.

[**0295**] Meanwhile, digital divider **4260** divides the master 10.24 MHz clock by a factor of 80 to produce an 8 kHz symbol or frame clock output **4261**. Output **4261** does not require the smoothing, because it clocks only digital circuits, which are relatively insensitive to short-term frequency changes.

[**0296**] RF master clock **4261** proceeds to RF synthesizer **143** in HDT transmitting modem **82**, as shown in **FIG. 21**, where it directly controls the frequency of the tunable

500-850MHz RF carrier for the entire band carrying all of the channels shown in **FIGS. 13 and 16**. Symbol clock **4261** proceeds to the frame-clock inputs in **FIG. 21**, where it controls the symbol timing, and, because it also controls the FFT speed, the frequencies of the channels in the entire band. Clock lock **4200** thus provides a solid link which inherently preserves the orthogonality of the band signals in a multicarrier system, by deriving the RF carrier clock and the symbol or frame clock from the same source. At the same time, it provides a small amount of gradual variation for satisfying the demands of the analog RF components.

[**0297**] The overall purpose of locking the two clocks together at the HDT is to lock the carrier clocks and the symbol (frame) clocks throughout the system; and the purpose of this in turn is to preserve the orthogonality of the signals in a multicarrier system which is capable of bidirectional operation: that is, as a multipoint-to-point-configuration as well as in the usual point-to-multipoint "broadcast" direction. Clock generator **166**, **FIGS. 22 and 23**, of timing generator **107**, **FIG. 6** locks to the frequencies of the incoming signals to provide the clocks used in the remote ISU modules. Therefore, the carrier and frame clocks in each upstream transmitter portion, **FIG. 24**, of remote modem **108**, **FIG. 8**, are also locked to each other, by virtue of being locked to the incoming signal from the HDT.

[**0298**] At the downstream receiving end, either an MISU or an HISU provides for extracting telephony information and control data from the downstream transmission in one of the 6 MHz bandwidths. With respect to the MISU **66**, the MISU downstream receiver architecture is shown in **FIG. 22**. It includes a 100 MHz bandpass filter **152** to reduce the frequency band of the received 600 to 850 MHz total band broadcast downstream. The filtered signal then passes through voltage tuned filters **154** to remove out of band interference and further reduce the bandwidth. The signal is down converted to baseband frequency via quadrature and in-phase down converter **158** where the signal is mixed at complex mixers **156** utilizing synthesizer **157** which is controlled from an output of serial ports **178**. The down converted I/Q components are passed through filters **159** and converted to digital format at analog to digital converters **160**. The time domain samples of the I/Q components are placed in a sample buffer **162** and a set of samples are input to down converter compensation unit **164**. The compensation unit **164** attempts to mitigate errors such as DC offers from the mixers and differential phase delays that occur in the down conversion.

[**0299**] Carrier, amplitude and timing signaling are extracted from the compensated signal by the carrier, amplitude, and timing recovery block **166** by extracting control data from the synchronization channels during initialization and activation of the ISU and the IOC channels during tracking as further described below with reference to **FIG. 33**. The compensated signal in parallel form is provided to fast Fourier transform (FFT) **170** to be converted into a vector of frequency domain elements which are essentially the complex constellation points with I/Q components originally created upstream at the MCC modem **82** for the DSD+ channels which the MISU sees. Due to inaccuracies in channel filtering, an equalizer **172** removes dynamic errors that occur during transmission and reception. Equalization in the upstream receiver and the downstream receiver architectures shall be explained in further detail below with reference to **FIG. 35**. From the equalizer **172**, the complex constellation points are converted to bits by symbol to bit converter **174**, descrambled at descrambler **176** which is a mirror element of scrambler **134**, and the payload telephony information and IOC control data are output by the serial ports **178** to the CXSU **102** as shown in **FIG. 8**. Block **153** includes the processing capabilities for carrying out the various functions as shown therein.

[**0300**] Referring to **FIG. 23**, the HISU **68** downstream receiver architecture is shown. The primary difference been the HISU downstream receiver architecture (**FIG. 23**) and the MISU downstream receiver architecture (**FIG. 22**) is the amount of bandwidth being processed. The front ends of the receivers up to the FFT processing are substantially the same, except during the down conversion, the analog to digital converters **160** can be operated at a much slower rate. For instance, if the bandwidth of the signal being processed is 100 kHz, the sample rate can be approximately 200 kHz. In an MISU processing a 3 MHz, signal, the sample rate is about 6 MHz. Since the HISU is limited to receiving a maximum of 10 DS0+s, the FFT **180** can be of a smaller size. A 32 point FFT **180** is preferably used in the HISU and can be implemented more efficiently, compared to a 128 or 256 point FFT utilizes in the MISU. Therefore, the major difference between these architectures is that the HISU receiver architecture requires substantially less signal processing capability than the MISU receiver and as such has less power consumption Thus, to provide a system wherein power consumption at the remote units is minimized, the smaller band of frequencies seen by the HISU allows for such low consumption. One reason the HISU is allowed to see such a small band of carriers is that the IOC channels are interspersed throughout the 6 MHz spectrum.

[**0301**] Referring to **FIG. 24**, the upstream transmission architecture for the HISU **68** is shown. Th IOC control data and the telephony payload data from the CXSU **102** (**FIG. 8**) is provided to serial ports **182** at a much slower rate in the HISU than in the MISU or HDT transmission architectures, because the HISU supports only 10 DSD+ channels. The HISU upstream transmission architecture implements three important operations. It adjusts the amplitude of the signal transmitted, the timing delay (both symbol and path delay) of the signal transmitted, and the carrier frequency of the signal transmitted. The telephony data and IOC control data enters through the serial ports **182** under control of clocking signals generated by the clock generator **173** of the HISU downstream receiver architecture, and is scrambled by scrambler **184** for the reasons stated above with regard to the MCC downstream transmission architecture. The incoming bits are mapped into symbols, or complex constellation points, including I/Q components in the frequency domain, by bits to symbol converter **186**. The constellation points are then placed in symbol buffer **188**. Following the buffer **188**, an inverse FFT **190** is applied to the symbols to create time domain samples; 32 samples corresponding to the 32 point FFT. A delay buffer **192** is placed on the output of the inverse FFT **190** to provide multi-frame alignment at MCC modem upstream receiver architecture as a function of the upstream synchronization process controlled by the HDT **12**. The delay buffer **192**, therefore, provides a path delay adjustment prior to digital to analog conversion by the digital to analog converters **194** of the in-phase and quadrature components of the output of the inverse FFT **190**. Clock delay **196** provides a fine tune adjustment for the symbol alignment at

the request of IOC control data output obtained by extracting control data from the serial stream of data prior to being scrambled. After conversion to analog components by digital to analog converters **194**, the analog components therefrom are reconstructed into a smooth analog waveform by the reconstruction filters **198**. The upstream signal is then directly up converted by direct converter **197** to the appropriate transmit frequency under control of synthesizer block **195**. Synthesizer block **195** is operated under control of commands from an IOC control channel which provides carrier frequency adjustment commands thereto as extracted in the HISU downstream receiver architecture. The up converted signal is then amplified by transmitter amplifier **200**, filtered by transmitter filter **202** and transmitted upstream to be combined with other signals transmitted by other ISUs **100**. The block **181** includes processing circuitry for carrying out the functions thereof.

[**0302**] Referring to **FIG. 27**, the upstream transmitter architecture for the MISU **66** is shown and is substantially the same as the upstream transmitter architecture of HISU **68**. However, the MISU **66** handles more channels and cannot perform the operation on a single processor as can the HISU **68**. Therefore, both a processor of block **181** providing the functions of block **181** including the inverse FFT **190** and a general purpose processor **206** to support the architecture are needed to handle the increased channel capacity.

[**0303**] Referring to **FIG. 26**, the MCC upstream receiver architecture of each CXMU **56** at the HDT **12** is shown. A 5 to 40 MHz band pass filter **208** filters the upstream signal which is then subjected to a direct down conversion to baseband by mixer and synthesizer circuitry **211**. The outputs of the down conversion is applied to anti-alias filters **210** for conditioning thereof and the output signal is converted to digital format by analog to digital converters **2'2** to provide a time domain sampling of the in-phase and quadrature components of the signal to narrow band ingress filter and FFT **112**. The narrow band ingress filter and FFT **112**, as described below, provides protection against narrow band interference that may affect the upstream transmission.

[**0304**] The ingress filter and FFT **112** protects ten channels at a time, therefore, if ingress affects one of the available 240 DS**0**+s in the 6 MHz spectrum received by MCC modem **82**, a maximum of ten channels will be destroyed from the ingress. The ingress filter and FFT **112** includes a polyphase structure, as will be recognized by one skilled in the art as a common filter technique. It will be further recognized by one skilled in the art that the number of channels protected by the polyphase filter can be varied. The output of the ingress filter and FFT **112** is coupled to an equalizer **214** which provides correction for inaccuracies that occur in the channel, such as those due to noise from reference oscillators or synthesizers. The output symbols of the equalizer **214**, are applied to a symbols to bits converter **216** where the symbols are mapped into bits. The bits are provided to descramblers **218**, which are a mirror of the scramblers of the ISUs **100** and the output of the descramblers are provided to serial ports **220**. The output of the serial ports is broken into two payload streams and one IOC control data stream just as is provided to the MCC downstream transmitter architecture in the downstream direction. Block **217** includes the necessary processing circuitry for carrying out the functions therein.

[**0305**] In order to detect the downstream information, the amplitude, frequency, and timing of the arriving signal must be acquired using the downstream synchronization process. Since the downstream signal constitutes a point to multipoint node topology, the OFDM waveform arrives via a single path in an inherently synchronous manner, in contrast to the upstream signal. Acquisition of the waveform parameters is initially performed on the downstream synchronization channels in the downstream synchronization bands located at the ends of the 6 MHz spectrum. These synchronization bands include a single synchronization carrier or tone which is BPSK modulated by a 2 kHz framing clock. This tone is used to derive initial amplitude, frequency, and timing at the ISU. The synchronization carrier may be located in the center of the receive band and could be considered a special case of an IOC. After the signal is received and the receiver architecture is tuned to a typical IOC channel, the same circuitry is used to track the synchronization parameters using the IOC channel. The process used to acquire the necessary signal parameters utilizes carrier, amplitude and timing recovery block **166** of the ISU receiver architecture, which is shown in more detail in block diagram form in **FIG. 33**. The carrier, amplitude and timing recovery block **166** includes a Costas loop **330** which is used to acquire the frequency lock for the received waveform. After the signal is received from the compensation unit **164**, a sample and hold **334** and analog to digital conversion **332** is applied to the signal with the resulting samples from the converters **332** applied to the Costas loop **330**. The sampling is performed under control of voltage controlled oscillator **340** as divided by divider **333** which divides by the number of points of the FFT utilized in the receiver architecture, M. The mixers **331** of the Costas loop **330** are fed by the arriving signal and the feedback path, and serve as the loop phase detectors. The output of the mixers **331** are filtered and decimated to reduce the processing requirements of subsequent hardware. Given that the received signal is band-limited, less samples are required to represent the synchronization signal. If orthogonality is not preserved in the receiver, the filter will eliminate undesired signal components from the recovery process. Under conditions of orthogonality, the LPF **337** will completely remove effects from adjacent OFDM carriers. When carrier frequency lock is achieved, the process will reveal the desired BPSK waveform in the in-phase arm of the loop. The output of the decimators are fed through another mixer, then processed through the loop filter with filter function H(s) and numerically controlled oscillator (NCO), completing the feedback path to correct for frequency error. When the error is at a "small" level the loop is locked. In order to achieve fast acquisition and minimal jitter during tracking, it will be necessary to employ dual loop bandwidths. System operation will require that frequency lock is achieved and maintained within about ±4% of the OFDM channel spacing (360 Hz).

[**0306**] The amplitude of the signal is measured at the output of the frequency recovery loop at BPSK power detector **336**. The total signal power will be measured and can be used to adjust a numerically controllable analog gain circuit (not shown). The gain circuit is intended to normalize the signal so that the analog to digital converters are used in an optimal operating region.

[**0307**] Timing recovery is performed using an early-late gate type algorithm of early-late gate phase detector **338** to

derive timing error, and by adjusting the sample clock or oscillator **340** in response to the error signal. The early-late gate detector results in an advance/retard command during an update interval. This command will be applied to the sample clock or oscillator **340** through filter **341**. This loop is held off until frequency lock and amplitude lock have been achieved. When the timing loop is locked, it generates a lock indicator signal. The same clocks are also used for the upstream transmission. The carrier, timing and amplitude recovery block **166** provides a reference for the clock generator **168**. The clock generator 168 provides all of the clocks needed by the MISU, for example, the 8 kHz frame clock and the sample clock.

[**0308**] Carrier, amplitude, and timing recovery block **222** of the MCC modem upstream receiver architecture (**FIG. 26**), is shown by the synchronization loop diagram of **FIG. 34**. It performs detection for upstream synchronization on signals on the upstream synchronization channel. For initialization and activation of an ISU, upstream synchronization is performed by the HDT commanding one of the ISUs via the downstream IOC control channels to send a reference signal upstream on a synchronization channel. The carrier, amplitude, and timing recovery block **222** measures the parameters of data from the ISU **100** that responds on the synchronization channel and estimates the frequency error, the amplitude error, and the timing error compared to references at the HDT **12**. The output of the carrier, amplitude, and timing recovery block **222** is turned into adjustment commands by the HDT **12** and sent to the ISU being initialized and activated in the downstream direction on an IOC control channel by the MCC downstream transmitter architecture.

[**0309**] The purpose of the upstream synchronization process is to initialize and activate ISUs such that the waveform from distinct ISUs combine to a unified waveform at the HDT **12**. The parameters that are estimated at the HDT **12** by carrier, amplitude, and timing recovery block **222** and adjusted by the ISUs are amplitude, timing, and frequency. The amplitude of an ISUs signal is normalized so that DS**0**+s are apportioned an equal amount of power, and achieves a desired signal to noise ratio at the HDT **12**. In addition, adjacent ISUs must be received at the correct relative level or else weaker DS**0**+ channels will be adversely impacted by the transient behavior of the stronger DS**0**+ channels. If a payload channel is transmitted adjacent to another payload channel with sufficient frequency error, orthogonality in the OFDM waveform deteriorates and error rate performance is compromised. Therefore, the frequency of the ISU must be adjusted to close tolerances. Timing of the recovered signal also impacts orthogonality. A symbol which is not aligned in time with adjacent symbols can produce transitions within the part of the symbol that is subjected to the FFT process. If the transitions of all symbols don't fall within the guard interval at the HDT, approximately ±16 tones (8 DS**0**+s) relative to the non-orthogonal channel will be unrecoverable.

[**0310**] During upstream synchronization, the ISUs will be commanded to send a signal, for example a square wave signal, to establish amplitude and frequency accuracy and to align symbols. The pattern signal may be any signal which allows for detection of the parameters by carrier, amplitude and timing recovery block **222** and such signal may be different for detecting different parameters. For example, the signal may be a continuous sinusoid for amplitude and frequency detection and correction and a square wave for symbol timing. The carrier, amplitude and timing recovery block **222** estimates the three distributed loop parameters. In all three loops, the resulting error signal will be converted to a command by the CXMC **80** and sent via the MCC modem **82** over an IOC channel and the CXSU will receive the combined and control the adjustment made by the ISU.

[**0311**] As shown in **FIG. 34**, the upstream synchronization from the ISU is sampled and held **434** and analog to digital converted **432** under control of voltage controlled oscillator **440**. Voltage controlled oscillator is a local reference oscillator which is divided by M, the points of the FFT in the receiver architecture, for control of sample and hold **434** and analog to digital converter **432** and divided by k to apply an 8 kHz signal to phase detector **438**.

[**0312**] Frequency error may be estimated utilizing the Costas loop **430**. The Costas loop **430** attempts to establish phase lock with the locally generated frequency reference. After some period of time, loop adaptation will be disabled and phase difference with respect to the time will be used to estimate the frequency error. The frequency error is generated by filter function H(s) **444** and provided to the CXMC **80** for processing to send a frequency adjustment command to the ISU via an IOC control channel. The frequency error is also applied to the numerically controlled oscillator (NCO) to complete the frequency loop to correct for frequency error.

[**0313**] The amplitude error is computed based on the magnitude of the carrier during the upstream synchronization by detecting the carrier amplitude of the in-phase arm of the Costas loop **430** by power detector **436**. The amplitude is compared with a desired reference value at reference comparator **443** and the error will be sent to the CXMC **80** for processing to send an amplitude adjustment command to the ISU via an IOC control channel.

[**0314**] When the local reference in the HDT has achieved phase lock, the BPSK signal on the synchronization channel arriving from the ISU is available for processing. The square wave is obtained on the in-phase arm of the Costas loop **430** and applied to early-late gate phase detector **438** for comparison to the locally generated 8 kHz signal from divider **435**. The phase detector **438** generates a phase or symbol timing error applied to loop filter **441** and output via line **439**. The phase or symbol timing error is then provided to the CXMC **80** for processing to send a symbol timing adjustment command to the ISU via an IOC control channel.

[**0315**] The mechanisms in the ISU which adjust the parameters for upstream synchronization include implementing an amplitude change with a scalar multiplication of the time domain waveform as it is being collected from the digital processing algorithm, such as inverse FFT **190**, by the digital to analog converters **194** (**FIG. 24**). Similarly, a complex mixing signal could be created and implemented as a complex multiply applied to the input to the digital to analog converters **194**.

[**0316**] Frequency accuracy of both the downstream sample clock and upstream sample clock, in the ISU, is established by phase locking an oscillator to the downstream synchronization and IOC information. Upstream transmission frequency is adjusted, for example, at synthesizer block **195** as commanded by the HDT **12**.

[0317] Symbol timing corrections are implemented as a delay function Symbol timing alignment in the ISU upstream direction is therefore established as a delay in the sample timing accomplished by either blanking a sample interval (two of the same samples to go out simultaneously) or by putting in an extra clock edge (one sample is clocked out and lost) via clock delay **196 (FIG. 24)**. In this manner, a delay function can be controlled without data storage overhead beyond that already required.

[0318] After the ISU is initialized and activated into the system, ready for transmission, the ISU will maintain required upstream synchronization system parameters using the carrier, amplitude, frequency recovery block **222**. An unused but initialized and activated ISU will be commanded to transmit on an IOC and the block **222** will estimate the parameters therefrom as explained above.

[0319] In both the upstream transmitter architectures for the MISU **66 (FIG. 24)** and the HISU **68 (FIG. 25)**, frequency offset or correction to achieve orthogonality of the carriers at HDT **12** can be determined on the ISU as opposed to the frequency offset being determined at the HDT during synchronization by carrier, amplitude and timing recovery block **222 (FIG. 26)** and then frequency offset adjustment commands being transmitted to the ISU for adjustment of carrier frequency via the synthesizer blocks **195** and **199** of the HISU **68** and MISU **66**, respectively. Thus, frequency error would no longer be detected by carrier, amplitude and timing recovery block **222** as described above. Rather, in such a direct ISU implementation, the ISU, whether an HISU **68** or MISU **66**, estimates a frequency error digitally from the downstream signal and a correction is applied to the upstream data being transmitted.

[0320] The HDT **12** derives all transmit and receive frequencies from the same fundamental oscillator. Therefore, all mixing signals are frequency locked in the HDT. Similarly, the ISU, whether an HISU **68** or MISU **66**, derives all transmit and receive frequencies from the same fundamental oscillator, therefore, all the mixing signals on the ISU are also frequency locked. There is, however, a frequency offset present in the ISU oscillators relative to the HDT oscillators. The amount of frequency error (viewed from the ISU) will be a fixed percentage of the mixing frequency. For example, if the ISU oscillator is 10 PPM off in frequency from the HDT oscillators, and the downstream ISU receiver mix frequency was 100 MHz and the ISU upstream transmit mixing frequency were 10 MHz, the ISU would have to correct for 1 kHz on the downstream receiver and create a signal with a 100 Hz offset on the upstream transmitter. As such, with the ISU direct implementation, the frequency offset is estimated from the downstream signal.

[0321] The estimation is performed with digital circuitry performing numeric calculations, i.e. a processor. Samples of the synchronization channel or IOC channel are collected in hardware during operation of the system. A tracking loop drives a digital numeric oscillator which is digitally mixed against the received signal. This process derives a signal internally that is essentially locked to the HDT. The internal numerical mix accounts for the frequency offset. During the process of locking to the downstream Signal in the ISU, the estimate of frequency error is derived and with the downstream frequency being known, a fractional frequency error can be computed. Based on the knowledge of the mixing frequency at the HDT that will be used to down convert the upstream receive signal, an offset to the ISU transmit frequency is computed. This frequency offset is digitally applied to the ISU transmitted signal prior to converting the signal to the analog domain, such as by converters **194** of **FIG. 24**. Therefore, the frequency correction can be performed directly on the ISU.

[0322] Referring to **FIGS. 31 and 32**, the narrow band ingress filter and FFT **112** of the MCC upstream receiver architecture, including a polyphase filter structure, will be described in further detail. Generally, the polyphase filter structure includes polyphase filters **122** and **124** and provides protection against ingress. The 6 MHz band of upstream OFDM carriers from the ISUs **100** is broken into subbands through the polyphase filters which provide filtering for small groups of carriers or tones, and if an ingress affects carriers within a group of carriers, only that group of carriers is affected and the other groups of carriers are protected by such filtering characteristics.

[0323] The ingress filter structure has two parallel bank **122, 124** of polyphase filters. One bank has approximately 17 different non-overlapping bands with channel spaces between the bands. A magnitude response of a single polyphase filter bank is shown in **FIG. 29**. The second bank is offset from the first bank by an amount so that the channels that are not filtered by the first bank are filtered by the second bank. Therefore, as shown in the closeup magnitude response of a single polyphase filter bank in **FIG. 30**, one band of channels filtered may include those in frequency bins **38-68** with the center carriers corresponding to bins **45-61** being passed by the filter. The overlapping filter provides for filtering carriers in the spaces between the bands and the carriers not passed by the other filter bank. For example, the overlapping filter may pass **28-44**. The two channel banks are offset by 16 frequency bins so that the combination of the two filter banks receives every one of the 544 channels.

[0324] Referring to **FIG. 31**, the ingress filter structure receives the sampled waveform x(k) from the analog to digital converters **212** and then complex mixers **118** and **120** provide the stagger for application to the polyphase filters **122, 124**. The mixer **118** uses a constant value and the mixer **120** uses a value to achieve such offset. The outputs of each mixer enters one of the polyphase filters **122, 124**. The output of each polyphase filter bank comprises 18 bands, each of which contain 16 usable FFT bins or each band supports sixteen carriers at the 8 kHz rate, or 8 DS**0**+s. One band is not utilized.

[0325] Each band output of the polyphase filters **122, 124** has 36 samples per 8 kHz frame including 4 guard samples and enters a Fast Fourier Transform (FFT) block **126, 128**. The first operation performed by the FFT blocks **126, 128** is to remove the four guard samples, thereby leaving 32 time domain points. The output of the each FFT in the blocks is 32 frequency bins, 16 of which are used with the other bins providing filtering. The output of the FFTs are staggered to provide overlap. As seen in **FIG. 31**, carriers **0-15** are output by FFT **#1** of the top bank, carriers **16-31** are output by FFT **#1** of the bottom bank, carriers **32-48** are output by FFT #2 of the top bank and so on.

[0326] The polyphase filters **122, 124** are each standard polyphase filter construction as is known to one skilled in the

art and each is shown by the structure of **FIG. 32**. The input signal is sampled at a 5.184 mega—sample per second rate, or 648 samples per frame. The input is then decimated by factor of 18 (1 of 18 samples are kept) to give an effective sample rate of 288 kHz. This signal is subjected to the finite impulse response (FIR) filters, labeled $H_{0.0}(Z)$ through $H_{0.16}(Z)$, which include a number of taps, preferably 5 taps per filter. As one skilled in the art will recognize the number of taps can vary and is not intended to limit the scope of the invention. The outputs from the filters enter an 18 point inverse FFT **130**. The output of the transform is 36 samples for an 8 kHz frame including 4 guard samples and is provided to FFT blocks **126** and **128** for processing as described above. The FFT tones are preferably spaced at 9 kHz, and the information rate is 8 kilosymbols per second with four guard samples per symbol allotted. The 17 bands from each polyphase filter are applied to the FFT blocks **126, 128** for processing and output of the 544 carriers as indicated above. One band, the 18th band, as indicated above, is not used.

[**0327**] Th equalizer **214 (FIG. 26)** and **172 (FIG. 22)**, in both upstream and downstream receiver architectures, is supplied to account for changes in group delay across the cable plant. The equalizer tracks out phase and gain or amplitude variations due to environmental changes and can therefore adapt slowly while maintaining sufficiently accurate tracking. The coefficients **360** of the equalizer **172, 214**, for which the internal equalizer operation is generally shown in **FIG. 35**, represent the inverse of the channel frequency response to the resolution of the FFT **112, 170**. The downstream coefficients will be highly correlated since every channel will progress through the same signal path as opposed to the upstream coefficients which may be uncorrelated due to the variant channels that individual DS**0**+s may encounter m the multi-point to point topology. While the channel characteristics are diverse, the equalizer will operate the same for either upstream or downstream receiver.

[**0328**] The downstream equalizer will track on only the IOC channels, thus reducing the computational requirements at the ISUs and removing the requirement for a preamble in the payload channels, as described further below, since the IOC channels are always transmitted. The upstream, will require equalization on a per DS**0**+ and IOC channel basis.

[**0329**] The algorithm used to update the equalizer coefficients contains several local minima when operating on a 32 QAM constellation and suffers from a four-fold phase ambiguity. Furthermore, each DS**0**+ in the upstream can emanate from a separate ISU, and can therefore have an independent phase shift. To mitigate this problem, each communication onset will be required to post a fixed symbol preamble prior to data transmission. Note that the IOC channels are excluded from this requirement since they are not equalized and that the preamble cannot be scrambled. It is known that at the time of transmission, the HDT **12** will sill have accurate frequency lock and symbol timing as established during initialization and activation of the ISU and will maintain synchronization on the continuously available downstream IOC channel.

[**0330**] The introduction of the preamble requires that the equalizer have knowledge of its process state. Three states are introduced which include: search, acquisition, and tracking mode. Search mode is based on the amount of power present on a channel. Transmitter algorithms will place a zero value in unused FFT bins, resulting in no power being transmitted on that particular frequency. At the receiver, the equalizer will determine that it is in search mode based on the absence of power in the FFT bin.

[**0331**] When transmission begins for an initialized and activated ISU, the equalizer detects the presence of signal and enters the acquisition mode. The length of the preamble may be about 15 symbols. The equalizer will vary the equalization process based on the preamble. The initial phase and amplitude correction will be large but subsequent updates of the coefficients will be less significant. In order to differentiate the training pattern from any other data sequence, when the HDT informs an ISU to connect a new payload channel, the ISU transmits 16 consecutive symbols having I=0 and Q=0, which is not a valid data symbol in the constellations of FIGS. **14** or **17**. The ISU then transmits 8 valid data symbols, allowing the equalizer for that channel to set its coefficient properly to adjust for amplitude and phase of the incoming signal.

[**0332**] After acquisition, the equalizer will enter a tracking mode with the update rate being reduced to a minimal level. The tracking mode will continue until a loss of power is detected on the channel for a period of time. The channel is then in the unused but initialized and activated state. The equalizer will not train or track when the receiver is being tuned and the coefficients will not be updated. The coefficients may be accessed and used such as by signal to noise detector **305 (FIG. 26)** for channel monitoring as discussed further below.

[**0333**] For the equalization process, the I/Q components are loaded into a buffer at the output of the FFT, such as FFT **112, 180**. As will be apparent to one skilled in the art, the following description of the equalizer structure is with regard to the upstream receiver equalizer **214** but is equally applicable to the downstream receiver equalizer **172**. The equalizer **214** extracts time domain samples from the buffer and processes one complex sample at a time. The processed information is then output therefrom. **FIG. 35** shows the basic structure of the equalizer algorithm less the state control algorithm which should be apparent to one skilled in the art. The primary equalization path performs a complex multiply at multiplier **370** with the value from the selected FFT bin. The output is then quantized at symbol quantize block **366** to the nearest symbol value from a storage table. The quantized value (hard decision) is passed out to be decoded into bits by symbols to bits converter **216**. The remainder of the circuitry is used to update the equalizer coefficients. An error is calculated between the quantized symbol value and the equalized sample at summer **364**. This complex error is multiplied with the received sample at multiplier **363** and the result is scaled by the adaptation coefficient by multiplier **362** to form an update value. The update value is summed at summer **368** with the original coefficient to result in a new coefficient value.

Operation of First Embodiment

[**0334**] In the preferred embodiment, the 6 MHz frequency band for each MCC modem **82** of HDT **12** is allocated as shown in **FIG. 13**. Although the MCC modem **82** transmits and receives the entire 6 MHz band, the ISU modems **100**

(FIG. 8) are optimized for the specific application for which they are designed and may terminate/generate fewer than the total number of carriers or tones allocated in the 6 MHz band. The upstream and downstream band allocations are preferably symmetric. The upstream 6 MHz bands from the MCC modems **82** lie in the 5-40 MHz spectrum and the downstream 6 MHz bands lie in the 725-760 MHz spectrum. One skilled in the art will recognize that if different transmission media are utilized for upstream and downstream transmission, the frequencies for transmission may be the same or overlap but still be non-interfering.

[**0335**] There are the regions in each 6 MHz frequency band to support specific operations, such as transport of telephony payload data, transport of ISU system operations and control data (IOC control data), and upstream and downstream synchronization. Each carrier or tone in the OFDM frequency band consists of a sinusoid which is modulated in amplitude and phase to form a complex constellation point as previously described. The fundamental symbol rate of the OFDM waveform is 8 kHz, and there are a total of 552 tones in the 6 MHz band. The following Table 2 summarizes the preferable modulation type and bandwidth allocation for the various tone classifications.

TABLE 2

Band Allocation	Number of Tones or Carriers	Modulation	Capacity	Bandwidth
Synch Band	24 tones (2 synch tones at each end and 10 guard tones at each end)	BPSK	n/a	216 kHz
Payload Data	480 (240 DSO + channels)	32 QAM	19.2 MBPS	4.32 MHz
IOC	48 (2 every 20 data channels or 24 IOC channels)	BPSK	384 kbps	432 kHz
Intra-band guard	Remainder on each end	n/a	n/a	1.032 MHz (516 kHz at each end)
Composite Signal	552	n/a	n/a	6.0 MHz

[**0336**] Guard bands are provided at each end of the spectrum to allow for selectivity filtering after transmission and prior to reception A total of 240 telephony data channels are included throughout the band, which accommodates a net data rate of 19.2 Mbps. This capacity was designed to account for additive ingress, thereby retaining enough support to achieve concentration of users to the central office. The IOC channels are interspersed throughout the band to provide redundancy and communication support to narrowband receivers located in the HISUs. The IOC data rate is 16 kbps (two BPSK tones at the symbol rate of 8 kHz frames per second). Effectively, an IOC is provided for every 10 payload data channels. An ISU, such as an HISU, that can only see a single IOC channel would be forced to retune if the IOC channel is corrupted. However, an ISU which can see multiple IOC channels can select an alternate IOC channel in the event that the primary choice is corrupt, such as for an MISU.

[**0337**] The synchronization channels are duplicated at the ends of the band for redundancy, and are offset from the main body of usable carriers to guarantee that the synchronization channels do not interfere with the other used channels. The synchronization channels were previously described and will be further described below. The synchronization channels are operated at a lower power level than the telephony payload channels to also reduce the effect of any interference to such channels. This power reduction also allows for a smaller guard band to be used between the synchronization channels and the payload telephony channels.

[**0338**] One synchronization or redundant synchronization channels may also be implemented within the telephony channels as opposed to being offset therefrom. In order to keep them from interfering with the telephony channels, the synchronization channels may be implemented using a lower symbol rate. For example, if the telephony channels are implemented at an 8 kHz symbol rate, the synchronization channels could be implemented at a 2 kHz symbol rate and also may be at a lower power level.

[**0339**] The ISUs **100** are designed to receive a subband, as shown in **FIG. 16**, of the total aggregate 6 MHz spectrum. As an example, the HISU **68** will preferably detect only **22** of the available 552 channels. This implementation is primarily a cost/power savings technique. By reducing the number of channels being received, the sample rate and associated processing requirements are dramatically reduced and can be achievable with common conversion parts on the market today.

[**0340**] A given HISU **68** is limited to receiving a maximum of 10 DS**0**s out of the payload data channels in the HISU receiver's frequency view. The remaining channels will be used as a guard interval. Furthermore, in order to reduce the power/cost requirements, synthesizing frequency steps will be limited to 198 kHz. An IOC channel is provided for as shown in **FIG. 16** so that every HISU **68** will always see an IOC channel for control of the HISU **68** via HDT **12**.

[**0341**] The MISU **66** is designed to receive 13 subbands, as shown in **FIG. 16**, or 130 of the 240 available DS**0**s. Again, the tuning steps will be limited to 198 kHz to realize an efficient synthesizer implementation. These are preferred values for the HISU **68** and MISU **66**, and it will be noted by one skilled in the art that many of the values specified herein can be varied without changing the scope or spirit of the invention as defined by the accompanying claims.

[**0342**] As known to one skilled in the art, there may be need to support operation over channels in a bandwidth of less than 6 MHz. With appropriate software and hardware modifications of the system, such reconfiguration is possible as would be apparent to one skilled in the art. For example, for a 2 MHz system, in the downstream the HDT **12** would generate the channels over a subset of the total band. The HISUs are inherently narrowband and would be able to tune into the 2 MHz band. The MISUs supporting 130 channels, would receive signals beyond the 2 MHz band. They would require reduction in filter selectivity by way of a hardware modification. An eighty (80) channel MISU would be able to operate with the constraints of the 2 MHz system. In the upstream the HISUs would generate signals within the 2 MHz band and the MISUs transmit section would restrict the information generated to the narrower band. At the HDT, the ingress filtering would provide sufficient selectivity against out of band signal energy. The narrowband system would require synchronization bands at the edges of the 2 MHz band.

[0343] As previously described, acquisition of sign parameters for initializing the system for detection of the downstream information is performed using the downstream synchronization channels. The ISUs use the carrier, amplitude, timing recovery block **166** to establish the downstream synchronization of frequency, amplitude and timing for such detection of downstream information. The downstream signal constitutes a point to multi-point topology and the OFDM waveform arrives at the ISUs via a single path in an inherently synchronous manner. In the upstream direction, each ISU **100** must be initialized and activated through a process of upstream synchronization before an HDT **12** can enable the ISU **100** for transmission. The process of upstream synchronization for the ISUs is utilized so that the waveform from distinct ISUs combine to a unified waveform at the HDT. The upstream synchronization process, portions of which were previously described, involves various steps. They include: ISU transmission level adjustment, upstream multicarrier symbol alignment, carrier frequency adjustment, and round trip path delay adjustment. Such synchronization is performed after acquisition of a 6 MHz band of operation.

[0344] Generally, with respect to level adjustment, the HDT **12** calibrates the measured signal strength of the upstream transmission received from an ISU **100** and adjusts the ISU **100** transmit level so that all ISUs are within acceptable threshold. Level adjustment is performed prior to symbol alignment and path delay adjustment to maximize the accuracy of these measurements.

[0345] Generally, symbol alignment is a necessary requirement for the multicarrier modulation approach implemented by the MCC modems **82** and the ISU modems **101**. In the downstream direction of transmission, all information received at the ISU **100** is generated by a single CXMU **56**, so the symbols modulated on each multicarrier are automatically phase aligned. However, upstream symbol alignment at the MCC modem **82** receiver architecture varies due to the multi-point to point nature of the HFC distribution network **11** and the unequal delay paths of the ISUs **100**. In order to have maximum receiver efficiency, all upstream symbols must be aligned within a narrow phase margin. This is done by providing an adjustable delay path parameter in each ISU **100** such that the symbol periods of all channels received upstream from the different ISUs are aligned at the point they reach the HDT **12**.

[0346] Generally, round trip path delay adjustment is performed such that the round trip delay from the HDT network interface **62** to all ISUs **100** and back to the network interface **62** from all the ISUs **100** in a system must be equal. This is required so that signaling multiframe integrity is preserved throughout the system. All round trip processing for the telephony transport section has a predictable delay with the exception of the physical delay associated with signal propagation across the HFC distribution network **11** itself. ISUs **100** located at close physical distance from the HDT **12** will have less round trip delay tha ISUs located at the maximum distance from the HDT **12**. Path delay adjustment is implemented to force the transport system of all ISUs to have equal round trip propagation delay. This also maintains DS1 multiface alignment for DS1 channels transported through the system, maintaining in-band channel signaling or robbed-bit signaling with the same alignment for voice services associated with the same DS1.

[0347] Generally, carrier frequency adjustment must be performed such that the spacing between carrier frequencies is such as to maintain orthogonality of the carriers. If the multicarriers are not received at the MCC modem **82** in orthogonal alignment, interference between the multicarriers may occur. Such carrier frequency adjustment can be performed in a manner like that of symbol timing or amplitude adjustment or may be implemented on the ISU as described previously above.

[0348] In the initiation process, when the ISU has just been powered up, the ISU **100** has no knowledge of which downstream 6 MHz frequency band it should be receiving in. This results in the need for the acquisition of 6 MHz band in the initialization process. Until an ISU **100** has successfully acquired a 6 MHz band for operation, it implements a "scanning" approach to locate its downstream frequency band. Generally, a local processor of the CXSU controller **102** of ISU **100** starts with a default 6 MHz receive frequency band somewhere in the range from 625 to 850 MHz. The ISU **100** waits for a period of time, for example 100 milliseconds, in each 6 MHz band to look for a valid 6 MHz acquisition command which matches a unique identification number for the ISU **100** after obtaining a valid synchronization signal; which unique identifier may take the form of or be based on a serial number of the ISU equipment. If a valid 6 MHz acquisition command or valid synchronization command is not found in that 6 MHz band, the CXSU controller **102** looks at the next 6 MHz band and the process is repeated. In this manner, as explained further below, the HDT **12** can tell the ISU **100** which 6 MHz band it should use for frequency reception and later which band for frequency transmission upstream.

[0349] The process of initialization and activation of ISUs, as generally described above, and tracking or follow-up synchronization is further described below. This description is written using an MISU **66** in conjunction with a CXSU controller **102** but is equally applicable to any ISU **100** implemented with an equivalent controller logic. The coax master card logic (CXMC) **80** is insured by the shelf controller unit (SCNU) **58** to initialize and activate a particular ISU **100**. The SCNU uses an ISU designation number to address the ISU **100**. The CXMC **80** correlates the ISU designation number with an equipment serial number, or unique identifier, for the equipment. No two ISU equipments shipped from the factory possess the same unique identifier. If the ISU **100** has never before been initialized and activated in the current system database, the CXMC **80** chooses a personal identification number (PIN) code for the ISU **100** being initialized and activated. This PIN code is then stored in the CXMC **80** and effectively represents the "address" for all communications with that ISU **100** which will follow. The CXMC **80** maintains a lookup table between each ISU designation number, the unique identifier for the ISU equipment, and the PIN code. Each ISU **100** associated with the CXMU **56** has a unique PIN address code assignment. One PIN address code will be reserved for a broadcast feature to all ISUs, which allows for the HDT to send messages to all initialized and activated ISUs **100**.

[0350] The CXMC **80** sends an initialization and activation enabling message to the MCC modem **82** which notifies the MCC modem **82** that the process is beginning and the associated detection functionality in the MCC modem **82** should be enabled. Such functionality is performed at least

in part by carrier, amplitude, timing recovery block **222** as shown in the MCC upstream receiver architecture of **FIG. 26** and as previously discussed.

[**0351**] The CXMC **80** transmits an identification message by the MCC modem **82** over all IOC channels of the 6 MHz band in which it transmits. The message includes a PIN address code to be assigned to the ISU being initialized nd activated, a command indicating that ISU initialization and activation should be enabled at the ISU **100**, the unique identifier for the ISU equipment, such as the equipment serial number, and cyclical redundancy checksum (CRC). The messages are sent periodically for a certain period of time, T_{SCAN}, which is shown as 6.16 seconds in **FIG. 20** and which is also shown in **FIG. 19**. This period of time is the maximum time which an ISU can scan all downstream 6 MHz bands, synchronize, and listen for a valid identification message. The periodic rate, for example 50 msec, affects how quickly the ISU learns its identity. The CXMC **80** will never attempt to synchronize more than one ISU at a time, but will attempt to identify several ISUs during burst identification as described further below. A software timeout is implemented if an ISU does not respond after some maximum time limit is exceeded. This timeout must be beyond the maximum time limit required for an ISU to obtain synchronization functions.

[**0352**] During periodic transmission by CXMC **80**, the ISU implements the scanning approach to locate its downstream frequency band. The local processor of the CXSU starts with a default 6 MHz receive frequency band somewhere in the range from 625 to 850 MHz. The ISU **100** selects the primary synchronization channel of the 6 MHz band and then tests for loss of synchronization after a period of time. If loss of synchronization is still present, the secondary synchronization channel is selected and tested for loss of synchronization after a period of time. If loss of synchronization is still present, then the ISU restarts selection of the synchronization channels on the next 6 MHz band which may be 1 MHz away but still 6 MHz in width. When loss of synchronization is not present on a synchronization channel then the ISU selects the first subband including the IOC and listens for a correct identification message. If a correct identification message is found which matches its unique identifier then the PIN address code is latched into an appropriate register. If a correct identification message is not found in the first subband on that IOC then a middle subband and IOC is selected, such as the 11th subband, and the ISU again listens for the correct identification message. If the message again is not correctly detected, then the ISU restarts on another 6 MHz band. The ISU listens for the correct identification message in a subband for a period of time equal to at least two times the CXMU transmission time, for example 100 msec when transmission time is 50 msec as described above. The identification command is a unique command in the ISU **100**, as the ISU **100** will not require a PIN address code match to respond to such commands, but only a valid unique identifier and CRC match. If an un-initialized and un-activated ISU **100** receives an identification command from the CXMC **80** via the MCC modem **82** on an IOC channel, data which matches the unique identifier and a valid CRC, the CXSU **102** of the ISU **100** will store the PIN address code transmitted with the command and unique identifier. From this point on, the ISU **100** will only respond to commands which address it by its correct PIN address code, or a broadcast address code; unless, of course, the ISU is reactivated again and given a new PIN address code.

[**0353**] After the ISU **100** has received a match to its unique identifier, the ISU will receive the upstream frequency band command with a valid PIN address code that tells the ISU **100** which 6 MHz band to use for upstream transmission and the carrier or tone designations for the upstream channel to be used by the ISU **100**. The CXSU controller **102** interprets the command and correctly activates the ISU modem **101** of the ISU **100** for the correct upstream frequency band to respond in. Once the ISU modem **101** has acquired the correct 6 MHz band, the CXSU controller **102** sends a message command to the ISU modem **101** to enable upstream transmission. Distributed loops utilizing the carrier, amplitude, and timing recovery block **222** of the MCC modem upstream receiver architecture of the HDT **12** is used to lock the various ISU parameters for upstream transmission, including amplitude, carrier frequency, symbol alignment, and path delay.

[**0354**] The HDT is then given information on the new ISU and provides downstream commands for the various parameters to the subscriber ISU unit The ISU begins transmission in the upstream and the HDT **12** locks to the upstream signal. The HDT **12** derives an error indicator with regard to the parameter being adjusted and commands the subscriber ISU to adjust such parameter. The adjustment of error is repeated in the process until the parameter for ISU transmission is locked to the HDT **12**.

[**0355**] More specifically, after the ISU **100** has acquired the 6 MHz band for operation, the CXSU **102** sends a message command to the ISU modem **101** and the ISU modem **101** transmits a synchronization pattern on a synchronization channel in the primary synchronization band of the spectral allocation as shown in FIGS. **13-18**. The upstream synchronization channels which are offset from the payload data channels as allocated in FIGS. **13-18** include both a primary and a redundant synchronization channel such that upstream synchronization can still be accomplished if one of the synchronization channels is corrupted. The HDT monitors one channel for every ISU.

[**0356**] The MCC modem **82** detects a valid signal and performs an amplitude level measurement on a received signal from the ISU. The synchronization pattern indicates to the CXMC **80** that the ISU **100** has received the activation and initialization and frequency band commands and is ready to proceed with upstream synchronization. The amplitude level is compared to a desired reference level. The CXMC **80** determines whether or not the transmit level of the ISU **100** should be adjusted and the amount of such adjustment. If level adjustment is required, the CXMC **80** transmits a message on the downstream IOC channel instructing the CXSU **102** of the ISU **100** to adjust the power level of the transmitter of the ISU modem **101**. The CXMC **80** continues to check the receive power level from the ISU **100** and provides adjustment commands to the ISU **100** until the level transmitted by the ISU **100** is acceptable. The amplitude is adjusted at the ISU as previously discussed. If amplitude equilibrium is not reached within a certain number of iterations of amplitude adjustment or if a signal presence is never detected utilizing the primary synchronization channel then the same process is used on the redun-

dant synchronization channel. If amplitude equilibrium is not reached within a certain number of iterations of amplitude adjustment or if a signal presence is never detected utilizing the primary or redundant synchronization channels then the ISU is reset.

[0357] Once transmission level adjustment of the ISU **100** is completed and has been stabilized, the CXMC **80** and MCC modem **82** perform carrier frequency locking. The MCC modem **82** detects the carrier frequency as transmitted by the ISU **100** and performs a correlation on the received transmission from the ISU to calculate a carrier frequency error correction necessary to orthogonally align the multi-carriers of all the upstream transmissions from the ISUs. The MCC modem **82** return a message to the CXMC **80** indicating the amount of carrier frequency error adjustment required to perform frequency alignment for the ISU. The CXMC **80** transmits a message on a downstream IOC channel via the MCC modem **82** instructing the CXSU **102** to adjust the transmit frequency of the ISU modem **101** and the process is repeated until the frequency has been established to within a certain tolerance for the OFDM channel spacing. Such adjustment would be made via at least the synthesizer block **195 (FIGS. 24 and 25)**. If frequency locking and adjustment is accomplished on the ISU as previously described, then this frequency adjustment method is not utilized.

[0358] To establish orthogonality, the CXMC **80** and MCC modem **82** perform symbol alignment. The MCC modem **82** detects the synchronization channel modulated at 8 kHz frame rate transmitted by the ISU modem **101** and performs a hardware correlation on the receive signal to calculate the delay correction necessary to symbol align the upstream ISU transmission from all the distinct ISUs **100**. The MCC modem **82** returns a message to the CXMC **80** indicating the amount of delay adjustment required to symbol align the ISU **100** such that all the symbols are received at the HDT **12** simultaneously. The CXMC **80** transmits a message in a downstream IOC channel by the MCC modem **82** instructing the CXSU controller **102** to adjust the delay of the ISU modem **101** transmission and the process repeats until ISU symbol alignment is achieved. Such symbol alignment would be adjusted via at least the clock delay **196 (FIGS. 24 and 25)**. Numerous iterations may be necessary to reach symbol alignment equilibrium and if it is not reached within a predetermined number of iterations, then the ISU may again be reset.

[0359] Simultaneously with symbol alignment, the CXMC **80** transmits a message to the MCC modem **82** to perform path delay adjustment. The CXMC **80** sends a message on a downstream IOC channel via the MCC modem **82** instructing the CXSU controller **102** to enable the ISU modem **101** to transmit a another signal on a synchronization channel which indicates the multiframe (2 kHz) alignment of the ISU **100**. The MCC modem **82** detects this multiframe alignment pattern and performs a hardware correlation on the pattern. From this correlation, the modem **82** calculates the additional symbol periods required to meet the round trip path delay of the communication system. The MCC modem **82** then returns a message to the CXMC **80** indicating the additional amount of delay which must be added to meet the overall path delay requirements and the CXMC then transmits a message on a downstream IOC channel via the MCC modem **82** instructing the CXSU controller **102** to relay a message to the ISU modem **101** containing the path delay adjustment value. Numerous iterations may be necessary to reach path delay equilibrium and if it is not reached within a predetermined number of iterations, then the ISU may again be reset. Such adjustment is made in the ISU transmitter as can be seen in the display delay buffer "n" samples **192** of the upstream transmitter architectures of **FIGS. 24 and 25**. Path delay and symbol alignment may be performed at the same time, separately or together using the same or different signals sent on the synchronization channel.

[0360] Until the ISU is initialized and activated, the ISU **100** has no capability of transmitting telephony data information on any of the 480 tones or carriers. After such initialization and activation has been completed, the ISUs are within tolerance required for transmission within the OFDM waveform and the ISU is informed that transmission is possible and upstream synchronization is complete.

[0361] After an ISU **100** is initialized and activated for the system, follow-up synchronization or tracking may be performed periodically to keep the ISUs calibrated within the required tolerance of the OFDM transport requirements. The follow-up process is implemented to account for drift of component values with temperature. If an ISU **100** is inactive for extreme periods of time, the ISU can be tuned to the synchronization channels and requested to update upstream synchronization parameters in accordance with the upstream synchronization process described above. Alternatively, if an ISU his been used recently, the follow-up synchronization or tracking can proceed over an IOC channel. Under this scenario, as generally shown in **FIG. 28**, the ISU **100** is requested to provide a signal over an IOC channel by the HDT **12**. The HDT **12** then acquires and verifies that the signal is within the tolerance required for a channel within the OFDM waveform. If not, then the ISU is requested to adjust such errored parameters. In addition, during long periods of use, ISUs can also be requested by the HDT **12** to send a signal on an IOC channel or a synchronization channel for the purpose of updating the upstream synchronization parameters.

[0362] In the downstream direction, the IOC channels transport control information to the ISUs **100**. The modulation format is preferably differentially encoded BPSK, although the differential aspect of the downstream modulation is not required. In the upstream direction, the IOC channels transport control information to the HDT **12**. The IOC channels are differentially BPSK modulated to mitigate the transient time associated with the equalizer when sending data in the upstream direction. Control data is slotted on a byte boundary (500 μs frame). Data from any ISU can be transmitted on an IOC channel asynchronously; therefore, there is the potential for collisions to occur.

[0363] As there is potential for collisions, detection of collisions on the upstream IOC channels is accomplished at a data protocol level. The protocol for handling such collisions may, for example, include exponential backoff by the ISUs. As such, when the HDT **12** detects an error in transmission, a retransmission command is broadcast to all the ISUs such that the ISUs retransmit the upstream signal on the IOC channel after waiting a particular time; the wait time period being based on an exponential function.

[0364] One skilled in the art will recognize that upstream synchronization can be implemented allowing for multi-

point to point transmission using only the symbol timing loop for adjustment of symbol timing by the ISUs as commanded by the HDT. The frequency loop for upstream synchronization can be eliminated with use of high quality local free running oscillators in the ISUs that are not locked to the HDT. In addition, the local oscillators at the ISUs could be locked to an outside reference. The amplitude loop is not essential to achieve symbol alignment at the HDT.

[0365] In the process described above with respect to initialization and activation, including upstream synchronization, if for some reason communication is lost between a large number of ISUs **100** and the HDT **12**, after a period of time these ISUs **100** will require initialization and activation once again. Such a case may arise when a fiber is cut and users of multiple ISUs **100** arm left without service. As initialization and activation is described above, only one ISU **100** would be initialized and activated at one time. The time frame for initialization and activation of multiple ISUs **100** in this manner is shown in **FIG. 19**.

[0366] In **FIG. 19**, each ISU **100** is initialized, as previously described, by identification of the ISU and acquisition by the ISU of the 6 MHz band for downstream transmission during a scanning period T_{SCAN}, which is the time period needed for the ISU to scan all of the downstream bands listening for a matching identification message. In one embodiment, T_{SCAN} is equal to 6.16 seconds. Of course this time period is going to be dependant on the number of bands scanned, the time period necessary for synchronizing on the downstream synchronization channels, and the time required to acquire an IOC channel within the band.

[0367] Further as shown in **FIG. 19**, after each ISU has acquired a downstream and upstream 6 MHz band, upstream synchronization is then performed during a time period T_{EQUAL}. T_{EQUAL} may be defined as the period in which an ISU should have received all messages from the CXMC **80** finishing the upstream synchronization process as described above, with a reasonable amount of iterations to accomplish such synchronization. At the very least this time period is the time period necessary to accomplish symbol timing such that symbols received from various ISUs **100** at the HDT **12** are orthogonal. This time period would be increased if amplitude, frequency and path delay synchronization is also performed as described above. Therefore, the time period necessary to serially initialize and activate twelve ISUs, T_{SERIAL}, as shown in **FIG. 19** would be equal to $12T_{SCAN}+12T_{EQUAL}$.

[0368] With a burst identification process as shall be described with respect to **FIG. 20**, the time period for initializing and activating twelve ISUs **100** can be substantially reduced. This results in more ISUs **100** being activated more quickly and more users once again serviced in a shorter period of time. In the process of burst identification as shown by the timing diagram of **FIG. 20**, the identification and acquisition of multiple ISUs **100** is performed in parallel instead of being performed serially as described above.

[0369] The periodicity of the identification messages sent by the CXMC **80** during initialization and acquisition, when performed during normal operating conditions when ISUs **100** are serially initialized, is designed to present a light load of traffic on the IOC channel but yet to allow a reasonable identification duration. This periodicity duration is, for example, 50 milliseconds. For the system to be able to handle both situations, serial identification and burst identification, this periodicity is kept the same. However, in burst identification, the IOC channel traffic load is not important because service of all the ISUs **100** receiving communication via one of the CXMCs **80** utilizing the IOC channels has been terminated such as by the cut fiber. Therefore, during burst identification the IOC channels can be loaded more heavily and identification messages for multiple ISUs **100** utilizing such IOC channels are transmitted on the IOC channels at the same periodicity as during serial identification, but the phase for the identification messages is different for each ISU.

[0370] Due to the period, and utilization of the IOC channels for the identification messages during burst identification, there is a limit on the number of identification messages which may be transmitted during one T_{SCAN} period. If the periodicity is 50 milliseconds and the use of the IOC channel for a single identification message is 4 milliseconds, only twelve ISUs **100** may be identified during one T_{SCAN} period during burst identification. As described below with further reference to **FIG. 20**, if the number of ISUs **100** desired to be burst identified is greater than twelve, then multiple groups of burst identifications are serially performed.

[0371] One skilled in the art will recognize that the specified numbers for time periods are for illustration only and that the present invention is not limited to such specified time periods. For example, the periodicity may be 100 milliseconds and the number of ISUs identified during burst identification may be 24. Many different time periods may be specified with corresponding changes made to the other times periods specified. Further, burst identification may be accomplished having a periodicity different than that for serial identification.

[0372] As shown by the timing diagram of **FIG. 19, a** single burst initialization and activation of twelve inactive ISUs **100** can be accomplished in the time period T_{BURST} which is equal to $T_{SCAN}+12T_{EQUAL}$. This is an $11T_{SCAN}$ difference from the process carried out serially. During the T_{SCAN} period, identification messages for all twelve ISUs **100** being initialized are transmitted on the IOC channels for a CXMC **80**. The twelve identification messages are each sent once during each 50 millisecond period. The phase of each message is however different. For example, identification message for ISU**0** may be sent at time 0 and then again at 50 milliseconds, whereas the identification message for ISU**1** may be sent at time 4 milliseconds and then again at 54 milliseconds and so forth.

[0373] After the ISUs **100** being initialized have been identified and acquisition of the downstream 6 MHz band has occurred during T_{SCAN}, then upstream synchronization is performed in a serial manner with respect to each ISU identified during T_{SCAN}. The upstream synchronization for the ISUs is performed during the time period equal to $12T_{EQUAL}$. The CXMC **80** would start the upstream synchronization process in the same manner as described above for each ISU identified in a serial manner. The CXMC **80** sends to the ISU the upstream transmission band in which the ISU being synchronized is to transmit within and enables the upstream synchronization process to begin. The upstream, synchronization process for an ISU has been described in detail above. If an upstream transmission band

is not received and upstream synchronization is not enabled for an ISU during the $12T_{EQUAL}$ time period, then the ISU is reset at the end of the $12T_{EQUAL}$ period by a period of time equal to $T_{SCAN}+12T_{EQUAL}$ to possibly perform upstream synchronization in the next $12T_{EQUAL}$ period. Once a burst identification period, T_{BURST}, is completed, the process may be started over again in a second T_{BURST} period as shown in **FIG. 20** if additional ISUs **100** are to be initialized and activated.

[**0374**] **FIGS. 47 and 48** describe a control loop distributed through the system for acquiring and tracking an ISU, according to another embodiment of the invention. Loop **3900** shows steps executed by the ISU **66** or **68** at the left, and those executed by HDT **12** at the right. Messages between these two units are shown as horizontal dashed lines; the IOC channels carry these messages.

[**0375**] Steps **3910** prepare the ISU to communicate with the HDT. Step **3911** reads a prestored internal table **3912** indicating frequencies of the valid RF downstream bands, along with other information. Next step **3913** tunes the ISU's narrow-band receive modem to the center of the first 6 MHz band in table **3912**. Step **3913***a* then fine-tunes it to one of the two sync channels in that band; assume that this "primary" channel is the one at the lower end of the downstream part of the band shown in **FIG. 13**. Step **3914** acquires the amplitude and frequency of this sync tone. Briefly, equalizer **172**, **FIG. 22** or **23**, is adjusted to bring the out put of the FFT to about 12 dB below its upper limit. Recovery block **166** measures the time for ten frames of the sync tone, and compares it to the 1.25 msec correct time interval; the frequency of synthesizer **157** is then adjusted accordingly. Rough timing is satisfactory at this point, because the control messages used below are simple low-frequency binary-keyed signals. If sync cannot be acquired, exit **3915** causes block **3913***a* to retune to a secondary sync tone of the same 6 MHz band, the upper downstream tone of **FIG. 13**. If the ISU also fails to synchronize to the secondary tone, exit **3916** causes block **3913** to tune to the center of the next 6 MHz band in table **3912** and attempt synchronization again. If all bands have been tried, block **3913** continues to cycle through the bands again.

[**0376**] When step **3914** has acquired a lock, steps **3920** listen for messages from the HDT. Step **3921** reads an internal predetermined manufacturer's serial number which uniquely identifies that ISU, and compresses it into a shorter, more convenient format. Step **3922** fine-tunes the ISU modem to a designed primary subband, such as subband **0** in **FIG. 16**.

[**0377**] Concurrently, steps **3930** begin a search for the new ISU. Step **3931** receives an operator "ranging" command to connect an ISU having a particular serial number. Step **3932** then continuously broadcasts a "PIN message"**3933** on all IOC channels; this message contains the compressed form of the ISU serial number and a shorter personal identification number (PIN) by which that ISU will be known. Step **3923** in the ISU continuously receives all PIN messages, and attempts to match the transmitted compressed serial number with the number from table **3922***a*. If it fails to do so after a period of time, exit **3924** caused step **3922** to retune to another designated subband, such as subband **23** in **FIG. 13**, and try again. If no appropriate PIN message is received on the secondary subband, exit **3925** returns to step **3913** to switch to another 6 MHz band. When step **3923** receives the correct PIN message, step **3926** latches the PIN into the ISU to serve henceforth as its address within the system. In some implementations, the full serial number or other unique identifier of the physical ISU could serve directly as an address. However, this number occupies many bytes; it would be wasteful to transmit it every time a message is addressed to the ISU, or even to use it for ranging. Its compressed form, two bytes long, serves as a hash code which is practical to transmit in the continuous messages **3933**. The PIN is only one byte long, since addresses need be unique only within each 6 MHz band and are practical to use for identifying the ISU whatever the HDT needs to communicate with it. Message **3927** informs the HDT that the ISU will respond to its PIN.

[**0378**] Steps **3940** set up the upstream communications from the ISU to the HDT. After **3941** receives PIN confirmation **3927**, step **3942** sends a designation of the upstream frequency band to the ISU as an IOC message **3943**. This frequency may have been specified by the operator in step **3931**, or may have been generated by the HDT itself. Step **3944** times the ISU modem to this 6 Mhz band, and returns a confirmation **3945**. Step **3946** then fine-tunes to the primary upstream sync channel of that band, such as the lower one in **FIG. 13**. Step **3947** enables an HDT receiver on the design band.

[**0379**] Steps **3950** adjust the transmitted power of the ISU in the upstream direction; in a multipoint-to-point-system, the power levels of all ISUs must track each other in order to ensure orthogonality of the entire signal received by the modem of **FIG. 26**. Step **3951** transmits a ranging tone at an initial power level from the ISU on this sync channel which is sometimes called a ranging channel. At the HDT, step **3952** measures the received power level, and block **3953** sends an IOC message **3954**, causing step **3955** at the ISU to adjust the power of its transmitter **200**, **FIG. 24**, if necessary. If this cannot be done, message **3956** causes step **3946** to retune to a secondary ranging channel, such as the higher upstream sync tone of **FIG. 13**, and causes the step **3947** to enable the secondary channel at the HDT. If this loop also fails, exit **3957** reports a hard failure to the system logic.

[**0380**] Blocks **3960** align the symbol or frame timing between the ISU and the HDT. Step **3961** measures the phase of the ISU's ranging tone with respect to the sync tone that the HDT is sending to all ISUs at all times. **FIG. 11** shows this signal, labeled "8 kHz frame clk" in **FIG. 24**. Step **3962** sends messages **3963** as necessary to cause the ISU modem to adjust the timing of its ranging tone, in step **3964**. When this has completed, block **3965** detects whether or not groups of four frames are aligned correctly as between HDT and ISU; this grouping delineates boundaries of IOC messages, which are four frames long. The sync tones continually repeat a differential BPSK pattern of 1010 0101 0101 0101 over a period of 16 frames; that is, each bit occupies 125 microseconds, the duration of one frame. Thus, the space between the fourth and fifth bit, and between the sixteenth and first, can mark the multiframe boundaries. If alignment is income step **3966** sends message **3967**, causing the ISU to bump the phase of its "2 kHz superframe clk", **FIG. 24**. If step **3961** or step **3965** cannot reach the correct phase after a certain number of steps, fail exits **3969** report a hard failure.

[0381] Steps **3980** complete the induction of the new ISU into the system Step **3981** turns off the ranging tone at the ISU, tells the HDT at **3982** that it is locked in, and returns to the subband at which it was operating in step **3944**. Step **3983** requests preliminary configuration or capability data from the ISU, in message **3984**, whereupon step **3985** reads an internal table **3986** containing parameters indicating capabilities such as whether the ISU can tune only odd or even channel numbers, and other physical limitations of that particular modem. When message **3987** has communicated these parameters, step **3988** selects a particular subband of 10 or 130 payload channels (for an HISU or an MISU respectively). Message **3989** causes step **3990** to tune the ISU to the proper subband. Meanwhile, the HDT is acquiring an IOC data-link (IDL) channel, as described hereinbelow, at step **3991**. Step **3992** then sends message **3993** to the ISU, which reads the rest of the modem configuration and specifications from table **3986** at step **3994**, and transmits them over the IDL channel at **3995**. The HDT stores pertinent information concerning that ISU for future reference. The purpose of sending ISU data to the HDT is to accommodate various ISU models having greatly differing capabilities, and to allow continued use of legacy ISU equipment when the HDT has been upgraded to include additional capabilities.

[0382] During and after the process of **FIGS. 47 and 48**, the ISU receiving modem, **FIG. 22** or **23**, must track the acquired frequency and symbol timing of the HDT transmitting modem of **FIG. 21**. The practicalities of a multicarrier (MC) system impose requirements which are not obvious from experience with TDMA (time division multiple-access) and other conventional forms of bidirectional multipoint networks and systems , not in point-to-multipoint ("broadcast") multicarrier networks. In TDMA and similar systems, slight errors in frequency and timing, and larger errors in amplitude, can be compensated by tracking the received signal. In a broadcast MC system, all carriers are synchronized at the head end, and can again be tracked at the receiver. In a bidirectional multipoint-to-point multicarrier system, however, the HDT receiver must see all channels as though they had been generated by a single source, because the HDT decodes all channels in an entire 6 MHz band as a single entity, with a single FFT. Even slight errors among the individual ISUs in their 10-channel and 130-channel subbands causes severe distortion and intersymbol interference when the HDT FFT inverts the channels back into symbol strings for multiple DS**0** channels. The errors to be controlled are frequency, symbol timing, and signal amplitude. Amplitude (power level) in particular has been found to be much more stringent than in previous systems.

[0383] At all times after the ISU receiving modem **FIG. 22** or **23** has acquired the signal of HDT transmitting modem **FIG. 21**, it must track gradual changes in frequency, phase, and symbol timing caused by drift and other changes in the plant. **FIG. 49** shows a method **4000** for tracking these changes. Steps **4010**, executed by unit **153**, **FIG. 22** or **155**, **FIG. 23**, track the downstream power level to come for slow gain changes in the plant Step **4011** measures an average signal level by known methods from the output of FFT **170** or **180**. If it is correct exit **4012** takes no action. If the error is wrong but within a predetermined threshold of the correct value, block **4013** adjusts a coefficient of equalizer **172** to return the signal level to its nominal value. If the signal level changes more than a certain amount, or if it changes rapidly enough, the signal has probably been lost entirely. In that case, exit **4014** exits tracking mode; it may reenter the ranging procedure of **FIGS. 47 and 48**, or it may merely signal an error to the HDT.

[0384] Steps **4020** track carrier frequency in unit **166**, **FIG. 22** or **23**. An HISU modem of **FIG. 23** receives a subband having ten payload channels and one IOC at the center, as shown in **FIG. 16**. When this narrowband modem is tuned to the subband, the sync tones are no longer within its frequency range. Therefore, step **4021** measures the phase of the IOC channel within the currently tuned subband, rather than the sync tone used in **FIGS. 47 and 48**. Step **4022** smooths any phase error between the received carrier and the locally generated signal from generator **168**, **FIG. 22**, to prevent jitter. The frame clocks of both the receiving modem **FIG. 23** and the upstream transmitter **FIG. 24** use this clock; that is, the clocks are locked together within the HISU modem. Step **4023** updates the frequency of a local oscillator in RF synthesizer **157**. It should be noted here that the location of the IOC in the middle of the subband eliminates any offset phase error which otherwise must be compensated for. Steps **4020** may be the same for an MISU modem, **FIG. 22**; this modem has a 130-channel bandwidth, as shown in **FIG. 16**. The wider bandwidth of this modem includes multiple IOC tones for tracking. The modem may use one of them—preferably near the middle—or pairs of tones offset from the center of the subband.

[0385] Step **4030** tracks symbol timing. Step **4031** samples the frequency error between the received symbols and the local 8 kHz symbol sampling clock. If the sampling frequencies differ by more than about 2 ppm between the HDT and the ISU, the synthesized tones progressively depart from their bins at the receiving FFT until the equine can no longer track them. Step **4032** receives the sign of the sampling error from step **4031**, and applies a small 0.5 ppm correction to the frame frequency.

[0386] Process **4000** takes places in real time, in parallel with other processes.

[0387] After the upstream transmitting modem **101** portion shown in **FIG. 24** has tuned to a subband in **FIGS. 47 and 48**, it and the upstream receiving modem **82** portion of **FIG. 26** must continue to track in amplitude, frequency, and timing. The use of multicarrier (MC) technology imposes some requirements which are not obvious from experience with TDMA (time-division multiple access) or other bidirectional multipoint technologies, nor from point-to-multipoint (broadcast) MC networks and systems. In TDMA and similar systems, slight errors in frequency and timing, and larger errors in signal amplitude, can be compensated by tracking the signal at the receiver. In broadcast MC systems, all carriers are inherently synchronized at the head end, and can be tracked adequately at each receiver separately. In a bidirectional multipoint-to-point multicarrier plant, however, the head-end receiver sees all channels as though they had been generated by a single source, because the HDT decodes all channels in an entire 6 MHz band as a single orthogonal waveform with a single FFT converter. Even slight errors among the various ISUs in their 10-channel and 130-channel subbands can cause severe distortion and intersymbol interference when the FT in modem **82** portion of **FIG. 26** converts the channels back into bit strings for multiple DS**0** channels. The parameters to be controlled are

frequency, symbol timing, and signal amplitude or power level. Frequency and timing can be tricked in a manner similar to steps **4020** and **4030** of **FIGS. 47 and 48**. Amplitude, however, his been found to be more critical than in previous systems.

[**0388**] **FIG. 50** depicts a method **4100** for tracking changes in the upstream channel signal amplitude. After **FIGS. 47 and 48** have brought the ISU transmitting modem of **FIG. 24** on line, its amplitude must be balanced with that of all other ISUs in the system. Again, if different upstream subbands were received by different hardware, or in a TDMA fashion, where amplitude tracking could be particularized in frequency and/or time, a conventional AGC circuit could track amplitude variations adequately. In the embodiment described, power variations greater than about 0.25 dB from one subband to another cause a significant amount of distortion and intersymbol interference. In a physical system of, say, a 20 km radius, variations in the upstream signal level at the head end may vary by 20 dB or more for different ISU locations, and may additionally vary significantly over time because of temperature differences, channel loading, component aging, and many other factors. Conventional methods cannot achieve both the wide dynamic range and the high resolution required for an MC bidirectional muiti-point-to-point system.

[**0389**] The steps in the left column of **FIG. 50** are performed within each ISU, the HDT performs the steps on the right. Step **4110** selects a number of payload channels for monitoring from table **4111**. The channels must include one channel from each separate ISU, but need not include more than one. An MISU thus needs time in only one of its 130 payload channels a very low overhead. A 10-channel HISU subband, however, may require time in more than one of its 10 payload channels, because multiple HISUs can share the same subband. Of course, a powered-down ISU or one having no upstream payload channels provisioned to it, need not participate in blocks **1740**, because it does not transmit upstream at all. (It is alternatively possible to employ IOC channels instead of payload channels for this purpose. Although requiring less overhead, such use is generally much more complex to implement.)

[**0390**] After ranging procedure **3900** has acquired a correct initial power level, step **4120** performs a scan every 30 msec. for all the selected payload channels, as indicated by arrow **4121**. Each ISU responds at **4130** by sending a message **4131** on its selected upstream channel when the scan reaches that channel. In step, the HDT measures the received power level from each ISU separately. If the signal amplitude is within a certain range of its previous value, then steps **4150** compensate for the variation at the HDT. Step **4151** smooths the errors over several scans, to prevent sudden jumps from a single glitch. Step **4152** then adjusts the coefficients of equalizer **214** in the upstream receiving portion, **FIG. 26**, of modem **82**, **FIG. 3**, to compensate for the variation. This sequence compensates for small, slow variations at a high resolution; the equalizer steps are small and very linear.

[**0391**] Step **4140** may detect that the HDT equalizer is far from nominal near the end of its range—say, 4 dB up or down from nominal, for an equalizer having a ±5 dB range of 0.25 dB steps. This condition might occur for a large number of accumulated small errors, or it could be caused by a sudden, major change in the system, such as a break in an optical fiber followed by an automatic switch to another fiber having a different length. Steps **4160** compensate for this condition at the transmitting (ISU) end, rather than at the receiving (HDT) end. The HDT then stops the channel scan at step **4161**, and step **4162** sends an amplitude-error message **4163** over an IOC channel, addressed to the offending ISU. The message specifies the amount and direction of the compensation to be applied. The ISU applies this correction at step **4170** to vary the power output of its transmitter **200**, **FIG. 24**. Conventional transmitter power controls, such as a PIN attenuator diode **201** in power amplifier **200**, are typically relatively coarse and nonlinear, but they do possess a wide range of adjustment. DAC **203** receives IOC messages to control attenuator **201**. To allow the head-end equalizer to track the changing power more easily, step **4162** applies the correction over a long period of time, for example, 4-5 sec/dB; but, if the monitored channel is the only channel connected to that ISU, the entire correction can be made in a single large step. Instead of controlling adjustment speed at the ISU, the head end may send individual timed IOC messages for multiple partial corrections; the downstream is increased message traffic on the IOC channels.

[**0392**] ISUs may come online and be powered down at odd times. To prevent a feckless attempt a correction when an ISU is powered down or its signal has been lost for some other reason, step **4140** further detects a condition of substantially zero power received from the ISU. In that event, step **4180** sets the head-end equalizer to its default value and keeps it there.

[**0393**] Thus, power-leveling blocks **1740** take advantage of the characteristics of the system to adjust both ends in a way which achieves both high resolution and wide dynamic range. The digital control available in the headend equalizer provides precision and linearity in tracking slow changes, and the analog control at the ISU provides a wide range, and still allows the head end to track out inaccuracies caused by its coarse and nonlinear nature.

[**0394**] Call processing in the communication system **10** entails the manner in which a subscriber is allocated channels of the system for telephony transport from the HDT **12** to the ISUs **100**. The present communication system in accordance with the present invention is capable of supporting both call processing techniques not involving concentration, for example, TR-8 services, and those involving concentration, such as TR-303 services. Concentration occurs when there are more ISU terminations requiring service than there are channels to service such ISUs. For example, there may be 1,000 customer line terminations for the system, with only 240 payload channels which can be allocated to provide service to such customers.

[**0395**] Where no concentration is required, such as for TR-8 operation channels within the 6 MHz spectrum are statically allocated. Therefore, only reallocation of channels shall be discussed further below with regard to channel monitoring.

[**0396**] On the other hand, for dynamically allocated channels to provide concentration, such as for providing TR-303 services, the HDT **12** supports on-demand allocation of channels for transport of telephony data over the HFC distribution network **11**. Such dynamic allocation of channels is accomplished utilizing the IOC channels for com-

munication between the HDT **12** and the ISUs **100**. Channels are dynamically allocated for calls being received by a customer at an ISU **100**, or for calls originated by a customer at an ISU **100**. The CXMU **56** of HDT **12**, as previously discussed implements IOC channels which carry the call processing information between the HDT **12** and the ISUs **100**. In particular, the following call processing messages exist on the IOC channels. They include at least a line seizure or off-hook message from the ISU to the HDT; line idle or on-hook message from the ISU to the HDT; enable and disable line idle detection messages between the HDT and the ISUs.

[**0397**] Call processing is the communication system **10** entails the manner in which a subscriber is allocated channels of the system for telephony transport from the HDT **12** to the ISUs **100**. The present communication system in accordance with the present invention is capable of supporting both call processing techniques not involving concentration, for example, TR-8 services, and those involving concentration, such as TR-303 services. Concentration occurs when there are more ISU terminations requiring service than there are channels to service such ISUs. For example, there may be 1,000 customer line terminations for the system, with only 240 payload channels which can be allocated to provide service to such customers.

[**0398**] Where no concentration is required such as for TR-8 operation, channels within the 6 MHz spectrum are statically allocated. Therefore, only reallocation of channels shall be discussed further below with regard to channel monitoring.

[**0399**] On the other hand, for dynamically allocated channels to provide concentration, such as for providing TR-303 services, the HDT **12** supports on-demand allocation of channels for transport of telephony data over the HFC distribution network **11**. Such dynamic allocation of channels is accomplished utilizing the IOC channels for communication between the HDT **12** and the ISUs **100**. Channels are dynamically allocated for calls being received by a customer at an ISU **100**, or for calls originated by a customer at an ISU **100**. The CXMU **56** of HDT **12**, as previously discussed, implements IOC channels which carry the call processing information between the HDT **12** and the ISUs **100**. In particular, the following call processing messages exist on the IOC channels. They include at least a line seizure or off-hook message from the ISU to the HDT; line idle or on-hook message from the ISU to the HDT; enable and disable line idle detection messages between the HDT and the ISUs.

[**0400**] For a call to a subscriber on the HFC distribution network **11**, the CTSU **54** sends a message to the CXMU **56** associated with the subscriber line termination and instructs the CXMU **56** to allocate a channel for transport of the call over the HFC distribution network **11**. The CXMU **56** then inserts a command on the IOC channel to be received by the ISU **100** to which the call is intended; the command providing the proper information to the CXSU **102** to alert the ISU **100** as to the allocated channel.

[**0401**] When a call is originated by a subscriber at the ISU side, each ISU **100** is responsible for monitoring the channel units for line seizure. When line seizure is detected, the ISU **100** must communicate this change along with the PIN address code for the originating line to the CXMU **56** of the HDT **12** using the upstream IOC operation channel. Once the CXMU **56** correctly receives the line seizure message, the CXMU **56** forwards this indication to the CTSU **54** which, in turn, provides the necessary information to the switching network to set up the call. The CTSU **54** checks the availability of channels and allocates a channel for the call originated at the ISU **100**. Once a channel is identified for completing the call from the ISU **100**, the CXMU **56** allocates the channel over the downstream IOC channel to the ISU **100** requesting line seizure. When a subscriber returns on hook, an appropriate line idle message is sent upstream to the HDT **12** which provides such information to the CTSU **54** such that the channel can then be allocated again to support TR-303 services.

[**0402**] Idle channel detection can further be accomplished in the modem utilizing another technique. After a subscriber at the ISU **100** has terminated use of a data payload channel, the MCC modem **82** can make a determination that the previously allocated channel is idle. Idle detection may be performed by utilizing the equalization process by equalizer **214** (**FIG. 26**) which examines the results of the FFT which outputs a complex (I and Q component) symbol value. An error is calculated, as previously described herein with respect to equalization, which is used to update the equalizer coefficients. Typically, when the equalizer has acquired the signal and valid data is being detected, the error will be small. In the event that the signal is terminated, the error signal will increase, and this can be monitored by signal to noise monitor **305** to determine the termination of the payload data channel used or channel idle status. This information can then be utilized for allocating idle channels when such operation of the system supports concentration.

[**0403**] The equalization process can also be utilized to determine whether an unallocated or allocated channel is being corrupted by ingress as shall be explained in further detail below with respect to channel monitoring.

[**0404**] The telephony transport system may provide for channel protection from ingress in several manners. Narrowband ingress is a narrowband signal that is coupled into the transmission from an external source. The ingress signal which is located within the OFDM waveform can potentially take the entire band offline. An ingress signal is (most likely) not orthogonal to the OFDM carriers, and under worst case conditions can inject interference into every OFDM carrier signal at a sufficient level to corrupt almost every DS**0**+ to an extent that performance is degraded below a minimum bit error rate.

[**0405**] One method provides a digitally tunable notch filter which includes an interference sensing algorithm for identifying the ingress location on the frequency band. Once located the filtering is updated to provide an arbitrary filter response to notch the ingress from the OFDM waveform. The filter would not be part of the basic modem operation but requires the identification of channels that are degraded in order to "tune" them out. The amount of channels lost as a result of the filtering would be determined in response to the bit error rate characteristics in a frequency region to determine how many channels the ingress actually corrupted.

[**0406**] Another approach as previously discussed with respect to the ingress filter and FFT **112** of the MCC upstream receiver architecture of **FIG. 26** is the polyphase

filter structure. The cost and power associated with the filter are absorbed at the HDT **12**, while supplying sufficient ingress protection for the system. Thus, power consumption at the ISUs **100** is not increased. The preferred filter structure involves two staged polyphase filters as previously discussed with respect to **FIGS. 31 and 32** although use of one filter is clearly contemplated with loss of some channels. The filter/transform pair combines the filter and demodulation process into a single step. Some of the features provided by polyphase filtering include the ability to protect the receive band agent narrowband ingress and allow for scalable bandwidth usage in the upstream transmission. With these approaches, if ingress renders some channels unusable, the HDT **12** can command the ISUs to transmit upstream on a different carrier frequency to avoid such ingress.

[**0407**] The above approaches for ingress protection, including at least the use of digital tunable notch filters and polyphase filters, are equally applicable to point to point systems utilizing multicarrier transport. For example, a single MISU transporting to a single HDT may use such techniques. In addition, uni-directional multi-point to point transport may also utilize such techniques for ingress protection.

[**0408**] In addition, channel monitoring and allocation or reallocation based thereon may also be used to avoid ingress. External variables can adversely affect the quality of a given channel. These variables are numerous, and can range from electro-magnet interference to a physical break in an optical fiber. A physical break in an optical fiber severs the communication link and cannot be avoided by switching channels, however, a channel which is electrically interfered with can be avoided until the interference is gone. After the interface is gone the channel could be used again.

[**0409**] Referring to **FIG. 40, a** channel monitoring method is used to detect and avoid use of corrupted channels. A channel monitor **296** is used to receive events from board support software **298** and update a channel quality table **300** in a local database. The monitor **296** also sends messages to a fault isolator **302** and to channel allocator **304** for allocation or reallocation. The basic input to the channel monitor is parity errors which are available from hardware per the DS**0**+ channels; the DS**0**+ channels being 10-bit channels with one of the bits having a parity or data integrity bit inserted in the channel as previously discussed. The parity error information on a particular channel is used as raw data which is sampled and integrated over time to arrive at a quality status for that channel.

[**0410**] Parity errors are integrated using two time frames for each of the different service types including POTS, ISDN, DDS, and DS**1**, to determine channel status. The first integration routine is based on a short integration time of one second for all service types. The second routine, long integration, is service dependent, as bit error rate requirements for various services require differing integration times and monitoring periods as seen in Table 4. These two methods are described below.

[**0411**] Referring to **FIGS. 41, 42**, and **43**, the basic short integration operation is described. When a parity error of a channel is detest by the CXMU **56**, a parity interrupt is disabled by setting the interrupt priority level above that of the parity interrupt (**FIG. 41**). If a modem alarm is received which indicates a received signal failure, parity errors will be ignored until the failure condition ends. Thus, some failure conditions will supersede parity error monitoring. Such alarm conditions may include loss of signal, modem failure, and loss of synchronization. If a modem alarm is not active, a parity count table is updated and an error timer event as shown in **FIG. 42** is enabled.

[**0412**] When the error timer event is enabled, the channel monitor **296** enters a mode wherein parity error registers of the CXMU **56** are read every 10 milliseconds and error counts are summarized after a one second monitoring period. Generally, the error counts are used to update the channel quality database and determine which (if any) channels require reallocation. The channel quality table **300** of the database contains an ongoing record of each channel. The table organizes the history of the channels in categories such as: current ISU assigned to the channel, start of monitoring, end of monitoring, total error, errors in last day, in last week and in last 30 days, number of seconds since last error, severe errors in last day, in last week and in last 30 days, and current service type, such as ISDN, assigned to the channel.

[**0413**] As indicated in **FIG. 41**, after the parity interrupt is disabled and no active alarm exists, the parity counts are updated and the timer event is enabled. The timer event (**FIG. 42**), as indicated above, includes a one second loop where the errors are monitored. As shown in **FIG. 42**, if the one second loop has not elapsed, the error counts are continued to be updated. When the second has elapsed, the errors are summarized. If the summarized errors over the one second period exceed an allowed amount indicating that an allocated channel is corrupted or bad, as described below, channel allocator **304** is notified and ISU transmission is reallocated to a different channel. As shown in **FIG. 43**, when the reallocation has been completed, the interrupt priority is lowered below parity so that channel monitoring continues and the channel quality database is updated concerning the actions taken. The reallocation task may be accomplished as a separate task from the error timer task or performed in conjunction with that task. For example, the reallocator **304** may be part of channel monitor **296**.

[**0414**] As shown in **FIG. 44** in an alternate embodiment of the error timer task of **FIG. 42**, channels can be determined to be bad before the one second has elapsed. This allows the channels that are determined to be corrupted during the initial portion of a one second interval to be quickly identified and reallocated without waiting for the entire one second to elapse.

[**0415**] Instead of reallocation the power level for transmission by the ISU may be increased to overcome the ingress on the channel. However, if the power level on one channel is increased, the power level of at least one other channel must be decreased as the overall power level must be kept substantially constant. If all channels am determined bad, the fault isolator **302** is notified indicating the probability that a critical failure is present, such as a fiber break. If the summary errors over the one second period do not exceed an allowed amount indicating that the allocated channel is not corrupted, the interrupt priority is lowered below parity and the error timer event is disabled. Such event is then ended and the channels once again are monitored for parity errors per **FIG. 41**.

[**0416**] Two issues presented by periodic parity monitoring as described above must be addressed in order to estimate

the bit error rate corresponding to the observed count of parity errors in a monitoring period of one second to determine if a channel is corrupted. The first is the nature of parity itself. Accepted practice for data formats using block error demon assumes that an errored block represents one bit of error, even though the error actually represents a large number of data bits. Due to the nature of the data transport system, errors injected into modulated data are expected to randomize the data. This means that the average errored frame will consist of four (4) errored data bits (excluding the ninth bit). Since parity detects only odd bit errors, half of all errored frames are not detected by parity. Therefore, each parity (frame) error induced by transport interference represents an average of 8 (data) bits of error. Second, each monitoring parity error represents 80 frames of data (10 ms/125 μs). Since the parity error is latched, all errors will be detected but multiple errors will be detected as one error.

[0417] The bit error rate (BER) used as a basis for determining when to reallocate a channel has been chosen as 10^{-3}. Therefore, the acceptable number of parity errors in a one second interval that do not exceed 10^{-3} must be determined. To establish the acceptable parity errors, the probable number of frame errors represented by each observed (monitored) parity error must be predicted. Given the number of monitored parity errors, the probable number of frame errors per monitored parity error, and the number of bit errors represented by a frame (parity) error, a probable bit error rate can be derived.

[0418] A statistical technique is used and the following assumptions are made:

[0419] 1. Errors have a Poisson distribution, and

[0420] 2. If the number of monitored parity errors is small (<10) with respect to the total number of "samples" (**100**), the monitored parity error rate (PER) reflects the mean frame error rate (FER).

[0421] Since a monitored parity error (MPE) represents 80 frames, assumption **2** implies that the number of frame errors (FEs) "behind" each parity error is equal to 80 PER. That is, for 100 parity samples at 10 ms per sample, the mean number of frame errors per parity error is equal to 0.8 times the count of MPEs in one second. For example, if 3 MPEs are observed in a one second period, the mean number of FEs for each MPE is 2.4. Multiplying the desired bit error rate times the sample size and dividing by the bit errors per frame error yields the equivalent number of frame errors in the sample. The number of FEs is also equal to the product of the number of MPEs and the number of FEs per MPE. Given the desired BER, a solution set for the following equation can be determined.

$$\left(MPE\frac{FE}{MPE}\right) = 0.8MPE$$

[0422] The Poisson distribution, as follows, is used to compute the probability of a given number of FEs represented by a $MPE_{(X)}$, and assumption **2**, above, is used to arrive at the mean number of FEs per $MPE_{(P)}$,

$$P(x) = \frac{e^{-\mu}\mu^{x}}{x!}.$$

[0423] Since the desired bit error rate is a maximum, the Poisson equation is applied successively with values for $_{X}$ of 0 up to the maximum number. The sum of these probabilities is the probability that no more than $_{X}$ frame errors occurred for each monitored parity error.

[0424] The results for a bit error rate of 10^{-3} and bit errors per frame error of 1 and 8 are shown in Table 3.

TABLE 3

		Bit Error Rate Probability		
Bit Errors per Frame Error	Monitored Parity Errors	Maximum Frame Errors/Monitored Parity Error (x)	Average Frame Errors/Monitored Parity/Error (μ)	Probability of BER <-10^{-3}
8	2	4	1.6	98%
	3	3	2.4	78%
	4	2	3.2	38%
1	8	8	6.4	80%
	9	7	7.2	56%
	10	7	8.0	45%

[0425] Using this technique, a value of 4 monitored parity errors detected during a one second integration was determined as the threshold to reallocate service of an ISU to a new channel. This result is arrived at by assuming a worst case of 8 bit errors per frame error, but a probability of only 38% that the bit error rate is better than 10^{-3}. The product of the bit errors per frame, monitored parity errors and maximum frame errors per monitored parity error must be 64, for a bit error rate of 10^{-3} (64 errors in 64 k bits). Therefore, when the sampling of the parity errors in the error timer event is four or greater, the channel allocator is notified of a corrupted channel. If the sampled monitored party errors is less than 4, the interrupt priority is lowered below parity and the error timer event is disabled, ending the timer error event and the channels are then monitored as shown in **FIG. 41**.

[0426] The following is a description of the long integration operation performed by the background monitor routine (**FIG. 45**) of the channel monitor **296**. The background monitor routine is used to ensure quality integrity for

channels requiring greater quality than the short integration 10^{-3} bit error rate. As the flow diagram shows in **FIG. 45**, the background monitor routine operates over a specified time for each service type, updates the channel quality database table **300**, clears the background count, determines if the integrated errors exceed the allowable limits determined for each service type, and notifies the channel allocator **304** of bad channels as needed.

[**0427**] In operation, on one second intervals, the background monitor updates the channel quality database table. Updating the channel quality data table has two purposes. The first purpose is to adjust the bit error rate and number of errored seconds data of error free channels to reflect their increasing quality. The second purpose is to integrate intermittent errors on monitored channels which are experiencing error levels too low to result in short integration time reallocation (less than 4 parity errors/second). Channels in this category have their BER and numbers of errored seconds data adjusted, and based on the data, may be reallocated. This is known as long integration time re-allocation, and the default criteria for long integration time re-allocation for each service type are shown as follows:

TABLE 4

Service type:	Maximum BER:	Integration Time:	Errored seconds	Monitoring Period:
POTS	10^{-3}	1 second		
ISDN	10^{-6}	157 seconds	8%	1 hour
DDS	10^{-7}	157 seconds	0.5%	1 hour
DS1	10^{-9}	15,625 seconds	0.04%	7 hours

[**0428**] Because POTS service does not require higher quality than 10^{-3}, corrupted channels are sufficiently eliminated using the short integration technique and long integration is not required.

[**0429**] As one example of long integration for a service type, the background monitor shall be described with reference to a channel used for ISDN transport. Maximum bit error rate for the channel may be 10^{-4}, the number of seconds utilized for integration time is 157, the maximum number of errored seconds allowable is 8% of the 157 seconds, and the monitoring period is one hour. Therefore, if the summation of errored seconds is greater than 8% over the 157 seconds in any one hour monitoring period, the channel allocator **304** is notified of a bad channel for ISDN transport.

[**0430**] Unallocated or unused channels, but initialized and activated, whether used for reallocation for non-concentration services such as TR-8 or used for allocation or reallocation for concentration services such as TR-303, must also be monitored to insure that they are not band, thereby reducing the chance that a band channel will be allocated or reallocated to an ISU **100**. To monitor unallocated channels, channel monitor **296** uses a backup manager routine (**FIG. 46**) to set up unallocated channels in a loop in order to accumulate error data used to make allocation or re-allocation decisions. When an unallocated channel experiences errors, it will not be allocated to an ISU **100** for one hour. After the channel has remained idle, (unallocated) for one hour, the channel monitor places the channel in a loop back mode to see if the channel has improved. In loop back mode, the CXMU **56** commands an initialized and activated ISU **100** to transmit a message on the channel long enough to perform short or long integration on the parity errors as appropriate. In the loop back mode, it can be determined whether the previously corrupted channel has improved over time and the channel quality database is corrupted accordingly. When not in the loop back mode, such channels can be powered down.

[**0431**] As described above, the channel quality database includes information to allow a reallocation or allocation to be made in such a manner that the channel used for allocation or reallocation is not corrupted. In addition, the information of the channel quality database can be utilized to rank the unallocated channels as for quality such that they can be allocated effectively. For example, a channel may be good enough for POTS and not good enough for ISDN. Another additional channel may be good enough for both. The additional channel may be held for ISDN transmission and not used for POTS. In addition, a particular standby channel of very good quality may be set aside such that when ingress is considerably high, one channel is always available to be switched to.

[**0432**] In addition, an estimate of signal to noise ratio can also be determined for both unallocated and allocated channels utilizing the equalizer **214** of the MCC modem **82** upstream receiver architecture as shown in **FIG. 26**. As described earlier, the equalizer was previously utilized to determine whether a channel was idle such that it could be allocated. During operation of the equalizer, as previously described, an error is generated to update the equalizer coefficients. The magnitude of the error can be mapped into an estimate of signal to noise ratio (SNR) by signal to noise monitor **305** (**FIG. 26**). Likewise, an unused channel should have no signal in the band. Therefore, by looking at the variance of the detected signal within the unused FFT bin, an estimate of signal to noise ratio can be determined. As the signal to noise ratio estimate is directly related to a probable bit error rate, such probable bit error rate can be utilized for channel monitoring in order to determine whether a bad or good channel exists.

[**0433**] Therefore, for reallocation for nonconcentration services such as TR-8 services, reallocation can be performed to unallocated channels with such unallocated channels monitored through the loopback mode or by SNR estimation by utilization of the equalizer. Likewise, allocation or reallocation for concentration services such as TR-303 services can be made to unallocated channels based upon the quality of such unallocated channels as determined by the SNR estimation by use of the equalizer.

[**0434**] With respect to channel allocation, a channel allocator routine for channel allocator **304** examines the channel quality database table to determine which DS**0**+ channels to allocate to an ISU **100** for a requested service. The channel allocator also checks the status of the ISU and channel units to verify in-service status and proper type for the requested service. The channel allocator attempts to maintain an optimal distribution of the bandwidth at the ISUs to permit flexibility for channel reallocation. Since it is preferred that ISUs **100**, at least HISUs, be able to access only a portion of the RF band at any given time, the channel allocator must distribute channel usage over the ISUs so as to not overload any one section of bandwidth and avoid reallocating in-service channels to make room for additional channels.

[0435] The process used by the channel allocator **304** is to allocate equal numbers of each ISU type to each band of channels of the 6 MHz spectrum. If necessary, in use channels on an ISU can be moved to a new band, if the current ISU band is full and a new service is assigned to the ISU. Likewise, if a channel used by an ISU in one band gets corrupted, the ISU can be reallocated to a channel in another subband or band of channels. Remember that the distributed IOC channels continue to allow communication between the HDT **12** and the HISUs as an HISU always sees one of the IOC channels distributed throughout the spectrum. Generally, channels with the longest low-error rate history will be used first. In this way, channels which have been marked bad and subsequently reallocated for monitoring purposes will be used last, since their histories will be shorter than channels which have been operating in a low error condition for a longer period.

Second Embodiment of Telephony Transport System

[0436] A second embodiment of an OFDM telephony transport system, referring to FIGS. **36-39** shall be described. The 6 MHz spectrum allocation is shown in **FIG. 36**. The 6 MHz bandwidth is divided into nine channel bands corresponding to the nine individual modems **226** (**FIG. 37**). It will be recognized by one skilled in the art that less modems could be used by combining identical operations. Each of the channel bands includes 32 channels modulated with a quadrature 32-ary format (32-QAM) having five bits per symbol. A single channel is allocated to support transfer of operations and control data (IOC control data) for communication seen an HDT **12** and ISUs **100**. This channel uses BPSK modulation.

[0437] The transport architecture shall first be described with respect to downstream transmission and then with respect to upstream transmission. Referring to **FIG. 37**, the MCC modem **82** architecture of the HDT **12** will be described. In the downstream direction, serial telephony information and control data is applied from the CXMC **80** through the serial intern **236**. The serial data is demultiplexed by demultiplexer **238** into parallel data streams. These data streams are submitted to a bank of 32 channel modems **226** which perform symbol mapping and last Fourier transform (FFT) functions. The 32 channel modems output time domain samples which pass through a set of mixers **240** that are driven by the synthesizer **230**. The mixers **240** create a set of frequency bands that am orthogonal, and each band is then filtered through the filter/combiner **228**. The aggregate output of the filter/combiner **228** is then up-converted by synthesizer **242** and mixer **241** to the final transmitter frequency. The signal is then filtered by filter **232**, amplified by amplifier **234**, and filtered again by filter **232** to take off any noise content. The signal is then coupled onto the HFC distribution network via telephony transmitter **14**.

[0438] On Be downstream end of the HFC distribution network **11**, an ISU **100** includes a subscriber modem **258** as shown in **FIG. 38**. The down signals are received from the ODN **18** through the coax leg **30**, and are filtered by filter **260** which provides selectivity for the entire 6 MHz band. Then the signal is split into two parts. The first part provides control data and timing information to synchronize clocks for the system. The second part provides the telephony data. With the control data received separately from the telephony data, this is referred to as previously described above as an out of band ISU. The out of band control channel which is BPSK modulated is split off and mixed to baseband by mixer **262**. The signal is then filtered by filter **263** and passed through an automatic gain control stage **264** and a Costas loop **266** where carrier phase is recovered. The signal that results is passed into a timing loop **268** so timing can be recovered for the entire modem. The IOC control data, which is a byproduct of the Costas loop, is passed into the 32 channel OFDM modem **224** of the ISU **100**. The second part of the downstream OFDM waveform is mixed to base band by mixer **270** and associated synthesizer **272**. The output of the mixer **270** is filtered by filter **273** and goes through a gain control stage **274** to prepare it for reception. It then passes into the 32 channel OFDM modem **224**.

[0439] Referring to **FIG. 39**, the IOC control data is hard limited through function block **276** and provided to microprocessor **225**. The OFDM telephony data is passed through an analog to digital converter **278** and input to a first-in first-out buffer **280** where it is stored. When a sufficient amount of information is stored, it is accepted by the microprocessor **225** where the remainder of the demodulation process, including application of an FFT, takes place. The microprocessor **225** provides the received data to the rest of the system through the receive data and receive data clock interface. The fast Fourier transform (FFT) engine **282** is implemented off the microprocessor. However, one skilled in the art will recognize that the FFT **282** could be done by the microprocessor **225**.

[0440] In the upstream direction, data enters the 32 channel OFDM modem **224** through the transmit data ports and is converted to symbols by the microprocessor **225**. These symbols pass through the FFT engine **282**, and the resulting time domain waveform, including guard samples, goes through a complex mixer **284**. The complex mixer **284** mixes the waveform up in frequency and the signal is then passed through a random access memory digital to analog converter **286** (RAM DAC). The RAM DAC contains some RAM to store up samples before being applied to the analog portion of the ISU upstream transmitter (**FIG. 38**). Referring to **FIG. 38**, the OFDM output for upstream transport is filtered by filter **288**. The waveform then passes through mixer **290** where it is mixed under control of synthesizer **291** up to the transmit frequency. The signal is then passed through a processor gain control **292** so that amplitude leveling can take place in the upstream path. The upstream signal is finally passed through a 6 MHz filter **294** as a final selectivity before upstream transmission on the coaxial leg **30** to the ODN **18**.

[0441] In the upstream direction at the HDT **12** side, a signal received on the coax from the telephony receiver **16** is filtered by filter **244** and amplified by amplifier **246**. The received signal, which is orthogonally frequency division multiplexed, is mixed to baseband by bank of mixers **248** and associated synthesizer **250**. Each output of the mixers **248** is then filtered by baseband filter bank **252** and each output time domain waveform is sent then to a demodulator of the 32 channel OFDM modems **226**. The signals pass through a FFT and the symbols are mapped back into bits. The bits are then multiplexed together by multiplexer **254** and applied to CXMC **56** through the other serial interface **256**.

[0442] As shown in this embodiment, the ISU is an out of band ISU as utilization of separate receivers for control data and telephony data is indicative thereof as previously discussed. In addition, the separation of the spectrum into channel bands is further shown. Various other embodiments as contemplated by the accompanying claims of the transport system are possible by building on the embodiments described herein. In one embodiment, an IOC control channel for at least synchronization information transport, and the telephony service channels or paths are provided into a single format. The IOC link between the HDT **12** and the ISUs **100** may be implemented as four BPSK modulated carriers operating at 16 kbps, yielding a data rate of 64 kbps in total. Each subscriber would implement a simple separate transceiver, like in the second embodiment, which continuously monitors the service channel assigned to it on the downstream link separately from the telephony channels. This transceiver would require a tuned oscillator to tune to the service IOC channel. Likewise, an IOC channel could be provided for channel bands of the 6 MHz bandwidth and the channel bands may include orthogonal carriers for telephony data and an IOC channel that is received separately from the reception of the orthogonal carriers.

[0443] In another embodiment, instead of 4 BPSK channels a single 64 kbps IOC channel is provided. This single channel lines on the OFDM frequency structure, although the symbol rate is not compatible with the telephony symbol rate of OFDM framework. This single wide band signal requires a wider band receiver at the ISU **100** such that the IOC link between the HDT **12** and ISUs is always possible. With single channel support it is possible to use a fixed reference oscillator that does not have to tune across any part of the band in the subscriber units. However, unlike in the first embodiment where the IOC channels are distributed across the spectrum allowing for narrow band receivers, the power requirements for this embodiment would increase because of the use of the wide band receiver at the ISU **100**.

[0444] In yet another embodiment, the IOC link may include two IOC channels in each of 32 OFDM channel groups. This increases the number of OFDM carriers to 34 from 32 in each group. Each channel group would consist of 34 OFDM channels and a channel band may contain 8 to 10 channels groups. This approach allows a narrow band receiver to be used to lock to the reference parameters provided by the HDT **12** to utilize an OFDM waveform, but adds the complexity of also having to provide the control or service information in the OFDM data path format. Because the subscriber could tune to any one of the channel groups, the information that is embedded in the extra carriers must also be tracked by the central office. Since the system needs to support a timing acquisition requirement, this embodiment may also require that a synchronization signal be place off the end of the OFDM waveform.

[0445] It is to be understood, however, that even though numerous characteristics of the present invention have been set forth in the foregoing description, together with details of the she and function of the invention, the disclosure is illustrative and changes in matters of order, shape, size, and arrangement of the parts, and various properties of the operation may be made within the principles of the invention and to the full extent indicated by the broad general meaning of the terms in which the appended claims are expressed.

[0446] In the following detailed description of the preferred embodiments, reference is made to the accompanying drawings that form a part thereof, and in which are shown by way of illustration specific embodiments in which this invention may be practiced. It is understood that other embodiments may be used and structural changes may be made without departing from the scope of the claimed invention.

[0447] **FIG. 70** shows one embodiment of this invention having an apparatus, generally indicated as FFT system **2100**, which performs both forward and inverse FFT functions. The input/output signals to FFT system **2100** include some (or, in one preferred embodiment, all) of the following: real data-in **2111** (having an N-bit-wide data path; in one embodiment, this is 10 bits wide, and bi-directional so it can be both written to and read from), imaginary data-in **2112** (having an N-bit-wide data path in one embodiment, this is 10 bits wide, and bi-directional so it can be both written to and read from), address in **2113** (having enough bits to specify addresses for each input value or input-value pair), control and clock lines **2114** that control writing (and reading) data from the input side, test signals **2115**, size-select bits **2116**, bit-growth-select bits for each of P stages including bit-growth-I bits **2117** through bit-growth-P bits **2118**, forward/inverse select signal **2119** which specifies whether to perform a forward or inverse transform, power-down command signal input **2109**, real data-out **2121** (having an M-bit-wide data path, in one embodiment, this is 10 bits), imaginary data-out **2122** (having an M-bit-wide data path, in one embodiment, this is 10 bits). address out **2123** (having enough bits to specify addresses for each output value or output value pair) (in one embodiment, these are driven by an external device to select output values as they we needed), control and clock lines **2124** that control reading data from the output side, overflow signal **2125** which indicates that one or more output values has overflowed, and FFT complete signal **2126** which is activated when a transform has been completed.

[0448] ASIC **2101** Fabrication

[0449] In one embodiment, the FFT system **2100** is fabricated on an application-specific integrated circuit ("ASIC") **2101**, a chip fabricated by LSI Logic Inc. In this embodiment, full scan testing circuits are included into the ASIC **2101** for testability. In this embodiment, FFT system **2100** is fabricated in LSI Logic LCB500K technology, which is a 0.5 micron rule, 3.3 Volt CMOS (complementary metal-oxide semiconductor) process.

[0450] Functional Description Overview of FFT System **2100**

[0451] In one embodiment, ASIC **2101** has four pins, size select **2116**, to select between the various transform sizes (i.e., transforms having 2^N points; where $5 \leqq N \leqq 10$, thus providing selectability for a 1024-point transform, a 512-point transform, a 256-point transform, a 128-point transform, a 64-point transform, or a 32-point transform). In one application, transforms are completed in less than 125 microseconds. See the "Execution Time" section below for the minimum clock frequencies necessary to meet this requirement. In one embodiment, when performing a 1024-point transform, a clock of at least approximately 32 MHz is required. In one embodiment, when performing a 512-point transform, a clock of at least approximately 16.5 MHz

is required. In one embodiment, when performing a 32-point transform, a clock of at least approximately 4 MHz is required.

[0452] **FIG. 71** is a block diagram of modem **2400** according to the present invention which includes a FFT system **2100** configured to perform an IFFT in transmitter section **2401** (similar to the transmitter shown in **FIG. 21**) and another FFT system **2100** configured to perform an FFT in receiver section **2402** (similar to the receiver shown in **FIG. 26**).

[0453] In one embodiment, ASIC **2101** has three logical links of RAM which are configurable as shown in **FIG. 72**: an input RAM **2251** (containing a plurality of real input values **2241** and a plurality of imaginary input values **2245**), an output RAM **2253** (containing a plurality of real output values **2243** and a plurality of imaginary output values **2247**), and a conversion RAM **2252** (containing a plurality of real conversion values **2242** and **2244** and a plurality of imaginary conversion values **2246** and **2248**). In one embodiment, input RAM **2251** has 1024 complex-value positions, each 20 bits wide (10 bits wide for each real input value **2241** and 10 bits wide for each imaginary input value **2245**), output RAM **2253** has 1024 complex-value positions, each 20 bits wide (10 bits wide for each real output value **2243** and 10 bits for each imaginary output value **2247**) and conversion RAM **2252** has 1024 complex-value positions, each 30 bits wide (15 bits wide for each real conversion value **2242** and **2244** and 15 bits wide for each imaginary conversion value **2246** and **2248**). (The 5 extra low-order real bits **2244** and 5 extra low-order imaginary bits **2248** in each position of the conversion RAM **2252** help to avoid loss of precision during calculations.) The internal functions of ASIC **2101** have exclusive access to the conversion RAM **2252** and perform the FFT calculations out of this conversion RAM **2252**. The input RAM **2251** is accessible to the user's input device as an input to the FFT system **2100** (to be written under external control with input data). The output RAM **2253** is accessible to the users output device as an output source (to be read under external control to obtain output data). In one embodiment, the rising edge of an approximately 8-KHz frame clock **2108** is used to start the computation of each transform (e.g., either a 1024-point FFT, or a 1024-point IFFT).

[0454] In one embodiment, the functions of all three banks of RAMs are also "permuted" on the rising edge of this 8-KHz frame clock **2108**, before each FFT calculation starts. As used herein, this "permutation" changes the function of each bank of RAM without actually moving data: input RAM **2251** becomes conversion RAM **2252**, conversion RAM **2252** becomes output RAM **2253**, and output RAM **2253** becomes input RAM **2251**. Note that, in this embodiment, no RAM data is moved when the functions are permuted. **FIG. 73** shows one embodiment of a physical implementation which provides the function of input RAM **2251**, conversion RAM **2252**, and output RAM **2253**. Bank control block **2131** permutes the function of the physical RAM banks **2151**, **2152** and **2153** at the rising edge of frame clock **2139**. One of the functions of bank control state machine **2131** is to control the routing of data through RAM input multiplexers (MUXS) **2171**, **2172**, and **2173** and the routing of data through RAM output multiplexers (MUXs) **2181**, **2182**, and **2183**. For example, at a first given state, bank control **2131** controls input-select block **2132** to input data into physical RAM bank **2151** (in one embodiment, physical RAM bank **2151** includes 1024 ten-bit real values and 1024 ten-bit imaginary values). Thus, in the first state, physical RAM bank **2151** acts as logical input RAM bank **2251**. Once all of the desired first set of input values (up to 1024 values or pairs of values) have been inputted, the frame clock **2139** is driven to change the state of bank control **2131** (permuting the three RAM bank's respective functions) to a second state, in which bank control **2131** controls input-select block **2132** to input data into physical RAM bank **2152** and bank control **2131** controls conversion-select block **2133** to direct computation accesses for data into physical RAM bank **2151**. (The five low-order bits of values used for computation are always provided from physical RAM bank **2154**.) Thus, in the second state, physical RAM bank **2152** acts as logical input RAM bank **2251** and physical RAM bank **2151** acts as logical conversion RAM bank **2252**. Once all of the desired second set of input values (up to 1024 values or pairs of values) have been inputted, the frame clock **2139** is driven to change the state of bank control **2131** (permuting the three RAM bank's respective functions again) to a third state, in which bank control **2131** controls input-select block **2132** to input data into physical RAM bank **2153**, bank control **2131** controls conversion-select block **2133** to direct computation accesses for data into physical RAM bank **2152**, and bank control **2131** controls output-select block **2134** to direct output requests for accesses for data from physical RAM bank **2151**. Thus, in the third state, physical RAM bank **2153** acts as logical input RAM bank **2251**, physical RAM bank **2152** acts as logical conversion RAM bank **2252**, and physical RAM bank **2151** acts as logical output RAM bank **2253**. Once all of the desired third set of input values (up to 1024 values or pairs of values) have been inputted—and the first set of converted output values (up to 1024 values or pairs of values) have been outputted—then the frame clock **2139** is driven to change the state of bank control **2131** (permitting the three RAM bank's respective functions again) back to the first state, in which bank control **2131** controls input-select block **2132** to input data into physical RAM bank **2151**, bank control **2131** controls conversion-select block **2133** to direct computation accesses for data into physical RAM bank **2152**, and bank control **2131** controls output-select block **2134** to direct output requests for accesses for data from physical RAM bank **2153**. Thus, in the first state, physical RAM bank **215** again acts as logical input RAM bank **2251**, physical RAM bank **2153** acts as logical conversion RAM bank **2252**, and physical RAM bank **2152** acts as logical output RAM bank **2253**.

[0455] At the beginning of each transform (i.e, FFT/IFFT (fast Fourier transform or inverse fast Fourier transform)) process, the functions of the RAM bank memories (the mapping of RAMs **2151**, **2152**, and **2153** to RAMs **2251**, **2252**, and **2253**) are permuted. The conversion RAM **2252** becomes the output RAM **2253**, the input RAM **2251** becomes the conversion RAM **2252**, and the output RAM **2253** becomes the input RAM **2251**. Each RAM (**2251**, **2252**, and **2253**) has it own independent control and clock signals (**2114**, **2128**, and **2124**, respectively). While the current transform is being calculated in conversion RAM **2252**, the results of the previously calculated FFT/IFFT may be read from the output RAM **2253** and the data for the next FFT calculation may be asynchronously and simultaneously written to the input RAM **2251**. In one embodiment, access

to the input RAM **2251** and output RAM **2253** is restricted for 3 clock cycles (one prior to and two after) relative to the rising edge of the frame clock. This allows the RAM permutation to proceed safely without undesirable data loss.

[**0456**] Forward Fast Fourier Transform (FFT) and Inverse Fast Fourier Transform (IFFT)

[**0457**] In one embodiment FFT system **2100** is implemented on a single integrated circuit (IC) that performs both a forward FFT and an inverse FFT ("IFFT", also called a reverse FFT). A pin, forward/inverse signal **2119**, selects between the two types of transform. The inverse FFT uses the identical calculation sequence as the forward transform, but the complex values (i.e., real and imaginary) of the twiddle factors and butterfly coefficients are conjugated relative to these values used for the FFT. A forward FFT is defined to convert a time-domain signal into frequency-domain signals and, in one embodiment, is used in the transmitter **2401** of modem **2400** (see **FIG. 71**). An inverse FFT is defined to convert frequency-domain signals to time-domain signals and is used in the receiver **2402** of the modem **2400**.

[**0458**] In one embodiment, the underlying structure of FFT system **2100** supports five radix-4 butterflies (i.e., butterfly operations) usable to perform the 1024-point transforms (FFT and IFFT). The butterflies and stages are reduced for lower-order transforms. (In one embodiment, every other twiddle factor of the 1024-point twiddle-factor lookup table **2610** is used when calculating the 512-point transforms by forcing to zero the low-order address bit to the twiddle-factor lookup table **2610**. Every fourth twiddle factor of the 1024-point twiddle-factor lookup table **2610** is used when calculating the 256-point transforms by forcing to zero the two low-order address bits to the twiddle-factor lookup table **2610**.) In one embodiment, all FFT transforms are calculated by using radix-4 butterflies, except for the last stage of the 512-point, 128-point and 32-point transforms, which use the radix-4 structure to perform a radix-2 butterfly. (Obvious extensions are made if other transforms are used). Thus, the 1024-point transforms use five stages of radix-4 butterflies, the 512 point transforms use four stages of radix-4 butterflies followed by one stage of a radix-2 butterfly, etc.

[**0459**] Scaling of FFT output

[**0460**] In one embodiment, scaling is controlled by ten external pins (bit-growth signals **2117** though **2118**) on the AS1C **2101**. Two pins are used for each of the five passes required for the 1024- and 512-point transform. The use of two pins at each stage allows a scaling factor (e.g., a shift right of each result value) of from 0 bits to 3 bits which exceeds the nominal bit growth of 1 bit observed in the inventor's analysis. In one embodiment, the binary number represented by each pair of pins indicates the number of binary places that the results of each calculation are to be shifted right (divided) by before they are placed back into conversion RAM **2252**. Note that in one such embodiment scaling the result after each butterfly operation requires at least some working registers to maintain bits greater than the MSB of the 15-bit values (each for real and imaginary) in the internal conversion RAM **2252**, and the scaling to be applied prior to storage in the conversion RAM **2252**.

[**0461**] Round-off/truncation, saturation, and scaling

[**0462**] In one embodiment, each input and output number is represented by 10 bits (i.e., 10 bits for each real portion, plus 10 bits for each imaginary portion of a complex pair of numbers). Numbers are represented as two's-complement fractional arithmetic with the binary point immediately to the right of the sign bit. Fractional arithmetic helps prevent multiplies from causing overflow. The result portion of a double-precision multiply which is used is the upper fifteen bits.

[**0463**] Number growth is managed by the 10 scaling pins (bit growth signals **2117-2118**) mentioned previously. In addition, the ASIC **2101** uses saturation logic that prevents number roll over. That is to say, that if the result of an addition or subtraction exceeds the maximum value that can be represented in 15 bits, the result is replaced by a value representing the maximum possible integer. Likewise, if the result of an addition or subtraction is less than the minimum value that can be represented in 15 bits, the result is replaced by a value representing the minimum possible integer.

[**0464**] In one embodiment, ASIC **2101** has the following registers for real and complex data: 10-bit input RAM **2251** and 10-bit output RAM **2253**, and a 15 bit conversion RAM **2252**. The input values are presented as a two's complement fractional binary value (2.bbbbbbbbb). In the internal conversion RAM, the five extra bits are appended at the bottom (i.e., low-order position) of the input word. The resulting format is an extended 2's-complement value in the internal conversion RAM **2252** (e.g., s.bbbbbbbbbxxxxx, where s is sign, b's are significant input bits, and x's are extra bits to maintain precision). Note that in one embodiment any extension bits in the working registers extend the sign bit to achieve the desired 2's-complement results.

[**0465**] In one embodiment, at the output of each transform pass, the result is shifted down as specified by the signals provided into the scaling pins **2117-2118** for that pass. The output RAM **2253** aligns precisely with the upper 10 bits of the conversion RAM **2252**, in a manner similar to the input RAM **2251** (s.bbbbbbbbbxxxxx), each output value (after the final growth factor is applied prior to storage in the internal conversion RAM **2252** is rounded to produce the output results (s.bbbbbbbbr).

[**0466**] Power Down

[**0467**] In one embodiment, the ASIC has a single pin, power-down signal **2109**, to control power down that gates off the internal clock in the ASIC, and places the input RAM **2251** and output RAM **2253** into a low power state. In one embodiment, access attempts to those RAMS **2251** and **2253** while in the low power state will be unsuccessful.

[**0468**] Execution Time

[**0469**] The maximum FFT execution frequency requires that a 1024-point transform be completed in 125 microseconds based on a 32 MHz clock.

[**0470**] An approximately 8-KHz frame clock **2108** is provided to the ASIC **2101** to signify the beginning of a transform cycle. Prior to the rising edge of this clock, the previous FFT should be complete. Table 5 below summarizes the clock frequency to perform a 1024-point and a 512-point FFT in 125 microseconds.

TABLE 5

FFT Clock required to perform a transform in 125 microseconds

Transform Size	Clock cycles per conversion	Clock Frequency for 125 μSec conversion rate (MHz)
1024	3845	30.8
512	1925	15.4
256	775	6.2
128	390	3.1
64	150	1.2
32	80	0.64

[0471] FFT Functional Blocks

[0472] The ASIC is partitioned into the following major functional blocks.

[0473] 1. RAM banks **215**l, **2152**, **2153**

[0474] 2. Sequencer **2640**

[0475] 3. Dual radix (2, 4) core **2600**, including multipliers **2620** through **2627**

[0476] 4. Twiddle-factor lookup table **2610**

[0477] The algorithm used is a decimation in time (DIT) FFT. The algorithm used is an in place algorithm which means that the results of each butterfly are put back into the same locations that the operands came from. The algorithm assumes digit reversed input order and normal output order. Since the three banks of RAMS are independent, the reordering of the input data is done internally to the ASIC. This reordering is transparent to the user. Thus the user writes the data into the input RAM bank in normal order and read the data from the output RAM bank in normal order. If the user requires some other ordering, this may be accomplished by simply permuting the address line ordering.

[0478] The order of the memory for all transform sizes are given in the section titled "Sequencer."

[0479] Memory Banks

[0480] The ASIC **2101** includes three banks of RAM that are individually addressable. The RAM banks **2251**, **2253**, and **2252** are used for input data, output data and conversion data, respectively. The banks are used in order to obtain real-time execution of the FFT and to allow independent clock rates for the input and output of data in order to accommodate clocking needs of those devices connected to it. In one embodiment, the input RAM bank **2251** and output RAM bank **2252** are each organized as 1024 twenty-bit words. The lower 10 bits of each 20-bit word are used for real data and the upper 10 bits of each 20-bit word are used for imaginary data. The conversion RAM bank **2252** is organized as 1024 thirty-bit words. In one embodiment, the lower 15 bits of each thirty-bit word are used for real data and the upper 15 bits for imaginary data. The connectivities of the three RAM banks of memory are controlled by a state machine which is advanced by the 8-KHz frame signal **2108**. The state machine has three states which are defined in Table 6 as follows:

TABLE 6

Typical processing states of memory banks.

State	BANK A	BANK B	BANK C
0	Input	Convert	Output
1	Convert	Output	Input
2	Output	Input	Convert

[0481] In one embodiment, the RAM banks do not have a reset. For input and output, they are accessed at a maximum of 10.24 MHz rate. In one embodiment, a dead time of one clock cycle before the rising edge of the 8-KHz clock **2108** and two clock cycles after is required to assure the safety of the RAM bank switching. The ASIC **2101** clocks the data in on the rising edge of the input clock and clocks data out on the rising edge of the output clock.

[0482] Actual operation of the conversion RAM **2252** is a bit more complicated than is implied above. Actually only the top 10 bits of the conversion RAM **2252** participates in the bank switching between RAMs **2151**, **2152**, and **2153**. The lower 5 bits **2154** are dedicated the conversion RAM **2252**. Since all numbers are MSB aligned, no shifting net to be done on input or output. However, the last stage of the FFT calculation romp the results to ten bits. This eliminates a bias that would result had the results simply been truncated. The rounding is accomplished by adding a one to the eleventh bit position and then truncating this result.

[0483] Sequencer **2640**

[0484] The sequencer **2640** manages the processing of the FFT system **2100**. The sequencer **2640** controls the generation of addresses for the conversion RAM bank **2252** and the twiddle factor ROMs **2610** through address generation blocks **2642** and **2641** respectively. Sequencer **2640** also configures the calculation commands for the radix butterfly calculator **2630**. In addition, sequencer **2640** monitors the calculations for overflow. If at any time during the course of FFT calculation, an overflow or underflow is detect then a flag is set indicating that the results of the FFT are suspect. This overflow flag is passed along with the output data block when the RAM banks are switched. Thus the flag pin **2125** indicates that the output data block presently being read out of the output RAM bank **2253** may not be accurate. This flag **2125** may aid the system designer in providing an indicator for AGC (automatic gain control).

[0485] Dual radix (2,4) core **2600**

[0486] The dual radix core **2600** is the arithmetic element of the ASIC **2101**. In one preferred embodiment it includes eight 16-bit-by-16-bit multipliers (**2620** through **2627**) and thirty-two multiplexed adder-subtractor-accumulators **2633**. In another embodiment, it includes twelve 16-bit-by-16-bit multipliers an eight multibranched adder/subtractor/accumulators.

[0487] **FIG. 74** shows one embodiment of a dual radix core **2600**. In the embodiment shown in **FIG. 74**, conversion RAM bank **2252** is shown as part of the dual radix core. In other embodiments, conversion RAM bank **2252** is a separate functional unit, not considered part of the dual radix core **2600**. In **FIG. 74**, the data fetched from conversion RAM bank **2252** is fetched into holding latches **2612**, with

both the real (i.e., X3R, X2R. X1R and X0R) and imaginary parts (i.e., X31, X2I, X1I, and X0I) of four points being fetched in parallel substantially simultaneously. As shown in **FIG. 74**, the real and imaginary data fetched from conversion RAM bank **2252** is addressed by address generation circuit **2642** which provides four separate addresses to conversion RAM bank **2252**. The real end imaginary part of a single point both use the same address. The four separate addresses allow different sets of points to be fetched simultaneously during various stages of the transform operation.

[**0488**] As further shown in **FIG. 74**, the data fetched from conversion RAM bank **2252** includes real-and-imaginary pairs denoted X3, X2, X1 and X0. The data point pairs being denoted are X3 which includes X3R and X3I, X2 which includes X2R and X2I, X1 which includes X1R and X1I, and X0 which includes X0R and X0I. In one embodiment, the data fetched from conversion RAM bank **2252** is held for two successive multiplier clock cycles in holding latches **2612**, so that the same value gets multiplied in each of two multiply cycles. The corresponding twiddle factors are fetched on every clock cycle from twiddle factor look-up table **2610**. For example in one embodiment, on even clock cycles the real components for four twiddle factors are fetched in parallel denoted W0R. W1R, W2R, and W3R. These four real twiddle factors are fed to multipliers **2620** and **2621**, **2622** and **2623**, **2624** and **2625**, and **2626** and **2627**, respectively as shown, and multiplied by the real and imaginary components of all four data value pairs fetched from conversion RAM bank **2252**. The products of these eight multipliers **2620-2627** are fed through routing logic **2634** into all thirty-two adder/subtractor accumulators **2633** of row-column array **2632**. On the successive odd multiplier clock cycle, four imaginary twiddle factors are then fetched, shown as W0I, W1I, W2I and W3I. As shown, imaginary twiddle factor W0I is fed to both multiplier **2620** and multiplier **2621**. Similarly, imaginary twiddle factor W1I is fed to both multiplier **2622** and multiplier **2623**. Imaginary twiddle factor W2I is fed to multiplier **2624** and **2625** and imaginary twiddle factor W3I is fed to multiplier **2626** and **2627**. For the second multiplier clock, these eight multipliers are again fed with the same complex point data still held in holding latches **2612** as was used in the first clock multiplier cycle. Again after the second clock multiplier, the eight products are fed through routing logic **2634** and accumulated in adder/subtractor accumulators **2633**. Note that each twiddle factor value in twiddle factor lookup table **2610** is a complex number having a real and imaginary part (in this embodiment, the real and imaginary parts are stored in successive locations which are fetched on successive clock cycles, thus presenting 4 real values followed by four imaginary values) and each point value in conversion RAM bank **2252** is also a complex number having a real part and an imaginary part (in this embodiment, the real and imaginary parts are stored in side-by-side locations which are fetched on only every other clock cycle, thus presenting 4 real values and four imaginary values on every other clock cycle).

[**0489**] These elements are configured to perform a radix-4 butterfly calculation. The radix-4 butterfly calculations needed to provide a 1024 point FFT or IFFT and the selection of addresses and twiddle coefficients for the, e.g., 1024 points used for each of the five passes needed for a complete 1024-point transform are easily calculated and are well known in the art (see, for example, chapters 6 & 10 of *Theory and Application of Digital Signal Processing,* by Lawrence R. Rabiner and Bernard Gold, Prentice-Hall Inc, published in 1975; and page 612 et seq. of *Discrete-Time Signal Processing* by Alan V. Oppenheim and Ronald W. Schafer, Prentice-Hall Inc, published in 1989). Although a radix-2 transform is also required a separate radix-2 calculator is not required because the radix-2 operation is a subset of the radix-4 operation. Only the operands actually needed for the radix-2 operation are actually loaded. The remainder are set to zero. All arithmetic is performed in such a manner that, if an overflow or underflow should occur, then the results saturate. This prevents roll-over from contaminating the results. The function performed by the dual-radix core **2600** for a radix-4 butterfly operation supporting the forward transform is the following:

$$A'=A+BW^{1k}+CW^{2k}+DW^{3k}$$

$$B'=A-jBW^{1k}-CW^{2k}+jDW^{3k}$$

$$C'=A-BW^{1k}+CW^{2k}-DW^{3k}$$

$$D'=A+jBW^{1k}-CW^{2k}-jDW^{3k}$$

[**0490**] where A, B, C and D are the four input points, A', B', C' and D' are the four outputt points, and W^{1k}, W^{2k} and W^{3k} are the twiddle coefficients.

[**0491**] The function performed in a reverse transform is simply the complex conjugate of the above set of equations.

$$A'=A+BW^{1k}+CW_{2k}+DW^{3k}$$

$$B'=A+jBW^{1k}-CW^{2k}-jDW^{3k}$$

$$C'=A-BW^{1k}+CW^{2k}-DW^{3k}$$

$$D'=A-jBW^{1k}-CW^{2k}+jDW^{3k}.$$

[**0492**] Note that the twiddle-factor W which is used for each A on the right side of the above equations is one (i.e., the complex number 1+j0).

[**0493**] The multiplication of two complex numbers, each having a real part and an imaginary part, for example result in the following equation:

$X0\times W0=(X0R+jX0I)\times(W0R+jW0I)=(X0R\times W0R-X0I\times W0I)+j(X0I\times W0R+X0R\times W0I)=+W0R\times W0R+jX0I\times W0R$ (e.g., the first multiplier cycle in multipliers **2620-2621**) $-X0I\times W0I+jX0R\times W0I$ (e.g., the first multiplier cycle in multipliers **2620-2621**)

[**0494**] Thus four multiplier operations are needed for each complex multiply operation.

[**0495**] In order to speed the transform function, the factors for the parallel multipliers are fetched in parallel under the control of control and clocking sequencer **2640**. Routing logic **2634** routes the products of the multipliers **2620-2627** to the thirty-two adder-subtractor-accumulators **2633**. In one embodiment, eight multiplier cycles, C0 through C7, are used to generate four radix-4 butterfly operations, resulting in sixteen complex output values. For discussion purposes, row-column array **2632** is shown having four rows (A, B, C, and D) and four columns (W, X Y, and Z) of complex value pairs. The real value and the imaginary value of each of these sixteen complex value pairs has its own associated adder-subtractor-accumulator **2633**, for a total of thirty-two adder-subtractor-accumulators **2633**, as shown in **FIG. 74** and **FIG. 91**. In one embodiment, scaling-factor shift logic **2644** (under the control of bit-growth selector **2643**) is provided in the path between adder-subtractor-accumulators **2633** and conversion RAM bank **2252**. The scaling-factor shift logic **2644** provides a right-shift function of 0 bits, 1 bit, 2 bits or three bits (divide by 1, two, four or eight

respectively) on each output data value as it is being returned to conversion RAM **2252**. Bit-growth pins **2117** through **2118**, which control the divide function for each of the passes are coupled to bit-growth selector **2643** under control of sequencer **2640**.

[**0496**] FIGS. **75-82** are a table **2800** showing the order of calculations for a "normal butterfly sub-operation."**0** The data points in conversion RAM **2252** are arranged within conversion RAM **2252** such that the four input points for one radix-4 operation are each located in different sub-banks if the points are successively addressed (e.g., addresses **0**, **1**, **2**, and **3** are each in different sub-banks, e.g. sub-banks **2290**, **2291**, **2292**, and **2293** respectively), but points whose addresses differ by a factor of 4 are located in the same bank(e.g., addresses **0**, **4**, **8** and **12** are all within bank **2290**, as are address **0**, **16**, **32**, and **48**, addresses **0**, **64**, **128**, and **192**, and addresses **0**, **256**, **512**, and **768**). The butterfly passes for this second set of points (those whose addresses-mod-**4** are equal) are handled by the equations shown in the table of FIGS. **75-82**. **FIG. 75** shows the operations at each of the thirty-two adder-subtractor-accumulators **2633** at a multiplier clock cycle command denoted C**0**. For example, at C**0**, the adder-subtractor-accumulator **2633** for the real portion of the AW point in row-column array **2632** (called the AWR accumulator) gets loaded with the output (called WR) of multiplier **2620**, and the adder-subcontractor-accumulator **2633** for the imaginary portion of the DZ point in row-column array **2632** (called the DZI accumulator) gets loaded with the output (called ZI) of multiplier **2627**. By performing load operations at clock C**0**, the previous values of the accumulators do not need to be zeroed. As shown in **FIG. 91**, multipliers **2620**, **2621**, **2622**, **2623**, **2624**, **2625**, **2626** and **2627** produce products called WR, WI, XR, XI, YR, YI, ZR and ZI, respectively, however the -R and -I designations of these products are not strictly correlated to real and imaginary numbers. **FIG. 91** also shows the row and column locations for the thirty-two adder-subcontractor-accumulators **2633**, with AWR shown in the upper-left corner and DZI in the lower right corner.

[**0497**] **FIG. 76** shows the operations at each of the thirty-two adder-subtractor-accumulators **2633** at a multiplier clock cycle command denoted C**1**. For example, at C**1**, the adder-subtractor-accumulator **2633** for the real portion of the AW point in row-column array **2632** (called the AWR accumulator) gets loaded with the difference of subtracting from its previous value (called AWR, this value happens to be the WR value loaded in cycle C**0**) the output (called WI) of multiplier **2621**, and the adder-subcontractor-accumulator **2633** for the imaginary portion of the DZI point in row-column array **2632** (called the DZI accumulator) gets loaded with the sum of its previous value (called DZI, this value happens to be the ZI value loaded in cycle C**0**) and output (called ZR) of multiplier **2626**.

[**0498**] Similarly, **FIGS. 77 through 82** show the operations which take place at multiplier clocks C**2** through C**7**, respectively.

[**0499**] Since each complex-multiply operation takes a total of four multiplier operations, and two multipliers (e.g., the pair **2620** and **2621**) are used two multiplier cycles are needed for each complex-multiply option. In a 1024-point transform (i.e., either an FFT or an IFFT), four of the five passes involve sets of four points wherein all four points are in a single sub-bank (e.g., **2290**), and therefore must be fetched on four successive even-clocks. Each of these four passes takes eight clocks, called C**0** through C**7**. These four passes are each called "normal butterfly." Table **2800** shows the order of calculation for all of the suboperations for one embodiment of a normal butterfly (calculating four radix-4 butterfly operations in eight multiplier clock cycles), where each of the four points for one radix-4 butterfly are in the same sub-bank (e.g., either sub-bank **2290** or **2291** or **2292** or **2293**).

[**0500**] FIGS. **83-90** are a table **2810** showing the order of calculations for a "transposed butterfly sub-operation." The transposed butterfly sub-operation is used for one pass of each transform performed. The data points in conversion RAM **2252** are arranged within conversion RAM **2252** such that the four input points for one radix-4 operation are each located in different sub-banks if the points are successively addressed (e.g., addresses **0**, **1**, **2**, and **3** are each in different sub-banks, e.g., sub-banks **2290**, **2291**, **2292**, and **2293** respectively). The transposed butterfly passes for this one set of points (those whose addresses-mod-**4** are equal) are handled by the equations shown in the table of FIGS. **83-90**. **FIG. 83** shows the operations at each of the thirty-two adder-subtractor-accumulators **2633** at a multiplier clock cycle command denoted C**0** (note that only eight adder-subtractor-accumulators **2633** are affected, the other twenty-four do nothing). For example, at C**0**, the adder-subtractor-accumulator **2633** for the real portion of the AW point in row-column array **2632** (called the AWR accumulator) gets loaded with the result of a four-way addition of the outputs (called WR+XR+YR+ZR, these are the real-times-real portions) of multipliers **2620**, **2622**, **2624** and **2626**, and the adder-subtractor-accumulator **2633** for the imaginary portion of the AZ point in row-column array **2632** (called the AZI accumulator) gets loaded with the sum/difference of outputs (called WI−XR−YI+ZR) of multipliers **2621**, **2622**, **2625**, and **2626**, respectively. By performing load operations at clock C**0** with no accumulation of the prior value (e.g., in AWR), the previous values of the accumulators do not need to be zeroed. Note that since all four points for a single butterfly operation can be fetched simultaneously from conversion RAM **2252**, and the results of the respective multiply operations must all be combined as they are formed, five-way mixed add/subtract operations are provided for by each adder-subcontractor-accumulator **2633**.

[**0501**] **FIG. 84** shows the operations at each of the thirty-two adder-subtractor-accumulators **2633** at a multiplier clock cycle command denoted C**1**. For example, at C**1**, the adder-subtractor-accumulator **2633** for the real portion of the AW point in row-column array **2632** (called the AWR accumulator) gets loaded with the result of a five-way subtractor/addition of the outputs (called AWR−(WI+XI+YI+ZI), these are the imaginary-times-imaginary portions) of multipliers **2621**, **2623**, **2625** and **2627** and the prior contents of AWR. The adder-subtractor-accumulator **2633** for the imaginary portion of the AZ point in row-column array **2632** (called the AZI accumulator) gets loaded with the sum/difference of outputs (called AZI+(WR+XI −YR−ZI)) of multipliers **2620**, **2623**, **2624**, and **2627**, respectively.

[**0502**] Similarly, **FIGS. 85 through 90** show the four-way and five-way operations which take place at multiplier clocks C**2** through C**7**, respectively. Table **2810** shows the order of calculation for one embodiment of a transposed

butterfly (calculating four radix-4 butterfly operations in eight multiplier clock cycles), where each of the four points for one radix-4 butterfly are each in different sub-banks (e.g., one point in sub-bank **2290**, one point in **2291**, one point in **2292**, and one point in **2293**).

[**0503**] Twiddle-Factor Lookup Table **2610**

[**0504**] In one embodiment, the twiddle-factor lookup table **2610** (also called a sine-cosine ROM lookup table) comprises 512 fifteen-bit words, wherein four words can be fetched in parallel. Each complex twiddle factor value pair is fetched sequentially, wherein the first 15-bit word represents the real part of the twiddle factor value pair and the second 15-bit word represents the imaginary part, and four values are fetched simultaneously (i.e., four real values, having 60 bits total, are fetched on an even clock—e.g., clocks C**0**, C**2**, C**4** or C**6**—and four imaginary values are fetched on the following odd clock—e.g., clocks C**1**, C**3**, C**5** or C**7**). In another embodiment, the twiddle factor lookup table **2610** comprises of 256 thirty-bit words. The upper 15 bits represent the real part of the twiddle factor whereas the lower 15 bits represent the imaginary part. Although **1024** complex-value pairs are required in order to produce a 1024-point FFT or IFFT, the values are not unique, and the number of twiddle factors was reduced by a factor of four by making use of the simple trigonometric identities in mapping 360 degrees of twiddle factors to a 90-degree lookup table. In one embodiment, the twiddle-factor lookup table was designed to minimize DC offset caused by integer-based twiddle factors.

[**0505**] **FIG. 92** shows a more-detailed block diagram of an adder-subtractor-accumulator **2633**. In one embodiment, multipliers **2620** through **2627** are each a 16-bit-by-16-bit multiplier. In one embodiment, only the upper-order 16 bits of the resultant product are passed by MUX **2834**. (In one embodiment, MUX **2834** is part of router logic **2634**.) Adder-subtractor **2833** performs a five-way addition/subtraction as defined in FIGS. **83-90** and the two-way addition/subtraction as defined in FIGS. **75-82**, under the control of sequencer **2640**. In one embodiment, accumulator **2835** maintains enough bits above the binary point to accommodate overflow bits and to provide an indication of overflow which does not get lost as further addition/subtractions are performed on the accumulating data (in other embodiments, one, two, or three such bits are maintained).

[**0506**] Input and Output Timing

[**0507**] Below is the detailed timing for one embodiment of the input and output RAMs.

TABLE 7

Read Cycle for output RAM bank 2253

Symbol	Parameters	Condition	Nom
Tcc	Clock Cycle Time Pulse Width	Minimum	20 ns
Tchpw	Minimum Positive CK Pulse Width	Minimum	6 ns
Tclpw	Minimum Negative CK Pulse Width	Minimum	6 ns
Tavch	Address valid to CK high	Minimum	4 ns
Tchax	CK high to address change	Minimum	1.0 ns
Tchdox	CK high to Data Output change	Minimum	2 ns

TABLE 7-continued

Read Cycle for output RAM bank 2253

Symbol	Parameters	Condition	Nom
Tcd	CK high to data valid	Maximum	15 ns
Toe	Output Enable time	Minimum	0 ns
Toz	Output Disable time	Maximum	7 ns

NOTE: The RAM clocks for the input and output banks are limited to 10.24 MHz.

[**0508**]

TABLE 8

Write Cycle for input RAM bank 2251

Symbol	Parameters	Condition	Nom
Tcc	Clock Cycle time	Minimum	20 ns
Tchpw	Minimum positive CK pulse width	Minimum	6 ns
Tclpw	Minimum negative CK pulse width	Minimum	6 ns
Tavch	Address valid to CK low	Minimum	4 ns
Tchax	CK low to address change	Minimum	1 ns
Twch	-WE low to CK low	Minimum	4 ns
Tchw	CK low to -WE high	Minimum	1 ns
Tdivch	Data Input valid to CK low	Minimum	4 ns
Tchdix	CK low to Data input	Minimum	1 ns
Tchdov	CK low to Data Output valid	Maximum	15 ns
Tchdox	CK low to Data Output change	Minimum	2 ns

NOTE: The RAM clocks for the input and output banks are limited to 10.24 MHz.

[**0509**] Package for ASIC **2101**

[**0510**] Package Dimensions and Pinout for one embodiment:

[**0511**] The ASIC **2101** generates 5V TTL output levels and accepts 5V CMOS or 5V TTL input levels.

[**0512**] TTL Input Levels are defined as follows:

[**0513**] VIL max=0.8 Volts

[**0514**] VIH min=2.0 Volts

[**0515**] CMOS Input Levels are defined as follows:

[**0516**] VIL max=0.2*VDD (0.9V<VIL<1.1V over 4.5V to 5.5V VDD range)

[**0517**] VIH min=0.7*VDD (3.15V<VIH<3.85V over 4.5V to 5.5V VDD range)

[**0518**] TTL Output Levels:

[**0519**] VOL max=0.4 Volts

[**0520**] VOH min=2.4 Volts

[**0521**] Functional Tests

[**0522**] Testing is broken down into a functional segment to verify device functionality and a scan segment to test for faults in the physical silicon. In one embodiment, the vectors are included in a test bench compatible with LSI Logic's tools. The functions to be tested in the device are listed below.

[0523] a. FFT/IFFT Operation—Vectors are provided which are characteristic of the expected use in the system. The frequency domain vectors are passed through an inverse transform (with appropriate bit scaling) and the results stored. The vectors are then passed through a forward transform (with appropriate scaling), and this final result analyzed. These tests are performed for the 1024-, 512-, and 256-point transforms. There are 10 frames of data for each test. The test bench includes 1024 vectors for the 1024-point transform, 5120 for the 512-point transform, and 2560 for the 256-point transform. There are twice this number of vector passed through the device to complete the test. The total number of test vectors for this test segment are about 36000.

[0524] b. F/IFFT Verification—A single sinusoid is passed through the 128-, 64-, and 32-point transforms. Both forward and reverse directions are tested.

[0525] c. Bit Growth Tests. Each bit-growth pin (**2117-2118**) is exercised for the 1024- and 512-point transform in the forward and reverse direction.

[0526] d. Power Down Tests—The device is placed in the middle of a transform, then powered down. The outputs are evaluated for correct state. The device is then asked to perform a forward and reverse transform to validate that the device can function after the reset.

[0527] e. Overflow Tests—An overflow condition is induced, and the device evaluated for correct response (e.g. the overflow pin is actuated and the event does not cause an adder to wrap around). The test includes an overflow in the positive and negative direction.

[0528] f. Reset—The device is placed into the middle of a transform operation, then reset. The outputs are evaluated for correct state. The devise is then asked to perform a forward and reverse transform to validate that the device can function after the reset.

[0529] **FIG. 93** is a high-level block diagram of one embodiment of modem receiver **2402** as shown in **FIG. 71**. The analog received signal-in is first processed by bandpass-and-down-convert block **2750**. In one embodiment, the analog received signal-in is either 425 to 600 MHz or 550 to 770 MHz, and is converted by bandpass-and-down-convert block **2750** to a signal which is 100 kHz on both sides of a 18.432 MHz center frequency. In one embodiment, the tuning step size is 99 MHz. In one embodiment, analog-to-digital decimator system (ADDS) **2850** (in one embodiment, this is a Sigma-Delta decimator system that uses a Sigma-Delta analog-to-digital converter **2840**) converts this band-limited signal into decimated I and Q quadrature signals, each 15 bits wide, which have a symbol rate of 288 K symbols per second (denoted 288 KBS), which are then processed by FFT block **2849**. In one embodiment, FFT block **2849** is equivalent to FFT system **2100** of **FIG. 70**. The outputs of FFT block **2849** are then processed by post-processing block **2990** into digital data out.

[0530] **FIG. 94** is a more detailed block diagram of modem receiver **2402**. Analog received signal in is fed to band-pass filter (BPF) **2740** which limits the input signal to either 425 to 600 MHz or 550 to 770 MHz. The signal is then amplified by variable-gain amplifier **2741**, and mixed by mixer **2742** with a demodulator signal of either 627-802 MHz or 752-973 MHz generated by signal generator **2747** as controlled by phase-locked-loop block **2746**. The mixer **2742** produces a difference-frequency signal centered at 202.752 MHz which is filtered by BPF **2743**. The resultant signal is again amplified, this time by variable-gain amplifier **2744**, and then mixed by mixer **2745** with a demodulator signal of either 221.184 MHz generated by signal generator **2749** as controlled by phase-locked-loop block **2748**. The resultant signal is an analog signal centered at 18.432 MHz and having a 200 kHz bandwidth.

[0531] The resultant 18.432 MHz analog signal is then passed to an analog-to-digital decimator which, in this embodiment, is denoted as the components encircled by the dotted line referenced as Sigma-Delta decimator system (SDDS) **2850'**. The extract mix of components which are included in SDDS **2850** can vary from embodiment to embodiment (i.e., where the dotted line for SDDS **2850'** is drawn may vary).

[0532] In **FIG. 94**, the 18.432 MHz analog signal is passed through BPF **2839** which is centered at 18.432. The 221.183 MHz signal is divided by divider network **2838** to produce a 73.728 MHz signal which drives Sigma-Delta converter **2840**, and two 18.432 MHz signals (one of which is 90 degree shifted from the other) which drive digital I/Q detector **2841**. Sigma-Delta converter **2840** is any conventional Sigma-Delta converter, such as described in *An overview of Sigma-Delta Converters,* by Pervez M. Aziz et al., Vol 13, No. 1, IEEE Signal Processing Magazine, January 1996, which is hereby incorporated by reference. Sigma Delta convert **2840** achieves high resolution by oversampling the input signal at a frequency much above the Nyquist frequency, and by providing a negative feedback path which uses an analog representation, $y_a[n]$ of the quantized output signal y[n]. **FIG. 95** shows one such Sigma Delta converter **2840**, having difference block **2860** that forms u[n] which is input x[n] minus feedback $y_a[n]$. Signal u[n] then is processed by discrete-time integrator **2863** and quantiser **2864**, which is simply a comparator. By providing a sampling frequency which is high enough, the Sigma-Delta converter **2840** allows the use of a 1-bit quantizer to achieve high overall resolution.

[0533] Referring back to **FIG. 94**, the 73.728 MHz quantize output of Sigma-Delta converter **2840** is coupled to digital I/Q block **2841**. In one embodiment, digital I/O block **2841** is simply two 2-input AND-gates; one input of both AND gates is connected to the 73.728 MHz quantized output of Sigma-Delta converter **2840**, the other input of the first and the second AMD-gate is coupled to the 0° and the 90° 18.432 MHz outputs of divider **2838**. The outputs of digital I/Q detector **2841** are thus two serial streams, that represent I ad Q quadrature signals respectively. The serial I and Q signals are then fed to coarse decimator and MUX **2842**, which converts the two serial streams into a single N-bit-wide time-multiplexed I/Q parallel stream. In one embodiment, this time-multiplexed I/Q parallel stream 10 bits wide. This time multiplexed I/Q parallel stream is clocked at 2.304 MHz and provides 10 bits of I followed by 10 bits of Q, thus having 1.152 million samples of I interleaved in time with 1.152 million samples of Q. This time-multiplexed I/Q parallel stream is then fed to I/Q demux **2843** which de-

multiplexes the time-multiplexed I/Q parallel stream into separate I and Q streams clocked at 1.152 MHz each, and each 10 bits wide. These separate I and Q streams are then processed by three digital-processing blocks: DC-offset adjust block **2844** that digitally adjusts for DC (direct current) balance, DS_gain adjust block **2845** that digitally adjusts the decimated signal gain, and DS_mix block **2846** that digitally adjusts the phase.

[**0534**] The Sigma Delta decimator system (SDDS) **2850** is a N-bit A-to-D converter which generates a one-bit serial data stream having resolution and agency of N bits (in one embodiment, 15-bit resolution is obtained; in another embodiment, the A/D has a 10-bit resolution with 9-bit linearity). SDDS **2850** is running on the clock generator **2749** divided to 73.728 MHz which oversamples the SDDS input signal in order that it only passes data at the 18.432 MHz±100 kHz. approximately. The following circuits **2841**-**2847** then take that 200 kHz of frequency that Sigma-Delta converter **2840** passes and shifts it down a base band, so basically it goes from 0 Hz to 200 kHz. This a relatively slow signal and then SDDS **2850** turns that into 10-bit parallel words. The Sigma-Delta converter **2840** is outputting a serial **1** bit stream, which is ANDed with two 18.432 MHz square waves to produce serial digital I and Q that are two 18.432 MHz gated square waves.

[**0535**] In one embodiment, the entire SDDS **2850** is integrated on a single VLSI chip using 0.8 micron BiCMOS 4S+technology fabricated by IBM Corporation, with the analog circuits operating from a 5 volt supply voltage and the digital circuits operating from a 3.3 volt supply voltage. This single-chip implementation facilitates bit growth from stage-to-stage in order to prevent or reduce truncation or round-off errors. Thus 10-bit I and Q signals at the output of I/Q demux block **2843** are allowed, in one embodiment, to grow to 25bits at the output of DS_mix block **2846** through the digital processing of DC-offset adjust block **2844**, DS_gain adjust block **2945**, and DS_mix block **2846**. For example, the N bits each of the I and Q data streams a the output of I/Q demux block **2843** grow a little to N^{+} bits after the digital processing of DC-offset adjust block **2844**, N^{++} bits after DS_gain adjust block **2945**, and N^{+++} bits after DS_mix block **2846**. Decimators **2847** and **2847'** select one out of every four values from the I and Q data streams, respectively, thus producing a 288 kHz rate of 25 bits each for the I and Q streams. These then pass through scaling blocks **2848** and **2848'** which scale each data stream to 15 bits, which are denoted I' and Q' and are coupled to 15-bit FFT **2849**.

[**0536**] One consideration with the large number of signals on such a single-chip implementation is to minimize the number of different clock signals. In the embodiments described for **FIG. 94**, for example, this is accomplished by running a large number of blocks from a single clock, even though some of those blocks might be able to run off a different and slower clock.

[**0537**] Overview of Data-Delivery Architecture

[**0538**] Referring now to **FIGS. 96 and 97**, there is shown the overall architecture of a data delivery system **500** according to another embodiment of the invention. The data delivery system **500** provides high speed data access to the home **510** or office **512** (alternately referred to above in **FIG. 1** as remote units **46**) over the HFC distribution network **11** using the infrastructure of the modem-based telephony transport system **10** described hereinbove. **FIG. 97** illustrates the integration of the data delivery elements in the HDT **12**. The system allows users to have access to local content **520** and the Internet **530** through services available at the cable providers' premises or head end **32**.

[**0539**] Among other things, system **500** provides: (1) user data access to the Internet **530** and local content on a head-end server **520** through the above-described access platform; (2) support for TCP/IP and transparent bridging at the data link layer using a Dynamically Adaptive Transport Switching (DATS) methodology (described below); (3) guaranteed, reliable symmetrical data service at transfer rates from 64 Kbps to 512 Kbps, in increments of 64 Kbps, for geographically dispersed individuals; (4) guaranteed reliable, symmetric shared access to a 8.192 Mbps data pipe for geographically limited group of users connected in a routed configuration; (5) mixing of data and telephony within a single HDT **12**; (6) network management for telephony, video, and data through integrated CMISE and SNMP; (7) routed service through a head-end server; and (8) use of HISU and MISU RF modem technology for transport.

[**0540**] Referring now to FIGS. **98-100**, the Cable Data Modem (CDM) **535** for the system **500** preferably can take three forms: a stand-alone box called the Personal Cable Data Modem (PCDM) **540**, a HISU add-in card called the Data Modem Service Module (DMSM) **550**, or a MISU add-in card called the Data Modem Channel Unit (DMCU) **560**. The stand-alone PCDM **540** has several connector options; including standard F style coax cable, 10baseT Ethernet 542, and RS232 544. The DMSM add-in card preferably resides in an expansion slot on HISU **68** enclosure and will terminate a customer's computer with a 10BaseT Ethernet connection. The DMCU **560** add-in card will reside in a liner slot of the MISU and will provide a 10BaseT Ethernet routed connection to four users. Customers without an integrated Ethernet port can add one to their system at minimal cost.

[**0541**] The system **500** provides connection to head end **32** services via the DATS methodology. The DATS methodology intelligently allocates bandwidth in the system to maximize both transport bandwidth and number of users while providing guaranteed bandwidth. Under TR303/V5 switching environments a central resource within the HDT **12** (described below) provides the intelligence to allocate bandwidth and efficiently manage transport load. This capability is implemented at the customer end by initiating a connection to the head end **32** when data is available to send. When the session is initiated, the head end **32** equipment determines the amount of bandwidth to be allocated to the subscriber as configured during pre-provisioning. The connection is maintained as needed and dropped when transmission is complete. During the time that the connection is maintained, bandwidth is guaranteed, providing the efficiency of packet switching and the guaranteed bandwidth of connection switching. All processing is performed through standard R303/V5 call processing and therefore ingress completely with telephony provided over system **500**. The architecture of the system **500** provides guaranteed bandwidth and latency to all supported users. As indicated in **FIG. 101**, up to 24 concurrent users can be supported at 512 Kbps within a single 6 Mhz transport channel.

[0542] Using the DATS methodology, bandwidth is dynamically allocated to support a maximum of 240 users per 6 Mhz channel (e.g., see **FIG. 13**) at 64 Kbps. Each user on the system is guaranteed the allocated bandwidth for the duration of the session. As such, the bandwidth and latency seen by the user remains constant, independent of the traffic load, application type, or number of users. Assuming even distribution across all applications, the average frame size carried downstream is 378 bytes, while the average upstream frame size is 69 bytes.

[0543] The downstream latency from the HDT **12** is dominated by filling a 512 K data pipe, all other latencies in the system are insignificant. Therefore on average the latency to transfer a TCP/IP frame from the HDT to the customer is 5.9 msecs. With Forward Error Correction (FEC) disabled, the average latency in the upstream direction, from the customer end to the HDT is also dominated by filling a 512 K data pipe. Therefore, on average the latency to transfer a TCP/IP frame from the HDT to the customer is 1.0 msecs. Adding FEC will add up to 7 msecs to the upstream latency.

[0544] Data Transport and Framing

[0545] The system **500** provides transparent bridging and data transport A schemic representation of the data transport and framing is shown in **FIG. 102**. Upstream data traffic begins at the customer end equipment **511** where frames are put out on the Ethernet link **542**. The CDM **535** buffers the frames and encapsulates them with HDLC framing **570**. The HDLC frame **570** is then sent out over the coax by a modem **101** as one or more of the possible 240 payloads on the coax. The frame, along with other data and telephony is converted at the ODN **18** and sent to the head end **32** over optical fiber. At the head end, the CXMU **56** demodulates and sends the stream to the CTSU **54**, where it is routed to the appropriate LANU **580** as part of a MARIO data stram. The LANU **580** buffers the complete frame, stripping the HDLC framing prior to putting the frame on the local Ethernet. All routing for the Internet is performed by the head-end server **590**. The routing services could also be incorporated in LANU **580**.

[0546] In the case of downstream traffic, the heads server **590** puts Ethernet packets on the LAN. One to potentially seven LANUs **580** examine the Ethernet address and selectively pick up packets destined for the customer-end machines. Once the Ethernet packet has been accepted, the packet is framed in HDLC and sent, via a MARIO stream to the CTSU **54** according to the routing established when the call was initially provisioned (explained further below). The CTSU **54** forwards the stream to the CXMU **56** where it is sent over the HFC distribution network **11** to the customer premises equipment **511**. At the CDM **535**, all packets received are passed on to the local Ethernet connection **542**. In the case of a broadcast message, the LANU **580** at the head end will replicate the packet across all attached connections. This allows the bridge to support protocols such as ARP.

[0547] The system **500** will utilize the telephony error correction mechanism described above with respect to system **10**. Under the telephony error correction scheme, forward error correction codes are generally for upstream traffic but not for downstream traffic. Forward error correction on upstream is generated at the ISU **100** (HISU **68** or MISU **66**) and consumes the 10th bit of each DS**0**, thereby protecting each DS**0** separately. The error correction can be disabled, but this is not recommended for data transport.

[0548] The error detection/correction processing occurs on the CXMU **56** and data is delivered corrected to LANUs **580**, DSlUs **48**, in MARIO streams. Therefore, the system **500** data architecture does not explicitly have to deal with error correction. The CRC of the HDLC frames provide for a level of error detection above the error detection/correction of the CXMU **56**. Errors detected in the LANU **580** will be reported through the SNMP agent of the LANU **580**.

[0549] Component Design

[0550] The data delivery hardware for the head end **32** equipment consists of the LANU **580** which interfaces with the HDT **12**. The LANU **580** includes a board responsible for all data transport to and from the head-end server LAN **591**. In that function, the LANU **580** operates as a point-to-multipoint connection that is responsible for concentrating up to 128 DS**0**s onto a single Ethernet connection. The LANU **580** has the following features:

[0551] (1) It sits in a DS1U **48** slot and is form/fit compatible with the HDT **12** backplane.

[0552] (2) It provides 10BaseT Ethernet connection to head-end LAN.

[0553] (3) It supports multiple LANUs **580** on a single LAN through a 10BaseT connection or fast Ethernet through hub.

[0554] (4) It concentrates up to 128 DS**0**s into a single Ethernet Connection.

[0555] (5) It supports time slot assignment and super-channel aggregation across four MARIO data streams independent of the CTSU **54**.

[0556] (6) It supports Dual HDT **12** LAN ports.

[0557] (7) It maintains on-board FLASH for storage of operational code image.

[0558] (8) It supports N×64 service for super-channels up to 512 Kbps.

[0559] (9) It guarantees time ordering of multi-channel calls independent of transport system.

[0560] (10) It provides transparent bridging and of Ethernet frames between head-end LAN **591** and CDM **535**.

[0561] (11) It self-discovers Medium Access Control (MAC) address of CDM **535** and filters Ethernet frames with on-board CAM.

[0562] A high-level block diagram of the LANU **580** is shown in **FIG. 103**. The LANU **580** preferably employs a single processor, unified memory design. In this embodiment, the main processor on the LANU **580** is the Motorola MC68MH360 QUICC32 (**581**), running at 33 Mhz, which can deliver approximately 5 MIPS. The QUICC32 is actually a dual processor embedded controller that also contains a dedicated independent RISC processor communications called the CPM. The CPM along with Direct Memory Access (DMA) can access memory and move communication traffic without placing any performance burden on the main processor. In addition to acting as the host processor, the QUICC32 can also act as a slave. The LANU **580**

implementation is preferably based on 4 QUICC32s with one acting as master and the remaining three operating in slave mode. The confirmation of the four QUICC32s provide the majority of the system peripherals.

[0563] There are several types of memory **582** on the LANU **580**. The first and largest is 8 MBytes of page-mode DRAM for the storage of LANU operational code. In addition to operational code, the DRAM also holds the routing tables, data buffers, and buffer descriptors needed to process data traffic. Second, the LANUI contains 2 MBytes of FLASH memory to store an image of its operational code. On power-up, the image is loaded into DRAM. Finally, the LANU also contains 128 Kbytes of EPROM to hold boot code. The boot code will load the contents of the FLASH into DRAM on power-up. If greater performance is desired, fast SRAM can be added to hold the data buffers and buffer descriptors for the data traffic.

[0564] There are two sets of system peripherals on the LANU: those that are contained within the QUICC32s and those that are not. Regardless of location, peripheral control on the LANU **580** is managed by the System Integration Module (software) (SIM) of the master QUICC32. The SIM is responsible for managing generation of Chip Select (CS) and other control lines.

[0565] The most important of the system peripherals are the QMC HDLC controllers **586** located in the QUICC32s. The QMC of the QUICC32 can implement up to 32 HDLC controllers running at 64 Kbps and are used to process the data traffic in the MARIO streams from the CTSU **54**. The QMCs **586** can also support super channels by aggregating multiple 64 Kbit channels into higher data rate channels. The QMC **586** is implemented in the CPM of each QUICC32 and with the addition of SDMA can autonomously move communications data to and from main memory **582**. Operation of the QMC **586** is controlled by the master processor **581** through the use of buffer descriptors that reside in external memory **582**.

[0566] In addition to the QMC **586**, three additional HDLC controllers **587** are used to provide two 2 Mbps HDT backplane LAN ports and a 10 Mbit Ethernet port. As with the QMC **586**, the master processor **581** controls the HDLCs through the use of buffer descriptors, but unlike the QMC, these data structures reside in dual ported RAM (DPR) that are internal to the QUICC32s.

[0567] There are two additional system peripherals that reside outside of the master and salve QUICC32s. The first is the Rate Adaption/Ninth Bit Signaling/Time Slot Assigner logic block (RB/NBS/TSA) **588**. The RA/NBS/TSA **588**, as its name suggests has three functions. The rate adaptation function is responsible for converting the 2.56 Mbps, 9 bit data format of the input MARIOs to the 2.048 Mbps, 8 bit data format of the QMC **586** in both the receive and transmit directions. In both directions the RA is also responsible for managing any information that may be placed in the 9th bit.

[0568] The NBS is responsible for transmitting and receiving the data that is carried with each DS**0** in the ninth bit The ninth bit is used for two distinct functions. In the upstream direction the ninth bit carriers information regarding the ordering of data within a multichannel call. The signaling consists of a repeating number that indicates which time position the DS**0** occupies in the multi-channel call. The format of the upstream ninth bit signaling is shown in Table 9.

TABLE 9

Upstream Ninth Bit Signaling

Bit	Contents	Description
1	"1"	Sync Pattern
2	"1"	Sync Pattern
3	"1"	Sync Pattern
4	"1"	Sync Pattern
5	"0"	Sync Pattern
6	"0"	Sync Pattern
7	D[8]	Order Number, Bit 8 [MSB]
8	D[8]*	Inv. Order Number, Bit 8 [MSB]
9	D[7]	Order Number, Bit 7
10	D[7]*	Inv. Order Number, Bit 7
11	D[6]	Order Number, Bit 6
12	D[6]*	Inv. Order Number, Bit 6
13	D[5]	Order Number, Bit 5
14	D[5]*	Inv. Order Number, Bit 5
15	D[4]	Order Number, Bit 4
16	D[4]*	Inv. Order Number, Bit 4
17	D[3]	Order Number, Bit 3
18	D[3]*	Inv. Order Number, Bit 3
19	D[2]	Order Number, Bit 2
20	D[2]*	Inv. Order Number, Bit 2
21	D[1]	Order Number, Bit 1
22	D[1]*	Inv. Order Number, Bit 1
23	"0"	Sync Pattern
24	"0"	Sync Pattern

[0569] The numbers can range from 1 to **128** with a 0 indicating that the DS**0** has not been assigned a position. During a call, the processor **581** will monitor the ninth bit signals from all the channels and once the order has been established, the processor will configure the TSA function to order the channels. Once the order has been established, the processor will periodically monitor the ninth bit signaling to detect any changes in ordering (i.e., frequency hoping due to excessive errors).

[0570] In the downstream direction, the NBS is used to enable data transmission. Once the LANU **580** receives the ordering information for the channels, the processor will enable transmission by sending a data pattern over the downstream ninth bit of the first DS**0** of a multi-channel call. The format for the "Data Dial Tone" signaling is shown in Table 10.

TABLE 10

"Data Dial Tone" Downstream Ninth Bit Signaling

Bit	Contents	Description
1	"1"	Sync Pattern
2	"1"	Sync Pattern
3	"1"	Sync Pattern
4	"1"	Sync Pattern
5	"0"	Sync Pattern
6	"0"	Sync Pattern
7	CMD[15]	Command Bit 15, MSB
8	CMD[14]	Command Bit 14
9	CMD[13]	Commmnd Bit 13
10	CMD[12]	Command Bit 12
11	CMD[11]	Command Bit 11
12	CMD[10]	Command Bit 10
13	CMD[9]	Command Bit 9
14	CMD[8]	Command Bit 8
15	CMD[7]	Command Bit 7

TABLE 10-continued

"Data Dial Tone" Downstream Ninth Bit Signaling

Bit	Contents	Description
16	CMD[6]	Command Bit 6
17	CMD[5]	Command Bit 5
18	CMD[4]	Command Bit 4
19	CMD[3]	Command Bit 3
20	CMD[2]	Command Bit 2
21	CMD[1]	Commmnd Bit 1
22	CMD[0]	Command Bit 0, LSB
23	"0"	Sync Patern
24	"0"	Sync Pattern

[0571] Two commands are defined. The first is "Idle Sync" (bit pattern for CMD[15:0] is 0000 0000 0000 0000) is sent during idle times to synchronize the receivers. All idle syncs sent from the LANU **580** will be synchronized themselves to simplify the reception of order information in the upstream ninth bit signaling. The second command is "Data Dial Tone" (bit pattern for CMD[15:0] is 1000 0000 0000 0000) and is sent once the order of the super-channel has been established. This command will instruct the CDMs to enable transmission.

[0572] The TSA is responsible for ordering and aggregating channels that are sent to the QMCs **586**. Although TSA has the ability to aggregate up to 128 channels into a single data stream, most applications will aggregate multiple super-channels, up to 8 DS**0**s per super-channel, among four DS**1**-like channels feeding the four onboard HDLC controllers. For 1 to 32 DS**0** data streams, the DS**0**s are aggregated and sent to the QMC **586** as a 2.048 Mbps serial stream. Within a single DS**1**-like multiple super-channels can be supported by connecting to a single QUICC32 QMC **586**. The TSA can also aggregate 128 DS**0**s into a single 8.192 Mbps data stream and connect it to a QUICC32 HDLC controller. In both cases the TSA is configured to insure that the time ordering of the data is maintained.

[0573] The final peripheral that does not reside in a QUICC32 is the Contents Addressable Memory (CAM) **589**. The CAM performs memory accesses based upon data rather than address and is used to quickly determine whether an Ethernet frame should be accepted. The Ethernet controller **587***a* interfaces to the CAM **589** through glue logic and the reject input. When a frame is received that is not in the CAM, the CAM logic asserts the reject control line and the received portion of the frame is discarded. The buffer depth of the Ethernet controller is set so that no memory accesses are generated on rejected frames. The CAM is available off the shelf from MUSIC semiconductor.

[0574] The LANU **580** sits in a DS1U **48** slot at the HDT **12** and is form and fit compatible with the DS1U **48** to be backplane compatible. The LANU **580** has four major system connections: MARIO **592**, Ethernet **593**, HDT LAN **591** and clocking (input not shown in **FIG. 103**). The four MARIO connections connect the LANU to the CTSU over the backplane. The four MARIO connections provide up to 128 bi-directional, 64 Kbit channels. The Ethernet connection connects the LANU to a local 10 Mbit, 10BaseT LAN. The 10BaseT connection will take the place of a single T1 connection of a DS1U. The connection is terminated by wire-wrappmg the 10BaseT to the backplane and routing to a patch panel. For call provisioning and other system functions, the LANU **580** connects to two common 2 Mbps HDLC LANs on the backplane. Finally, system clocking is provided by an external source such as a Building Integrated Timing Supply (BITS).

[0575] Functional Description of Upstream Communications

[0576] For upstream traffic, the HDLC framed data available on the MARIO interface passes through the rate adaptation and TSA block **488**. In this block, the 2.56 Mbps MARIO interface is rate adapted down to 2.048 Mbps. As part of rate adaption, the ninth bit of each DS**0**+ of the MARIO stream is stripped and sent to the NBS logic. The ninth bit carried an order number that is used to time order the DS**0**s in multichannel calls. Once the order numbers are established, the processor **581** configures the TSA to reorder the multi-channel calls and target the super-channel to a QMC **586**. For super-channels composed of 32 or less DS**0**s, the call is placed in a single 2.048 Mbps data stream, along with other calls and sent to a QMC **586**. For 128 DS**0** calls, the DS**0**s are placed in a single 8.192 Mbps stream that is target to a QUICC32 HDLC controller **586** configured for 8.192 Mbps HDLC. Whether targeted to a 2.048 Mbps QMC or 8.192 Mbps HDLC, the frames are accumulated and transmitted on the local Ethernet LAN.

[0577] Functional Description of Downstream Communications

[0578] For downstream traffic, data on the LAN is filtered according to the destination MAC address. If the MAC address is in the Content Addressable Memory (CAM) **589**, the LANU **580** will accept the Ethernet frame. Once the frame is accepted, the LANU **588** accesses a routing table in memory **582** to select the appropriate MARIO slot for transport. The frame is then scheduled for transmission and the HDLC controller **586** takes over. In the downstream direction for 32 DS**0** or less calls, the HDLC controller **586** is responsible for creating the MARIO stream and encoding the data into HDLC format. For 128 DS**0** calls, the 8.192 Mbps HDLC data stream is split among the four MARIO interfaces (A-D). The time ordering and aggregation in the downstream direction is controlled by the TSA. After the data passes through the TSA, the ninth bit signaling information is added to indicate that data transmission is enabled. At the same time that the ninth bit signal is added, the data stream is rate adapted up to the 2.56 Mbps rate of the MARIOs.

[0579] For data movement the on-board memory **582** provides the switching and buffering necessary to move traffic from the Ethernet to the MARIO and vice-versa. The data switching provides a virtual circuit based upon routing information constructed during call provisioning that maps the MAC address to MARIO time slot. The LANU **580** constructs this routing table from information provided during call provisioning and by examining the source MAC address of Ethernet frames received from the customer end. The MAC addresses supported by the LANU are then placed in the CAM **589** where they can be used to filter Ethernet traffic.

[0580] In addition to the MARIO and Ethernet interfaces, the LANU **580** also supports two HDT backplane LAN **591** interfaces at 2.048 Mbps. The HDT LAN is maintained by

the SCNU **58** at the head end **32** and is used to pass configuration information to the LANU **580**. The combination of LANU **580**, call processing, and pre-provisioning will provide the MARIO route (time slot in the MARIO data stream) to all customer devices.

[**0581**] Customer Premises Equipment (CPE)

[**0582**] The CPE of the system **500** comes in different implementations. Although the basic data and transport remain the same across all the implementations the underlying modem technology and form factor differs. There are currently three general types of CPE defined: HSU based, MISU based, and Stand-alone (a variant of the HISU based implementation). Each of these implementations are discussed separately below.

[**0583**] Data Modem Service Module

[**0584**] A simplified block diagram of the DMSM is shown in **FIG. 104**. DMSM **550** supports up to 8 DS**0**'s for data traffic. Data is interfaced to the HISU **68** through a Service Growth Module (SGM) interface that implements the bridge router functions of the data connection. The bridge/router is based upon a 68302 embedded processor **605** with 2 MBytes of DRAM **604** and 256 Kbytes of FLASH memory **606**. One embodiment of the customer interface is a 10BaseT, 10 Mbit Ethernet connection **602**. The interface between the bridge/router and the HISU modem is a Super-LUIGI (SLUIGI) interface operating at 2.048 Mbps. Data in the upstream direction is accepted by the Ethernet connection and relayed to the HISU **101** modem over the SLUIGI interface as HDLC encoded data. In the downstream direction, data from the SLUIGI interface is passed to the HDLC controller **607** and then sent out the Ethernet connect through Ethernet controller **609**. System memory consists of 2 Mbytes of DRAM **604** which contains the operational code that implements the bridge/router functions as well as an SNMP agent. The 256 KBytes of FLASH **606** is used for storage of the operational image and can be updated with TFTP transfers.

[**0585**] In the upstream direction, the HISU interface logic **608** is responsible for generating the ninth bit signaling information for each DS**0** and interfacing with the SLUIGI stream of the HISU. The 2.048 Mbps serial data from the HDLC controller is stuffed in the appropriate time slots of the SLUIGI interface. In the case of 64 Kbit traffic, all HDLC data is placed in a single SLUIGI time slot. In the case of multi-channels calls, all HDLC is placed in adjacent SLUIGI time slot receiving the first byte of HDLC data. In addition, the interface logic will generate an order number for each DS**0** with "1" assigned to the first DS**0** and "8" assigned to the last DS**0**, "0" is reserved to indicate that the position of the DS**0** has not been set. In the event of frequency hopping, the interface logic will continue to number the DS**0** time-slots in the order that they are received. For example, under normal circumstances DS**0** ninth bit signaling would tag the time slots as "12345678-" for an eight channel call. If DS**04** is lost due to ingress, then the new order would be "123-45678." This signaling information is used at the head-end to reorder the DS**0**s independent of the frequency hopping and transport services.

[**0586**] In the downstream direction the HISU interface logic **608** is responsible for taking data from th SLUIGI interface from the RF modem **101** and giving it to the HDLC controller. In addition the HISU interface logic monitors the ninth bit signaling information of the first DS**0** to detect the "Data Dial. Tone" sequence. The "Data Dial Tone" sequence is sent by the head-end to enable data transmission. During the call provisioning process the HISU interface logic sends the ninth bit ordering information as soon as the SLUIGI time slots indicate that they can accept data. It is not until the HISU interface logic gets a positive acknowledgment through the "Data Dial Tone" that data is sent to the head-end in the upstream direction.

[**0587**] Data Modem Channel Unit (DMCU)

[**0588**] A simplified block diagram of a DMCU **610** is shown in **FIG. 105**. The DMCU supports up to 128 DS**0**s for data traffic. The data interface to the MISU is a specialized channel that sits on the MISU backplane.

[**0589**] The basic design of the DMCU **560** is very similar to the design of DMSM **550**. The most notable difference is the interface to the RF portion is two 8.192 Mhz serial channels. This allows the MISU interface to support a symmetrical 8.192 Mbps Ethernet connection. Because of the higher throughput the MISU is based on the MC68360 614 that can support both the 8.192 Mbps HDLC connection as well as the 10 Mbit Ethernet. In front of the 10 Mbit Ethernet interface **612** is a router **616** that allows four user access to the 8.192 Mbit data connection. The router **616** design insures security for all connected users. The design contains 2 Mbytes of DRAM **618** and 256 bytes of FLASH **619**. Like the HISU design, the FLASH can be remotely updated with TFTP.

[**0590**] The DMCU **610** has an equivalent interface function that moves data from the HDLC controller **611** to the RF modem and works in a very similar way to the DMSM **600** with the exception that the MISU modem interface is formatted as two SLUlGI streams that are clocked at 8.192 Mbps. Between the two SLUIGI streams; 128 DS**0**s can be carried between the HDLC controller **611** and the modem. The MISU interface logic **613** is responsible for buffering and then sending data over the dual S-LUIGI interface to and from the RF modem. In the upstream direction the MISU interface logic **613** generates order numbers for each of the 128 DS**0**s over the ninth bit of the DS**0**+. The order number on the MISU work in the same way as they do on the HISU. In the downstream direction, the MlSU interface logic **613** is responsible for moving data from the S-LUIGI streams to the HDLC controller **611**. The MISU interface logic also monitors the ninth bit data stream on the first DS**0** to detect the "Data Dial Tone" that enables data transmission. Ethernet controller **617** moves the data to the router **616**.

[**0591**] Stand-alone Data Modems

[**0592**] The stand-alone data CDMs are based upon the HISU design. In the stand-alone designs, the RF modem **101** of the HlSU is tightly integrated with the bride/router design. Like the DMSM **600**, the stand-alone supports from 64 K to 512 K. The interfaces are identical with several options: standard "F" style connector to the cable, 10 Mbit Ethernet and RS232 connection to the customers equipment.

[**0593**] System Software and Call Processing

[**0594**] In the TR-008/V2 system, calls are provisioned and nailed up at time of installation. Under this scenario or at the head-end **32** is responsible for determining the MARIO configuration and transfer rates (64 K to 512 K). The DATS

methodology of present invention utilizes TR-303/V5 call processing to provide dynamic allocation of bandwidth. To maintain the telephony oriented architecture of the access platform of the present invention, the LANU **580** takes on responsibility of a limited subset of the Central Office (CO) functions. This approach has the distinct advantage that the data sessions are fully integrated with telephony.

[**0595**] At the time of deployment, a LANU **580** will be identified as a "Master" LANU (mLANU). The mLANU will have the responsibility to maintain the CO-like functionality for all data calls to the HDT **12**. In order to perform these functions, the mLANU will represent itself to the HDT as an IDT. When the mLANU is pre-provisioned, the mLANU will be given an IDT identifier and assigned a Time Slot Management Channel (TMC) channel from the CTSU **54**. Regardless of the number of LANUs **588** in the HDT **12** a single mLANU will allocate and keep track of available DS**0**s for all the LANUs in the HDT. As customers are configured, a Call Reference Value (CRV) for the selected CDM will be assigned to identify the customer. The CRV along with the number of data channels will be added to a call provisioning database on the mLANU.

[**0596**] The call processing sequence for call origination is shown in FIGS. **106-109**. Call processing begins when the CDM generates an "Off-Hook" message over the IOC associated with the HISU, MISU or Stand alone CDM (described above). After the "Off-Hook" message is received at the CXMU **56** then sends a "Request Service" message over the backplane. LAN **591** to the CTSU **54** identifying the CRV of the originator. After receiving the "Request Service" message, the CTSU **54** sends a set-up message to the mLANU **580** over the TMC (DS**0** in a MARIO stream). The mLANU uses the CRV to access the on-board database in memory **582** and determine the number of DS**0**s to allocate the call. Once the number of channels has been determined, the mLANU identifies the DS**0** and DS**1** for the call. The mLANU then sends a "Make Cross Connect" message to the CTSU **54** over the TMC identifying the DS**0** and DS**1** and their association with the CRV. In response the CTSU **54** sends a "Req. Bandwidth" message to the CXMU **56** over the backplane LAN **591** to allocate the bandwidth in the transport.

[**0597**] Preferably, the DAT methodology and system provides that each subscriber is represented in the database as having subscribed to a certain level of bandwidth per data connection. For example, a subscriber may sign up for 512K of bandwidth. Upon call setup or connection, the DAT methodology thus assigns each user the number of channels required to achieve the subscriber's bandwith. However, in certain cases, the transport system **500** may not have the necessary bandwidth to allocate to a subscriber their normal subscripted bandwidth. Under these circumstances, the subscriber is allocated a lesser amount of bandwidth, for example 64K of bandwidth. By dynamically adjusting the amount of bandwidth assigned at call setup for each call, the mLANU can maintain a minimum level of bandwidth for each subscriber. However, existing constraints prevent small decremental bandwidth re-allocations. Constraints existing within the system **500** as described above will enforce the halving of bandwidth of some subscribers to accommodate additional subscribers, rather than by means of a more evenly distributed loading. As shown in **FIG. 107**, as the number of subscribers increase (on the horizontal axis) any given user's allocated bandwidth will halve at a certain user density. The spread around the average indicates some users will necessarily lose half their existing bandwidth earlier under loading than will others. The constraining factor in preventing a more equitable burden is the window nature of the present HISU **68** RF timing. As noted above, the HISU tunes to one of 24 IOC channels spread throughout the 6 MHz cable channel and has access to five payload channels above and five payload channels below the selected IOC frequency. It cannot borrow payload channels outside this window of ten channels so therefore there is no way for the "25th" user to borrow just one channel each from seven other users. It can only sit on top of one of the existing IOC payload windows and takeover half of the window bandwidth. At that point, 23 users would be granted 512 kbs bandwidth and two users would each get 256 kbs bandwidth. The "26th" user would result in 22 users with 512 kbs and four users with 256 kbs, and so on. This general pattern is repeated at a load of 72 users and 120 users. (There is a discontinuity in the pattern from 48 to 72 users due to the previously unused two of ten DS**0**'s per window being pressed into two DS**0** 128 kbps service.) The graph of **FIG. 109** illustrates the distribution of bandwidth to users as the number of users increases. It is so contemplated that a subscriber could have different default or standard data rates depending on the time of day or day of week, or based on system loading, such that a user can receive even more bandwidth than their standard rate under certain loading conditions, such as if the system is loaded below a predetermined threshold at the time the subscriber seeks a connection.

[**0598**] Also, using the ninth bit signaling, the mLANU can "steal" bandwidth from other (e.g. high capacity) users. This is done by moving the Data Dial Tone from a subscriber using the ninth bit signaling. This quiesces the user's line, allowing, the number of channels for that user can be reassigned to increase the bandwidth allocated to the user. This technique is also be used to decrease the number of channels assigned to a user.

[**0599**] In order to establish the transport, the CXMU **56** trains the modems (as described above with respect to system **10**) and associates the available tones with DS**0**s. Once the training is complete, the CXMU **56** sends a "Pass" message to the CTSU **54**, which in turn informs the mLANU over the TMC that the call is complete with the "Call Complete" message. In response, the mLANU **580** configures the HDLC controllers **586** and the TSA **588** on the mLANU or another LANU through communications over the backplane LAN. At this point the pipe is established but data is not yet enabled.

[**0600**] In order to actually begin data transmission two additional steps have to occur to the ninth bit signaling of the DS**0**s. At the point where the modems are trained the HISU **68** or MISU **66** interface logic **(608, 613)** will be enabled to transmit data. Once the transmit is enabled, the interface logic will begin transmitting the DS**0** ordering number in the ninth bit of each DS**0**. At the LANU **580**, the processor **581** will monitor the ninth bit signaling to determine when all DS**0**s have established their order. Once all DS**0**s have established order, the LANU **580** will send the "Data Dial Tone" pattern on the ninth bit of the first DS**0** in the

multi-channel call. When the ISU **100** receives the "Data Dial Tone" data communications we enabled and data transmission begins.

[**0601**] A session is terminated at the customer end when no data is available for transmission by generating an "On Hook" message. The call processing sequence for an "On Hook" message is shown in **FIG. 110**. When the CDM terminates the connection, an "On Hook" message is sent over the IOC to the CXMU **56**. The CXMU **56** is response sends an "On Hook" message, identifying the CRV, to the CTSU **54**. The CTSU **54** then sends a "Tear Down" message to the mLANU **584** over the TMC. At the mANU **580**, the connection is deleted from the connection database and then released. If the connection is not on the mLANU, the mLANU will send a "Release Channel" message to the target LANU **580** and also will send a "Release Cross Connect" message to the CTSU **54**. The CTSU **54** will release the cross connects used for the connection and then send a "Release Bandwidth" message to the CXMU **56**. At the CXMU **56** the mapping between tones and DS**0**s is lost and the connection is lost. When the connection is lost, the CDM will lose the "Data Dial Tone" in the ninth bit signaling of the first DS**0** of the call.

[**0602**] The LANU **580** can also be configured to bring up connections to customer-end equipment. This allows for notification of incoming e-Mail and personal Web pages without tying up idle bandwidth. To do this, the master LANU in each system will maintain a mapping between the MAC address for each data element in the system and cross that with the CRV. Then an Ethernet packet is put on the head-end LAN **591**, and a LANU **580** will read its MAC address and determine whether the connection is up to the device. If the connection is up, the packet will be forwarded over the HFC transport. If the connection is not in place, the receiving LANU **580** will generate a connection request to the mLANU. The mLANU will then signal the transport system over the TMC to bring up a connection to that device using the IOC. The receiving LANU **580** will then send the data once the connection has been established.

[**0603**] LANU **580** Software

[**0604**] The LANU software **620** is responsible for the all major function of the data concentration of the head-end equipment. A simplified schematic diagram of the LANU software is shown in **FIG. 111**. The software **620** of the LANU consists of three major components: bridging **621**, HDLC LAN manager **622**, and data IDT **623**. All three tasks will operate as applications on top of the embedded controller operating system "pSOS" kernel in the processor **581**. The pSOS kernel will provide the base for the multi-tasking operation of the software **620**.

[**0605**] The most important task to the actual transport of data will be the bridging task. The bridging task has several functions. First, the task will be responsible for providing the virtual switch between the MARIO and Ethernet interfaces. The task will be implemented as in "interrupt on receive" task that will execute at interrupt level. At either interface, is interrupt is issued when an entire frame has been received and stored in buffer memory (**FIGS. 103, 582**). During the interrupt service routine, the packet will be handed off by modifying the associated buffer descriptor after looking up the routing in the bridging table (stored in memory **582**). For upstream traffic (HDLC to Ethernet), the source of the first packet will be read to discover its MAC address. This address will be added to the bridging table and written to the Ethernet CAM **589** for filtering.

[**0606**] A second function of the bridging task is the creation and maintenance of the bridging table. The bridging table will match the MAC address of the CDM **535** with the MARIO DS**0**s so that data can be moved between the Ethernet and HDLC. During call processing, the DS**0**s that are allocated to the call will be identified by the mLANU **580** through backplane LAN (**591**) Messaging and installed in the bridging table. As described above, when the first frames begin to flow from the CDM, the source MAC address will be identified and the table entry for the CDM will be complete. At this point data will flow in both directions. Once the MAC address has been discovered the bridging table entry will remain intact until the connection is terminated by the CDM.

[**0607**] A third function of the bridging task is maintenance of an SNMP agent. SNMP traffic will be handled and processed from the Ethernet port. The agent will support a standard MB-II information database for transparent bridging. In addition, objects will be added to the MIB that are specific to the data architecture to facilitate CMISE-SNMP integration and different billing options.

[**0608**] Finally, the bridging function may support link-layer encryption/decryption on the bridged data. Encryption/Decryption may be software only or hardware assisted depending upon the desired performance of the system. In either case, this function will execute as an application on top of pSOS.

[**0609**] Another component of the LANU software **620** is the HDT LAN manager **622**. The HDT **12** LAN **591** is used to communicate system messages between the elements of the HDT **12**. During pre-provisioning, the SCNU **58** will communicate system parameters such as CRV, IDT ID, and number of channels accessible by the CDM to the mLANU **580**. These parameters will be used in the construction of the call provisioning table resident on the mLANU. During call provisioning, the mLANU will examine the provisioning table for available DS**0**s and use the HDT LAN **591** to set up MARIO configurations on other LANUs **580**.

[**0610**] Another important functions of the HDT LAN manager software **622** is support for field software upgrades. During download, the LANU **580** will take the image from the HDT LAN and store it in on-board FLASH memory. Aside from the SCNU **58**, the LANU will be the only board in the HDT **12** that will load its image from its own FLASH on power up. As such, support for image download from the SCNU **58** Ethernet port will need to be added to the SCNU software. A final function of the LAN manager software **622** is to provide the network management access to the SNMP environment of the LANU.

[**0611**] The final major task of the LANU software **620** is the data IDT **623**. As described above, the system **10** of the present invention is designed to provide access from POTS to a CO switch. As such, the burden of resource allocation and assignment of DS**0** terminates at the switch. Since the data architecture of the system **10** terminates at the head-end there is no such centralized resource in the architecture to provide the services of the switch. In order to provide the services required to terminate the data "calls" a single LANU **580** functions as the data IDT.

[0612] The function of the data IDT is to provide a single point of reference for the data resources of the HDT **12**. During pre-provisioning of the LANU hardware a LANU **580** will be designated the "Master" LANU (mLANU) and assigned an IDT identifier. The mLANU **580** will then take on the function of the switch for data calls by maintaining a table that maps CRVs to service level (# of channels). In addition, the mLANU will maintain a map of all available DS**0**s an all LANUs (including the mLANU itself) installed at the HDT. A copy of the call provisioning table will be kept in on-board FLASH so it can survive a power loss.

[0613] In order to maintain compatibility with standard telephony traffic, the means of communication between the CTSU **54** and mLANU will be a TMC connection over one of the DS**0**s within a MARIO. During call provisioning, the CTSU **54** sends a setup message over the TMC and the mLANU will respond with a "Make Cross Connect" message that identifies the DS**0**, DS**1**, and CRV for the connection. As discussed previously, the mLANU will also configure the LANU **580** for the connection through communications over the HDT **12** LAN **591**. Therefore the data IDT software **623** will emulate the switch though its communications with the CTSU **54** over the TMC using Q.931 compatible messaging.

[0614] On all LANUs in the HDT **12**, whether master or not, the data IDT software **623** will be responsible for configuring the TSA and communicating with the bridging task. In configuring the TSA, the data IDT will monitor the sequence numbers in the ninth bit signaling and appropriately configure the interconnect so that the order within a multichannel call is maintained. In addition, the data IDT software **623** will communicate the state of the connection to the bridging task to open up the data pipe.

[0615] Another important function of the data IDT software **623** is to provide the information needed to provide billing and other accounting functions. As an IDT like function the data IDT will also support standard CMISE objects.

[0616] CDM Software

[0617] Software provided in a CDM **535** (executing on the local processor **605** or **614** and represented by such elements) will provide the same types of functions. The major function of the CDM software is to provide the bridge/router (brouter) functionality at the customer-end. In supporting the brouter function the CDM software supports IP routing PPP, and SLIP. As part of IP support the CDM supports TFTP for downloading new code images. The CDM also supports a standard SNMP agent with a full MIB-II information base. Preferably, the software executes on either the **68302 (605)** or **68360 (614)** processor.

[0618] The control of the modem portion is with the standard MISU or HISU software running on a Motorola 68HC11. This code supports all the alarm conditions and communications set out above for IOC communications. The interface between the RF modem and the brouter is preferably a hardware only implementation.

[0619] Network Management

[0620] Network management of the data architecture of system **500** is preferably provided by both CMISE and SNMP. The CMISE portion of network management will be responsible for the transport mechanism for data, while SNMP will be used for data network oriented management. In this environment, SNMP is an overlay to the CMISE environment.

[0621] As with all telephony services, the data architecture will depend upon CMISE for network management of call provisioning and other transport related functions. In addition, CMISE will be responsible for accounting on data connections. This approach provides for a very flexible billing system where services can be billed per connection time, bytes passed or packets passed. Statistics will be collected in the mLANU and reported to the network manager.

[0622] SNMP management is used to provide data services management for the data architecture. In this way the data architecture will resemble a standard data architecture. Within SNMP management, the LANU **580** and CDM will maintain SNMP agents compliant with the MIB-II standard. In order to support an SNMP agent both the LANU and the CDM will need to support the UDP and IP protocols in addition to the SNMP protocol. In order to provide a single point of management for data and telephony, both CMISE and SNMP are preferably integrated into the same element manager. This level of integration will simplify billing by providing several options such as bill by connection time, bytes passed and packet passed.

[0623] Asymmetrical Data Delivery

[0624] For many casual residential users, data traffic can be characterized as mostly "bursty" (intermittent), downstream traffic with relatively, small upstream needs. The most cost effective means of delivering services such as Web browsing, file downloads, and CD-ROM preview is asymmetrical transport. The asymmetrical data transport embodiment of the invention includes a customer premise unit or Personal Cable Data Modem that contains a 30 Mbps, QAM downstream demodulator (PCDM-**30**) **620***a*, as shown in **FIG. 112**. PCDM-**30** also includes an OFDM upstream modulator supporting a minimum of 64 Kbps guaranteed, non-shared bandwidth. The connection to the customer-end equipment is 10BaseT Ethernet that supports standard TCP/IP.

[0625] At the head end **32**, an ASMU **622***a* supports multiple users on a single 30 Mbps channel which occupies 6 MHz of spectrum outside of the channels of the telephony transport **10**. In addition to the downstream modulator, the ASMU **62** concentrates the return channels by interfacing with the HDT **12**. Upstream traffic is carried over as a single DS**0** and integrated with the downstream transport on the ASMU **622***a*. The connection from the ASMU to the head-end services is 10BaseT, but higher capacity industry standard connections are also possible.

[0626] The ASMU **622***a* sits at the head end **32**, but not in the HDT **12**. The function of the ASMU **622***a* is to integrate the upstream path for up to 400 DS**0**s (Configurable from 64 Kbps to 512 Kbps) and a 30 Mbps shared downstream. Each LANU **580** will generate an 8.2 Mbps HDLC stream that contains the 64 Kbps Ethernet packets from all the users that are attached to LANU through the transport system. On the ASMU **622***a*, up to four of these, are aggregated, and sent out to the head services over 10BaseT Ethernet. In the downstream direction, the data on the 100BaseT is filtered

on the ASMU, and those packets destined for the customer end products are accepted and then modulated onto the 30 Mbps shared medium.

[0627] In order to register a modem, the customer-end modem sends out an IP packet to identify itself. This causes the LANU **580** to assign an HDLC address that is mapped to the MAC address of device. This information is passed to the ASMU **622***a* so that the HDLC address can be used by the modulator over the HDT **12** backplane LAN **591**. The HDLC address and frequency for the tuner is also sent to the customer-end over the downstream telephony path and registered at the customer end. This address is then used by the customer-end equipment to filter the 30 Mbps down channel.

[0628] One advantage of the asymmetrical system is that a relatively large number of casual users (**300**+) can be supported by a single multi-megabit downstream transport, with an optimal amount of upstream capacity. The implementation of the downstream matches the downstream of other cable data modems in use and additionally provides superior, high capacity upstream. Since casual users place lesser demands on the network (peak utilization is lower than that of business), users can be concentrated on the return channel, thus lowering head-end **32** costs.

[0629] The upstream channel in asymmetrical applications is still important due to the nature of the acknowledge protocol of TCP/IP, where blocks of data sent in the downstream must wait on an acknowledge message from the receiver before subsequent data blocks are seen. If the upstream channel is too small, the downstream channel will stall, reducing the utilization of the downstream bandwidth. By guaranteeing a minimum of 64 Kbps to each user, the asymmetrical system can deliver greater than 1 Mbps sustained to each user, matching the capacity of most residential computer equipment. Another advantage is the superior security of OFDM in the upstream. Unlike other shared upstream modem products currently available, the asymmetrical system herein described prevents information, such as bank accounts and credit card numbers exchanged during on-line Internet shopping from being "seen" by other modems on the network.

[0630] Summary of Data Delivery System Advantages

[0631] Thus, the symmetrical embodiment of system **500** provides many options for the delivery of data services over HFC distribution network **11** to the residence or business. The DMSM **550** provides from 64 Kbps to 512 Kbps access to head-end resources over a 10BaseT connection or RS232 (64 Kbps service). The service is symmetrical (same data rate upstream and downstream), non-shared and dedicated to each user, providing a guaranteed level of service. As an add-in card to the HISU, the DMSM **550** provides complete transport integration with telephony, supplying high-speed data and two POTS lines to the residence.

[0632] The PCDM **540** provides the same data transport capabilities as the DMSM **550** in a standalone configuration, packaged in a traditional modem housing. This implementation is ideal for premises or installations where telephony is not deployod.

[0633] The DMCU **560** is an MISU channel unit that provides higher data rates than either the DMSM or PCDM-512K. The DMCU **560** router manages four subscribers who share up to 8.192 Mbps of symmetrical bandwidth. The router implementation guarantees that all four subscribers on the DMCU **560** have private connections. The DMCU S**60** works well for multiple dwelling installations for Internet access and small business connections where symmetrical, non-shared data access is required.

[0634] At the head end, the LANU **580** provides the concentration of up to 110 DS**0**s in flexible combinations of various data rates, from 641 Kbps to 512 Kbps for residential, and up to 8.192 Mbps for business applications on a single, industry standard 10BaseT connection . An HDT **12** can be configured with up to seven LANUs, concentrating up to 700 DS**0**s. In addition to the industry standard transparent bridging function, the LANU also provides the intelligence for the dynamic, adaptive allocation of bandwidth capacity to optimize transport during times of heavy loading. This capability enables an HFC service provider using system **10** to mix residential and business data services in a single 6 Mhz channel without compromising the quality of service for business connections during peak Internet access times. Dynamic-allocation allows the customers units to efficiently utilize the data transport by dropping connections at times of no traffic and re-establishing them when data is ready to send. Each time a connection is established the LANU **580** will allocate bandwidth of up to a maximum of 512 Kbps, depending upon the network load, with a minimum of 64 Kbps. Finally, the LANU collects detailed traffic statistics that can be used for a variety of billing methods, for instance bill by connect time.

[0635] System **500** is particularly effective in meeting the special needs and higher expectations of business applications. Business tend to require a higher level of upstream signaling in order to support applications such as telecommuting and videoconferencng. Most cable data modem network architectures can provide only limited upstream capacity, but ADC is able to, offer a very high capacity upstream due to the efficiency of OFDM and frequency agility.

[0636] Guaranteed bandwidth is of equal importance to upstream capabilities. Businesses must have full access to their pipeline at all times, regardless of other traffic on the network. With system **500**, once a premium user's bandwidth has been established, it cannot be diminished, regardless of the number of users who subsequently access the network.

[0637] The security of the data being is also a major concern to business. Security at the transport layer (encryption and secure key exchange) and at the network layer (filtering) is provided by current transport technologies. System **500** also provides additional security at the physical layer, made possible by utilizing frequency scrambling within the OFDM transport.

[0638] The symmetrical product line is well suited for "power" Internet users who use their PC's not only for casual Web browsing but for remote LAN access, telecommuting, real-time audio, and possibly video teleconferencing. While these users are demanding, they are frequently early adopters of technology who will push the limits of Internet access and Internet application, making the symmetrical, nonshared, guaranteed quality of service of the symmetrical products a requirement.

[0639] For both residence and business users, the symmetrical embodiment of system **500** provides for superior

integration with telephony. By utilizing OFDM transport in both the upstream and downstream, the symmetrical system can carry data in the same 6 Mhz channel as telephony traffic. This capability is ideal for smaller installations and early deployment where efficient use of spectrum is important. In addition, OFDM provides a very secure data delivery stern by implementing a point-to-multipoint bridge for data where two customer premises units never share the same digital data stream.

[0640] The delivery of data over system **500** requires the efficient allocation of available bandwidth and network management of system resources.

[0641] System **500** provides a completely scalable data architecture by dynamically allocating bandwidth for data traffic through its utilization of a subset of standard TR303/V5 call processing software. This system capability gives HFC service providers the flexibility to tailor the configuration of head-end resources to satisfy the diverse needs of their subscriber base. Subscriber services can be provisioned at the head end as symmetrical fixed, symmetrical variable, or asymmetrical services. As the subscriber mix changes or subscribers upgrade service, head-end resources can be re-provisioned to meet the new requirements. For example, users can be easily reconfigured to upgrade from 64 Kbps service to 512 Kbps or even from asymmetrical to symmetrical. For capacity planning, data bandwidth is allocated as a number of DS**0**s to potential users with a single HDT supporting up to 720 DS**0**s. The number of users supported is then a function of service level (number of DS0S) and concentration ratio (number of users per DS**0**).

[0642] To ensure that service providers have an effective tool to manage their cable data networks, system **500** offers an integrated data/telephony network management solution. Data management is based on industry standard SNMP agents and MIBs (management information bases), which are then combined into an integrated data/telephony network management environment. Integration of data delivery and telephony into a single network management system has several advantages:

[0643] (1) Symmetrical data, asymmetrical data, and telephony elements can be managed by the same element manager.

[0644] (2) Less support staff is required.

[0645] (3) Better integration with billing.

[0646] (4) Better fault isolation.

[0647] (5) Lower Mean Time to Repair (MTTR).

[0648] Thus, system **500** provides a single, integrated system that can meet the diverse needs of potential subscribers, from casual Internet browsers to high-capacity business users. The integrated solution gives HFC service providers a single point of network management that results in reduced support costs, reduced staffing costs, and shortened time to turn-up new services. Finally, the OFDM technology of system **500** provides data video and telephony services in a bandwidth-efficient system that reduces the demands on a very valuable commodity for HFC service providers spectrum.

[0649] ATM Embodiment

[0650] The system **500** of the present invention can also be configured to carry data from an Asynchronous Transport Mode (ATM) network. As shown in **FIGS. 114 and 115**, system **10** or **500** of the present invention is modified to include an ATM multiplexer/modulator **650** which can receive ATM data from an ATM network **652** and modulate it onto the HFC network. In one preferred embodiment, digital video data is delivered over ATM network **652**, multiplexed and modulated using multiplexer/modulator **650** onto the HFC network in RF digital OFDM format on assigned data and/or telephony channels between the head end and a subscriber, as for example described above with respect to system **10** or **500**. A digital set top box **654** receives the digital video, formatted for example in 4.0 Mbps MPEG or equivalent, and converts it to video for display on a television **656**. A return path to the HDT **12** over a telephony or data channel allows for interactive digital video. A video server **658** and ATM switch **660**, feeding the ATM multiplexer/modulator **650**, is shown in **FIG. 115**.

Embodiment of Control Aspects of Telecommunications System Channel Manager

[0651] In one embodiment communication system **10** of **FIG. 1** includes channel manager **900** of **FIG. 59** to control various aspects of the dynamic allocation of channels to ISUs **100**. For example, channel manager **900** assigns each ISU **100** to a subband, allocates channels in the subband to an ISU to complete a communication link, and monitors the channel to detect and avoid use of corrupted channels. Channel manager **900** implements further functions as described below to coordinate the use of the channels in a 6 MHz transmission channel to ISUs **100**. channel manager **900** may comprise software executed by a processor resident in each CXMU **56** of each HDT **12**. Channel manager **900** receives events from board support software **902**, IOC and modem communicators **904**, ISU ranger **906**, and administrator **908**. Channel **900** also sends messages to IOC and modem communicator **904** for allocation or reallocation of channels. Channel manager **900** uses two types of channels to communicate control data to the ISUs. First, channel manager **900** broadcasts control data over the IOC channels to the ISUs. The control data on the IOC channels contain an identification signal that indicates the ISU to receive the control data. Further, channel manager **900** uses an ISU demand link channel, referred to as an IDL channel, for non-time-critical transport of data between head end **32** and an ISU when the data is of a size that would benefit from a transmission channel with more bandwidth than the IOC. Typically, the data rate for the IOC channel is 16 Kbps and the data rate for the IDL channel is 64 Kbps due to the amount of data contained in each package or frame. Typically, control signals contain four data bytes or less per frame or package. The IDL channel is used to transmit data packages that are larger than this. For example, the IDL channel is used to download software to an ISU, provision a channel unit, transmit future channel unit functions, or transmit protocols. In one embodiment, HDT **12** only implements one IDL at a time. The IDL channel is described in more detail below.

[0652] Subband Assignment and Channel Allocation

[0653] Channel manager **900** is responsible for assigning an ISU to a subband and for allocating payload channels for

communications links to the ISU. Appropriate selection of subband and payload channel improve the performance of communication system **10**. Channel manager **900** further monitors the channels and reassigns subbands and reallocates channels as necessary to maintain acceptable communications links between head end **32** and ISUs **100**.

[**0654**] Subband assignment

[**0655**] Channel manager **900** selects a subband for an ISU in several circumstances; during acquisition when an HISU is assigned to a subband that has insufficient payload channels to meet a request and during an HISU IOC timeout event. An IOC timeout event occurs when acknowledgements are not received by channel manager **900** from an ISU within a specified time period. With a timeout, it is assumed that the downstream communications to the ISU are still in tact even though the upstream communications have become corrupted due to noise or collisions. Thus, a message on the IOC to retune to a new subband is assumed to reach the ISU despite the lack of an acknowledgment.

[**0656**] In each case in which an ISU is assigned to a subband, channel manager **900** uses various critea to select the subband for an ISU. **FIG. 62** is a flow chart that illustrates one embodiment of a method for assigning an ISU to a subband. According to this method, channel manager **900** first selects a subband. Channel manager **900** then determines whether addition of the ISU to the subband would provide an acceptable load on the IOC channel. For example, channel manager considers the number of ISUs assigned to a subband, channel manager considers the type of ISU and the likely load that the ISU will place on the IOC channel. By considering these factors, channel manager **900** can selectively distribute the load on the IOC channels so as to facilitate timely communication of control data to and from the ISU. This also allows channel manager **900** to evenly distribute the ISUs over the available subbands such that a like number of ISUs occupy each subband. Channel manager **900** also weighs the number of available channels in the subband and their transmission quality as recorded in the tables of channel manager **900**. Channels with longer low-error rate histories will be used first. Channels previously marked bad and reallocated for monitoring will be used last. Based on these criteria, channel manager selects a subband for each ISU.

[**0657**] **FIGS. 63, 64** and **65** are frequency spectrum diagrams that illustrate initial assignment of HISUs and MISUs to various subbands in a 6 MHz transmission channel. These Figures show that channel manager **900** attempts to evenly distribute the ISUs across the transmission channel. As depicted in **FIG. 63**, channel manager **900** begins assign subbands at the middle of the 6 MHz transmission channel. Channel manager **900** then moves out toward the ends of the transmission channel. For example, the first HISU is assigned to subband number **12** and the twenty-fourth HISU is assigned to subband **0**. It is noted that more than one ISU can be assigned to a subband. As depicted in **FIG. 64**, channel manager **900** initially assigns the first MISU to subbands **0** through **12** and the next MISU to subbands **11** through **23**. As depicted in **FIG. 65**, when HISUs and MISUs are assigned to the same subbands, channel manager assigns the subbands so as to evenly distribute the ISUs over the available subbands. It is noted that the factors listed for use in selecting a subband are shown by way of example and not by way of limitation. Other factors can be added and the weight given to each factor can be adjusted without departing from the spirit and scope of the present invention.

[**0658**] Channel allocation

[**0659**] **FIG. 60** is a flow chart that illustrates one embodiment for a method for allocating payload channels in a subband by channel manager **900**. Channel manager **900** attempts to maintain an acceptable distribution of bandwidth within a subband to reduce the need for reallocation of payload channels within the subband. Further, the goal is to allocate channels appropriately across the 6 MHz transmission channel to avoid having to reallocate channels that are currently in use. A channel can be allocated to an ISU only from the available channels in the subband to which the ISU is assigned.

[**0660**] Channel manager **900** receives a request for allocation of a payload channel from either the SCNU **58** or CTSU **54**. At block **912**, channel manager **900** decides whether sufficient payload channels are available in the current subband to fulfill the request. If sufficient channels are available, the method proceeds to block **914** and determines whether one of the available channels is the IDL channel. If the IDL channel is not one of the available channels, channel manager **900** allocates a channel for each channel requested by CTSU **54** or SCNU **58** at blocks **916** and **918**. Channel manager **900** selects the channels based on several criteria that increase the likelihood of achieving a connection with acceptable quality levels. For example, channel matter **900** can use the method shown in **FIG. 61**. According to this method, channel manager **900** begins the selection process by identifying available payload channels that are located toward the center of the 6 MHz transmission channel. Typically, channels that are nearer to the edge of the 6 MHz channel exhibit higher bit error rates than the channels that are closer to the center. Further, channel manager **900** can also consider limitations of the ISU and the requested service in selecting a payload channel. For example, the ISU may be preset for use only with odd or even payload channels. This information may be included in a ROM on the ISU and provided to the channel manager when channel allocation is requested or during acquisition. Further, channel manager **900** uses data on the quality of transmissions over the identified channels stored in tables in channel manager **900** to determine which available payload channels have an acceptable error history, e.g., bit error rate. Other appropriate criteria can be used in channel selection that also tend to increase the chances of producing a connection with acceptable quality. Based on these criteria, channel manager selects a payload channel to allocate to the ISU.

[**0661**] If, at block **914**, channel manager **900** determines that one of the available channels is the IDL channel, channel manager **900** deallocates the payload channel allocated to be the IDL channel at blocks **920** and **922** due to the lower priority of communications over the IDL channel.

[**0662**] If, at block **912**, channel manager **900** determines that sufficient payload channels are not available in the current subband, channel manager **900** determines whether the request is for an HISU **68** or an MISU **66** at block **924**. If the request is for an MISU **66**, channel manager **900** sends a message to the requestor that the request has failed at block **926**.

[0663] If, at block **924**, channel manager determines that the request is for an HlSU, then channel manager **900** selects a different subband at block **928** by weighing the criteria as described above with respect to selecting a subband. Channel manager **900** further marks the channels unavailable in the new subband at block **930** and deadlines channels allocated to the ISU in the prior subband at block **932**. At block **934**, channel manner **900** assigns the new subband and proceeds to allocate channels as necessary at blocks **916** and **918**.

[0664] An example of reassigning an ISU to a new subband to accommodate a request for a payload channel is shown in **FIGS. 66 and 67**. In this example, ISUs A, B, C, and D are initially assigned to subband **4** and ISUs E, F, and G are assigned to subband **17** as depicted in **FIG. 66**. In subband **4**, all payload channels except payload channel **0** are allocated. In this case, channel manager **900** receives a request for two payload channels for ISU C. Since only one payload channel is available, channel manager **900** reassigns ISU C to subband **17** which has sufficient payload channels available to handle the current load of ISU C plus the additional two payload channels as shown in **FIG. 67**.

[0665] Channel reallocation

[0666] Channel monitoring and allocation or reallocation based thereon may be used to avoid ingress. External variables can adversely affect the quality of a given channel. These variables are numerous, and can range from electromagnetic interference to a physical break in an optical fiber. A physical break in an optical fiber severs the communication link and cannot be avoided by switching channels, however, a channel which is electrically interfered with can be avoided until the interference is gone. After the interference is gone the channel could be used again.

[0667] Channel Monitoring

[0668] Channel monitor **900** monitors the payload channels for errors to help in determining which channels are acceptable for transmission for specific services. One input to channel manager **900** is parity errors which are available from hardware per the DS**0**+ channels; the DS**0**+ channels being 10-bit channels with one of the bits having a parity or data integrity bit inserted in the channel as previously discussed. The parity error information on a particular channel is used as raw data which is sampled and integrated over time to arrive at a quality status for that channel. In one embodiment, parity errors that are detected on downstream payload channels are communicated to head end **32** over an associated upstream channel. When the error is detected in the downstream transmission, the parity bit for the upstream transmission is corrupted by intentionally setting parity bit to the wrong value to indicate the incorrect parity in the downstream transmission path. Thus, the ISU informs the head end of errors in the downstream path.

[0669] To monitor the payload channels, channel manager **900** needs an active upstream signal on each payload channel. However, at any given time, some payload channels may not be allocated and some allocated channels may not be active. Thus, these payload channels do not provide the necessary upstream signals to the head end to monitor the quality of the payload channels. To compensate for these idle and unallocated payload channels, channel manager **900** places these channels in loop back mode to monitor the quality. In this case, channel manager **900** sets up the payload channel, transmits data to the ISU on the payload channel and the ISU transmits back specified data on an associated upstream payload channel. Channel manager **900** monitor these channels at the head end to determine error rates for the channels. Thus, the unallocated or idle payload channel can be monitored for errors the same as with active channels. The goal of channel manager **900** is to have payload established on all of the payload channels at a given time. However, it may be acceptable to monitor the performance of each channel at least once an hour if not active.

[0670] Channel manager **900** randomly selects and uses ISUs to monitor payload channels in loopback mode described above. This provides several benefits to the system. First, this allows channel manager to handle the diverse layout of a cable plant. Channel manager **900** sets up and uses paths over different legs from the various ODNs of the system. Further, random cycling of the ISUs used in the loop back mode allows the system to properly distribute power in the coaxial network. Specifically, this random selection of ISUs for loopback mode applies to concentration type services.

[0671] As described below, some ISUs are powered down when not active. When the ISU is powered down, the upstream modem at the head end detects this condition and sends a specified signal to the CXMC so that channel manager does not use the ISU for loop back purposes. The powered down ISUs do not produce unnecessary errors.

[0672] **FIG. 68** is a flow chart that illustrates a method for monitoring payload channels by channel manager **900**. Channel manger **900** reads parity error registers of the CXMU **56** are read every 10 milliseconds. Generally, the error counts are used to update the channel quality database and determine which (if any) channels require reallocation. The database of channel manager **900** contains an ongoing record of each channel. An accumulator sums the errors with previously recorded errors to update the database. The database organizes the history of the channels in categories such as: current ISU assigned to the channel, start of monitoring, end of monitoring, total error, errors in last day, in last week, number of seconds since last error, several errors in last day, in last week, and current service type, such as ISDN, assigned to the channel. When the channel is a regular (non-loop back) payload channel, channel manager **900** determines whether the performance statistics in the database are within service specific threshold. When the statistics unacceptably exceed the threshold, channel manager **900** reallocates the channel using a "make before break" procedure to reduce the disruption from reallocating the channel. Thus, channel manager **900** allocates the new payload channel for the connection before deallocating the current payload channel.

[0673] Two issues presented by periodic parity monitoring as described above must be addressed in order to estimate the bit error rate corresponding to the observed count of parity errors in a monitoring period to determine if a channel is corrupted. The first is the nature of parity itself. Accepted practice for data formats using block error detection assumes that an errored block represents one bit of error, even though the error actually represents a large number of data bits. Due to the nature of the data transport system, errors injected into modulated data are expected to randomize the data. This

means that the average errored frame will consist of four (4) errored data bits (excluding the ninth bit). Since parity detects only odd bit errors, half of all errored frames are not detected by parity. Therefore, each parity (frame) error induced by transport interference represents an average of 8 (data) bits of error. Second, each monitoring parity error represents 80 frames of data (10 ms/125 μs). Since the parity error is latched all errors will be detected, but multiple errors will be detected as one error.

[0674] The bit error rate (BER) used as a basis for determining when to reallocate a channel has been chosen as 10^{-3}. Therefore, the acceptable number of parity errors in a one second interval that do not exceed 10^{-3} must be determined. To establish the acceptable parity errors, the probable number of frame errors represented by each observed (monitored) parity error must be predicted. Given the number of monitored parity errors, the probable number of frame errors per monitored parity error, and the number of bit errors represented by a frame (parity) error, a probable bit error rate can be derived.

[0675] A statistical technique is used and the following assumptions are made:

[0676] 1. Errors have a Poisson distribution, and

[0677] 2. If the number of monitored parity errors is small (<10) with respect to the total number of "samples" (**100**), the monitored parity error rate (MPER) reflects the mean frame error rate (FER).

[0678] Since a monitored parity error (MPE) represents 80 frames, assumption **2** implies that the number of frame errors (FEs) "behind" each parity error is equal to 80 MPER. That is, for 100 parity samples at 10 ms per samples the mean number of frame errors per parity error is equal to 0.8 times the count of MPEs in one second. For example, if 3 MPEs are observed in a one second period, the mean number of FEs for each MPE is 2.4. Multiplying the desired bit error rate times the sample size and dividing by the bit errors per frame error yields the equivalent number of frame errors in the sample. The number of FEs is also equal to the product of the number of MPEs and the number of FEs per MPE. Given the desired BER, a solution set for the following equation can be determined.

$$\left(MPE\frac{FE}{MPE}\right) = 0.8MPE$$

[0679] The Poisson distribution, as follows, is used to compute the probability of a given number of FEs represented by a MPE $_{(X)}$, and assumption **2**, above, is used to arrive at the mean number of FEs per MPE (μ).

$$P(x) = \frac{e^{-\mu}\mu^{x}}{x!}$$

[0680] Since the desired bit error rate is a maximum, the Poisson equation is applied successively with values for $_{X}$ of 0 up to the maximum number. The sum of these probabilities is the probability that no more than $_{X}$ frame error occurred for each monitored parity error.

[0681] The results for a bit error rate of 10^{-3} and bit errors per frame error of 1 and 8 are shown in Table 11.

TABLE 11

	Bit Error Rate Probability			
Bit Errors per Frame Error	Monitored Parity Errors	Maximum Frame Errors/Monitored Parity Error (x)	Average Frame Errors/Monitored Parity Error (μ)	Probability of BER <-10^{-3}
8	2	4	1.6	98%
	3	3	2.4	78%
	4	2	3.2	38%
1	8	8	6.4	80%
	9	7	7.2	56%
	10	7	8.0	45%

[0682] Using this technique, a value of 4 monitored parity errors detected during a one second integration was determined as the threshold to reallocate service of an ISU to a new channel. This result is arrived at by assuming a worst cast of 8 bit errors per frame error, but a probability of only 38% that the bit error rate is better than 10^{-3}. The product of the bit errors per frame monitored parity errors and maximum frame errors per monitored parity error must be 64, for a bit error rate of 10^{-3} (64 errors in 64 k bits). Therefore, when the sampling of the parity errors in the error timer event is four or greater, the channel allocator is notified of a corrupted channel.

[0683] DS**0** reordering

[0684] Some telecommunications services use multiple DS**0**s (payload channels) to form a communication link in communication system **10**. For example, ISDN uses three DS**0**s to form three payload channels identified namely as B**1**, B**2** and D. To operate properly, the DS**0**s typically are assigned in a specific sequence. Once the payload channels for the service are assigned, the channel unit associated with the service expects to receive the payload channels in a specific order. When one of the payload channels becomes corrupted, channel manager **900** allocates a different DS**0** channel for the corrupted channel and the sequence of the DS**0**s is altered.

[0685] This problem could be avoided by reallocating all three DS**0**s. However, this is a time consuming process and could cause transient disruption of the service. As an alternative, channel manager **900** can assign an address to the DS**0**s when the multiple DS**0** service is initiated. This address can be used by the channel unit to reconstruct the order of the DS**0**s on the fly if one or more of the DS**0**s is reallocated out of sequence with the other DS**0**s. For example, in the channel enable signal from CXMU **56** on the IOC channel, a BIC state signal can be used to identify the correct order for each DS**0**. Thus, channel manager **900** can allocate the DS**0**s in any order and the channel unit can remap the DS**0**s to the correct order at the ISU. It is noted that the DS**0**s must still be allocated in different time slots.

[0686] ISU Data Link (IDL) Channel

[0687] The IDL is a standard payload channel that is dynamically assigned to transmit control data between HDT **12** and ISU **100** when the amount of data exceeds the parameters of the lower bandwidth IOC channel. The IDL

channel can provide full duplex communication or simplex broadcast from HDT **12** to one or more ISUs **100**. Channel manager **900** dynamically allocates the IDL channel as needed for non-time critical transport of data as described above.

[**0688**] The IDL messages in both directions are variable in length. The IDL data is transmitted over HFC distribution network **11** at a rate of 64 Kbps which is one byte per 8 kHz frame. The IDL channel uses one of the 240 payload channels and the protocol for transmitting IDL messages is handled by the processor on CXMU **56**. The processor uses cyclical redundancy codes (CRC) and positive acknowledgments to manage error checking of IDL messages.

[**0689**] The IDL channel can be used to transmit various kinds of data. For example, the IDL channel can be used to provide data to an ISU to configure a payload channel for use with a specific protocol. For example, the IDL channel can be used to down load data to configure a payload channel for use with the LAPB protocol or any other appropriate protocol, including proprietary protocols. Similarly, the IDL channel can be used to download software to an ISU.

[**0690**] Transmission over the IDL channel has a lower priority than regular payload transmissions. Thus, channel manager **900** deallocates an IDL channel before completion of the data transmission when channel manager **900** receives a request that requires use of the payload channel that is currently allocated to the IDL.

[**0691**] **FIG. 69** is a flow chart that illustrates an embodiment of a method for allocating a payload channel to the ISU data link. At block **330***a,* channel manager **900** receives a request for an IDL channel. At block **332***a,* channel manager **900** determines whether a payload channel is available. If a payload channel is available, channel manager **900** allocates the payload channel to the IDL channel and the data is transmitted to the identified ISU. If, however, a channel is not available, channel manager determines whether one of the allocated channels is idle by checking the hook state of a line of a channel unit. If the line is on hook, then channel manager **900** reallocates the channel to the IDL channel until the IDL transmission is complete. If however, channel manager receives a request for a communication link to the line of the channel unit, channel manager interrupts the IDL channel and reallocates the payload channel to the channel unit.

[**0692**] Power Down

[**0693**] Channel manager **900** can power down an ISU during periods of non-use to reduce energy costs of communication system **10**. To power down the ISU, channel manager **900** must determine that all conditions for powering down the ISU are met. For example, channel manager **900** can determine if the lines of the channel units of the ISU provide service that can be powered down. Such services may include, for example, analog services such as POTS and COIN. Further, the lines must be idle. For example, channel manager **900** can determine if a line is idle based on the line's hook status or other appropriate criteria. Channel manager **900** checks the status of the lines each time a line goes from off-hook to on-hook. Channel manager **900** further checks the status of the lines every second to monitor the hook status. It is noted, however, that channel manager **900** will not power down an ISU that is the monitoring ISU for a subband.

[**0694**] When channel manager **900** determines that an ISU can be powered down, the ISU's transmitter is disabled. Head end **32** detects the loss of power to the ISU and sends an idle pattern upstream to the switch. An IOC control message to of from the IOC will power-up the ISU. The IOC traffic to or from the ISU indicates to the background task in charge of powering down ISUs to check the ISU against the criteria for powering down again.

[**0695**] It is understood that the above description is intended to be illustrative, and not restrictive. Many other embodiments will be apparent to those of skill in the art upon reviewing the above description. The scope of the invention should, therefore, be determined with reference to the appended claims, along with the full scope of equivalents to which such claims are entitled.

Further Embodiment of Telephony Transport System

[**0696**] With reference to **FIG. 116, a** general description of a hybrid fiber/coax communications network **1006** in with the present invention shall be described. Telephony a video information from existing telephone and video services generally shown by trunk line **1008** is received by and processed by head end **1010**. Head end **1010** includes a plurality of host distribution terminals (HDT) **1012** for telephony data interface and video host distribution terminal VHDT **1014** for video data interface. Host distribution terminals **1012** and VHDT **1014** include transmitters and receivers for communicating the video and telephony information between the video and telephony signal distribution network **1006** in accordance with the present invention and the exiting telephony and video services as represented generally by line **1008**.

[**0697**] The video information is optically transmitted downstream via optical fiber line **1017** to splitter **1018** which splits the optical video signals for transmission on a plurality of optical fibers **1022** to a plurality of optical distribution nodes **1026**. The HDT **1012** transmits optical telephony signals via optical fiber link **1020** to the optical distribution nodes **1026**. Thee optical distribution nodes **1026** convert the optical video signals and telephony signals for transmission as electrical outputs via a coaxial distribution system **1007** to a plurality of remote units **1042**. The electrical downstream video and telephony signals are distributed via a plurality of coaxial lines **1029** and coaxial taps **1034** of the coaxial distribution system **1007**.

[**0698**] The remote units **1042** include means for transmitting upstream electrical data signals including telephony information from telephones **1076** and data terminals **1073** and in addition may include means for transmitting set top box information from set top boxes **1078**. Th upstream electrical data signals are provided by a plurality of remote units **1042** to an optical distribution node **1026** connected thereto. The optical distribution node **1026** converts the upstream electrical data signals to an upstream optical data signal for transmission via optical fiber link **102**O to the head end **1010**.

[**0699**] The present invention shall now be described in further detail with reference to FIGS. **116-123**. The first part of the description shall primarily deal with downstream transmission and the second part of the description shall primarily be with regard to upstream transmission. The

video and telephony distribution **1006** in accordance with the present invention, includes head end **1010** which receives video and telephony information from video and telephony service providers via trunk line **1008**. Head end **1010** includes a plurality of host distribution terminals **1012** and a video host distribution terminal **1014**. The HDT **1012** includes a transmitters and receivers for communicating telephony information, such as T1, ISDN, or other data services information, to and from telephony service providers via trunk line **1008** and the VHDT **1014** includes a transmitters and receivers for communicating video information, such as cable TV video information and interactive data of subscribers to and from video service providers via trunk line **1008**.

[**0700**] The VHDT **1014** transmits downstream optical signals to a splitter **1018** via video feeder optical fiber **1017**. The passive optical splitter **1018** effectively makes four copies of the downstream high bandwidth optical video signals. The duplicated downstream optical video signals are distributed to the correspondingly connected optical distribution nodes **1026**. One skilled in the art will readily recognize that although four copies of the downstream video signals are created, that any number of copies may be made by an appropriate splitter and that the present invention is not limited to any specific number.

[**0701**] The splitter **1018** is a passive means for splitting broad band optical signals without the need to employ expensive broad band optical to electrical conversion hardware. Optical signal splitters are commonly known to one skilled in the art and available from numerous fiber optic component manufacturers such as Gould, Inc. In the alternative, active splitters may also be utilized. In addition, a cascaded chain of passive or active splitters would further multiply the number of duplicated optical signals for application to an additional number of optical distribution nodes and therefore increase further the remote units serviceable by a single head end. Such alternatives are contemplated in accordance with the present invention as described by the accompanying claims.

[**0702**] The VHDT **1014** can be located in a central office, cable TV head end, or a remote site and broadcast up to about 112 NTSC channels. The VHDT **1014** includes a transmission system like that of a LiteAMp™ system available from American Lightwave Systems, Inc., currently a subsidiary of the assignee hereof. Video signals transmitted optically by amplitude modulation of a 1300 nanometer laser source at the same frequency at which the signals are received (i.e. the optical transmission is a terahertz optical carrier which is modulated with the RF video signals). The downstream video transmission bandwidth is about 54-725 MHz. One advantage in using the same frequency for optical transmission of the video signal as the frequency of the video signals when received is to provide high bandwidth transmission with reduced conversion expense. This same-frequency transmission approach means that the modulation downstream requires optical to electrical conversion or proportional conversion with a photodiode and perhaps amplification, but no frequency conversion. In addition, there is no sample data bandwidth reduction and little loss of resolution.

[**0703**] Alternative embodiments of the VHDT may employ other modulation and mixing schemes or techniques to shift the video signals in frequency, and other encoding methods to transmit the information in a coded format. Such techniques and schemes for transmitting analog video data, in addition to those transmitting digital video data, are known to one skilled in the art and are contemplated in accordance with the spirit and scope of the present invention as described in the accompanying claims.

[**0704**] Telephony information is transmitted downstream by HDT **1012** via optical fiber link **1020** to a corresponding optical distribution node **1026**. A more detailed block diagram of one of the HDTs **1012** is shown in **FIG. 117**. Each HDT **1012** includes an RF modem bank **1050** which receives telephony information via trunk line **1008**. The RF modem bank **1050** includes four RF modem modules **1052** and a protection modem module **1054**. Each RF modem module receives telephony information, for example time division multiplexed channel signals from a public switched telephone service, via trunk line **1008** and the telephony information modulates an analog carrier for transmission of the downstream optical telephony data by downstream optical telephony transmitter **1080** of downstream telephony electrical to optical converter **1064** to a corresponding distribution node **1026**. Each RF modem module includes a transceiver **1053** and provides a downstream electrical telephony signal in one of four frequency bandwidths, each bandwith being about 6 MHz in width like that of a CATV channel. Each 6 MHz bandwidth channel transmits data at 22 Mbits/sec and can provide for transmission of 8T1 digital telephone signals; T1 being a conventional telephone signal 24 voice channels are sampled at an 8 kHz rate, with 8 bits per sample (each 8 bit conversation sample is termed a DS**0**). Each of these signals from the four RF modem modules **1052** are transmitted via coax patch cables to a combiner **82** of downstream telephony electrical to optical converter **1064** for transmission by optic transmitter **1080**. Therefore, the spectrum for the downstream optical telephony data is four separated 6 MHz frequency bands containing 22 Mbits/sec of data within each 6 MHz bandwidth. The four 6 MHz frequency bands, separated by a guard band as is known to one skilled in the art, are transmitted in about the 725-800 MHz bandwidth.

[**0705**] Any number of modulation techniques may be used for transmission of the telephony information downstream. The transmission downstream is point to multipoint transmission using broadcast type transmission schemes. The modulation techniques utilize and performed by RF modem module **1052** may include quadrature phase shift keying (QPSK) quadrature amplitude modulation (QAM), or other modulation techniques for providing the desired data rate. Modulation techniques, such as QPSK and QAM, are known to those skilled in the art and the present invention contemplates the use of any such modulation techniques for downstream transmission.

[**0706**] The electrical to optical converter **1064** includes two transmitters **1080** for downstream telephony transmission to protect the telephony data transmitted. These transmitters are conventional and relatively inexpensive narrow band laser transmitters. One transmitter is in standby if the other is functioning properly. Upon detection of a fault in the operating transmitter, controller **1060** switches transmission to the standby transmitter. In contrast, the transmitter of the VHDT **1014** is relatively expensive as compared to the transmitters of HDT **1012** as it is a broad band analog DFB

laser transmitter. Therefore, protection of the video information, non-essential services unlike telephony data, is left unprotected. By splitting the telephony data transmission from the video data transmission, protection for the telephony data alone can be achieved, If the video data information and the telephony data were transmitted over one optical fiber line by an expensive broad band analog laser, economies may dictate that protection for telephony services may not be possible. Therefore, separation of such transmission is of importance.

[0707] As an alternative embodiment for providing transmission of optical video and telephony signals to the optical distribution nodes **1027** from head end **1010** as shown in **FIG. 120**, the HDT **1012** and VHDT **1014** can utilize the same optical transmitter and the same optical fiber line **1016**. The signal then is split by splitter **1018** and four split signals are provided to the optical distribution nodes **1027** for distribution to the remote units **1042** by the coaxial distribution system **1007** as further discussed below. However, as described above, the optical transmitter utilized would be relatively expensive due to its broad band capabilities, lessening the probabilities of being able to afford protection for essential telephony services.

[0708] As one skilled in the art will recognize, optical link **1020**, as shown in **FIG. 117**, may include four fibers, two for transmission downstream from electrical to optical converter **1064** and two for transmission upstream to optical to electrical converter **1066**. With the use of directional couplers, the number of such fibers may be cut in half. In addition, the number of protection transmitters and fibers utilized may vary as known to one skilled in the art and any listed number is not limiting to the present invention as described in the accompanying claims.

[0709] RF modem bank **1050** includes a protection RF modem module **1054** with a transceiver **1053** connected to combine **1082** of electrical to optical converter **1064**. Protection RF modem module **1054** is further coupled to controller **1060**. When a fault is detected with regard to the transmission of one of the RF modem modules **1052**, a signal is generated and applied to an input **1062** of controller **1060**. Controller **1060** is alerted to the fault and provides appropriate signaling to switch the protection RF modem module **1054** for the faulted RF modem such that the protection RF modem module **1054** transmits within the 6 MHz bandwidth of the faulted RF modem module **1052** so that the four 6 MHz bandwidth signal transmission is continued on optical fiber link **1020**. The use of one protection RF modem module **1054** for four RF modem modules **1052** is only one embodiment of the present invention and the number of protection RF modem modules relative to RF modem modules may vary as known to one skilled in the art and described in the accompanying claims. As shown in **FIG. 123**, RF modem bank **1050** may include one protection module **1054** for each RF modem module **1052**. In this embodiment, the RF modem bank **1050** includes three RF modem modules **1052** and three protection modules **1054** for one-to-one protection.

[0710] An optical distribution node **1026** as shown in **FIG. 118** receives both the downstream optical telephony signal and the split downstream optical video signal. The downstream optical video signal is applied by the optical fiber **1022** from splitter **1018** to a downstream video receiver **1120** of optical distribution node **1026**. The optical distribution node **1026** further includes downstream telephony receiver **1121** for receiving the downstream optical telephony signal on optics link **1020**. The optical video receiver **1120** utilized is like that available in the LiteAMp™ product line available from American Lightwave Systems, Inc. The converted signal from video receiver **1120**, proportionally converted utilizing photodiodes, is applied to bridger amplifier **1127** along with the converted telephony signal from downstream telephony receiver **1121**. The bridging amplifier **1127** simultaneously applies four downstream electrical telephony and video signals to diplex filters **1134**. The diplex filter **1134** allow for full duplex operation by separating the transmit and receive functions when signals of two different frequency bandwidths are utilized for upstream and downstream transmission. There is no frequency conversion performed at the optical distribution nodes with respect to the video or downstream telephony signals as the signals are passed through the optical distribution nodes to the remote units via the coaxial distribution system in the same frequency bandwith as they are received.

[0711] After the optical distribution node **1026** has received downstream optical video signal via optical link **1022** and downstream optical telephony signals via optical link **1020** and such signal are converted to downstream electrical video and telephony signals, the four outputs of the optical distribution nodes **1026** are applied to four coaxial cables **1029** of coaxial cable distribution system **1007** for transmission of the downstream electrical video and telephony signals to the remote units **1042**; such transmission occurs in about the 725-800 MHz bandwidth for telephony signals and about the 54-725 MHz bandwidth for the downstream electrical video signals. Each optical distribution node **1026** provides for the transmission over a plurality of coaxial cables **1029** and any number of outputs is contemplated in accordance with the present invention as described in the accompanying claims.

[0712] As shown in **FIG. 116**, each coaxial cable **1029** can provide a significant number of remote units with downstream electrical video and telephony signals through a plurality of coaxial taps **1034**. Coaxial taps are commonly known to one skilled in the art and act as passive bidirectional pick-offs of electrical signals. Each coaxial cable **1029** may have a number of coaxial taps connected in series. In addition the coaxial cable distribution system may use any number of amplifiers to extend the distance data can be sent over the coaxial portions of the network **1006**.

[0713] The downstream electrical video and telephony signals are provided from the coaxial taps to the remote units **1042** in a number of different ways. In one embodiment, the signal from the coaxial tap **1034** is provided to a home integrated service unit **1070** as shown in **FIG. 119**. The home integrated service unit **1070** of **FIG. 119** includes a power tap **1099** coupled to a conventional power supply and ring generator **1101**. The downstream electrical video and telephony signals are provided to a tap **1097** for application of the signals to both diplex filter **1110** and ingress filter **1098**. The down video signal is provided from ingress filter **1098** to video equipment **1072** via set top box **1078**. The downstream telephony signal is applied from diplex filter **1110** to RF demodulator **1104** of RF modem module **1102** and the demodulated signal is applied to an applicable service interface for processing and connection to user

equipment. For example, the RF demodulated signal is processed via Plain Old Telephone Service (POTS) service interface **1112** for output on twisted pairs **1118** to telephone **1076** by POTS connection **1114**. The other service interfaces such as ISDN interface or a T1 interface perform their conventional functions as are known to those skilled in the art for transmittal of such information on outputs thereof to user equipment.

[**0714**] Ingress filter **1098** provides the remote unit **1042** with protection against interference of signals applied to the video equipment **1072** as opposed to those provided to other user equipment such as telephones or computer terminals. Filter **1098** passes the video signals; however, it blocks those frequencies not utilized by the video equipment. By blocking those frequencies not used by the video equipment, stray signals are eliminated that may interfere with the other services provided by the network to at least the same remote unit.

[**0715**] The set top box **1078** is an optional element in the network **1006**. It may include an additional modem for sending interactive data therefrom back to head end **1010** at frequencies unused by the video and telephony transmissions. Upstream transmission of such data is further discussed below.

[**0716**] Depending on the modulation processing techniques utilized at the head end **1010**, the RF demodulator **1104** would include circuitry capable of demodulating the modulated signal. For example if QPSK modulation is utilized then the demodulator would include processing circuitry capable of demodulating a QPSK modulated waveform as is known to one skilled in the art.

[**0717**] In another embodiment of providing downstream electrical video and telephony signals from the coaxial taps **1034** to remote units **1042**, as shown in **FIG. 116, a** separate coaxial line form coaxial tap **1034** is utilized to provide transmission of the signals therefrom to set top box **1078**, and thus for providing the downstream video signals to video equipment unit **1072**. In such a case, a second coaxial line from coaxial tap **1034** would be utilized to provide the downstream telephony signals to a multiple integrated service unit (MISU) **1044** which would be much like the home integrated service unit **1070** as described with regard to **FIG. 119** except lacking an ingress filter **1098** and tap **1097**. Unlike home integrated service unit **1070**, the MISU **1044** would be utilized to service several remote units **1042** with telephony services via various service interfaces. Whether the video and telephony signals are provided to the curb with use of the MISU **1044** or whether the video and telephony signals are provided directly to a home integrated service unit is strictly one of application and either can be utilized with regard to the same or different coaxial taps **1034** and within the same or different coaxial distribution systems **1007**.

[**0718**] In addition, an optional network interface device (NID) **1075** is utilized in the connection of telephone services to the remote units **1042**, whether they are homes or businesses, as is known to those skilled in the art and as shown in **FIG. 116**. The NID is generally shown by block **1070** representing the home integrated service unit but is not shown in the detail of **FIG. 119**. The NID performs service functions for the telephone service provider such as looping back signals to the service provider that reach the NID so as to indicate a failure has occurred somewhere in transmission to the NID or in connections from the NID to the user equipment when a failure is reported to the service provider.

[**0719**] The above description primarily involves the downstream transmission of video and telephony information from head end **1010** to remote units **1042**. The upstream transmission of interactive data from set top boxes **1078** and other data, for example telephony from telephones **1076**, shall now be described with reference to FIGS. **116-123**. The description shall be limited to transmission from remote units via home integrated service units as transmission from an MISU is substantially similar and easily ascertainable from such description. Home integrated service unit **1074** provides set top box information from set top box **1078** and telephony information from the service interfaces **1112**, including information from telephone **1076**, to the optical distribution mode **1026** connected thereto by the same coaxial path as for the downstream communication. The set top box signals are transmitted by a separate RF modem of the video service provider at a relatively low frequency in the bandwidth of about 5 to 40 MHz which is unused by telephony and video services. The telephony signals are also transmitted upstream in the 5-40 MHz bandwidth, usually from 10 MHz to 30 MHz. This 5-40 MHz bandwidth is reused in each coaxial path **1029** from each remote unit **1042** to the respectively connected optical distribution node **1026**. As such, upstream electrical telephony data signals from the remote units are transmitted at the same reused frequency bandwidth of 5-40 MHz on each coaxial line **1029** for input to the optical distribution node **1026**. Therefore, as shown in **FIG. 118**, four upstream electrical telephony signals, each in the 5-40 MHz bandwidth, are input to optical distribution node **1026**, via the respectively connected coaxial cables **1029**.

[**0720**] The upstream transmission from an integrated service unit for multipoint to point transmission utilizes time multiplexing techniques, although any of a number of multiple access techniques known to those skilled in the art are contemplated in accordance with the present invention. All the remote units are designated a time slot for transmission. In such a case each remote unit must transmit at a particular time to maintain multiple access with the timing being supplied using data on the downstream paths. The upstream data is transmitted on a bit-by-bit basis. With each remote unit assigned a time slot, the RF modem **1102** of the unit knows that it will not interfere with the others because it has determined the time delay for each one of them and each RF modem **1102** is signaled to transmit at a precise time. Due to the high volumes of multiplexed serial data from several outlining remote stations and limited bandwidth for transmission, short pulse durations are required for better resolution of the data transmitted to the head end **1010**. Although the data modulates a carrier and is transmitted in the 5 to 40 MHz bandwidth by RF modulator **1108**, because of the limited bandwidth in the upstream direction, a pulse shaping network at each remote unit is used to generate raised cosine pulses for the rectangular or square wave bit-by-bit stream of data transmitted along the coaxial cable in the coaxial network.

[**0721**] An optimal pulse shape for transmission in a band limited coaxial cable work is determined by the use of Fourier calculations with a given set of boundary conditions. Also, the Fourier calculations implement a spectral limita-

tion constraint for the purposes of limiting the spectral content of the optimal pulse shape. Limiting the spectral content of the pulse shape serves two functions. The first function is to limit the spectral characteristics of the optimal pulse shape in order to prevent phase dispersion at the receiving end of the transmission system. The second benefit from the spectral limitation constraint is to allow the use of relatively simple finite impulse response filters with a minimal number of taps.

[0722] In one embodiment of the pulse shaping network as shown in **FIG. 121,** 50 nanosecond pulses from the RF modulator **1108** of RF modem **1102** are transmitted to a pulse sequencer **1301** for uniform digitization. The output from the pulse sequencer is then applied to a ten tapped finite impulse response filter (FIR filter) **1302** with associated electronics **1303** to provide the addition and subtraction necessary for the filtering process. The output is sent to a line driver circuit for output to the coaxial cable through diplex filter **1110**. The optimal pulse waveform is a raised cosine waveform. Using such pulse shaping techniques, overcomes the difficulty of sending extremely short pulse duration information along a band limited coaxial cable.

[0723] The upstream electrical telephony signals from a plurality of remote units, including signals from the RF modems **1102** and from modems in set top boxes **1078**, are transmitted to the respectively connected optical distribution node **1026** as shown in **FIG. 118** via the individual coaxial cables **1029**. The upstream electrical signals are applied to a diplex filter **1134** respectively connected to a coaxial cable **1029**. One of the diplex filter **1134** passes the upstream electrical telephony signal applied thereto through to combiner **1125** while the other diplex filters pass the upstream electrical telephony signals applied thereto to frequency shifters **1128, 1130,** and **1132**. Frequency shifter **1128** shifts the electrical telephony signal into the 50-85 MHz bandwidth, frequency shifter **1130** shifts another upstream electrical telephony signal into the 100-135 MHz bandwidth and frequency shifter **1132** shifts the other upstream electrical telephony signal into the 150-185 MHz bandwidth. The shifted signals are combined by combiner **1125** and provided to upstream telephony and set top control transmitters **1123**. The conventional optical transmitters **1123** transmit the upstream electrical telephony signal as an upstream optical telephony signal to head end **1010** via fiber optic link **1020**. Once again, two transmitters are available for transmission, one in standby mode, like that in the downstream transmission path.

[0724] The upstream optical telephony signals are received by upstream telephony and set top box receiver **1084** of optical to electrical converter block **1066**. The upstream optical telephony signals are converted, split, and all the split electrical signals in the 5-40 MHz, 50-85 MHz, 100-135 MHz, and 150-185 MHz are frequency shifted back to the 5-40 MHz bandwith by frequency shifters **1086, 1088,** and **1090** with the exception of the signal in the 5-40 MHz bandwidth which is passed through with the other frequency shifted signals from the frequency shifters to RF switch **1094**. A combined signal in the 5-4 MHz bandwidth from combiner **1092** is provided to the VHDT and the signal is processed for obtaining the interactive information transmitted from set top boxes **1078**. The RF switch **1094** is controlled by controller **1060** and provides the upstream telephony signals to the transceivers **1053** of the corresponding RF modems **1052**. The upstream telephony signals are then demodulated by RF modem modules **1052** and the telephony data is provided to the service providers via trunk line **1008**. The RF modem modules **1052** include RF demodulator corresponding to the modulation techniques utilized to transmit the information upstream so such information can be recovered.

[0725] As discussed previously, the controller **1060** switches protection RF modem module **1054** for a transmitting RF modem module **1052** in the downstream communication when a fault is detected in that module. The controller also provides signaling for switching the RF switch **1094** such that the information which would have been provided to the faulted RF modem module **1052** is applied to the transceiver of the protection RF modem module **1054**. Therefore, the protection modem module **1054** is then fully within the transmit and receive loop of the system.

[0726] As shown in **FIG. 122** an alternative embodiment of the present invention includes an optical to electrical converter **1066** wherein the received optical upstream telephony signal is converted by receivers **1084** and the entire upstream electrical signal in the 5-200 MHz bandwidths is applied to the transceivers **1053** of the RF modem modules **1052**. The RF modem modules **1052** are then operated under control of controller **1060** which assigns the RF modem module a carrier frequency to tune to for the recovery of telephony information; the assigned frequency being a function of the frequency shifting of the upstream signal. The electrical signal is still separated and frequency shifted by frequency shifters **1086, 1088** and **1090** except for the signal already in the 5-40 MHz bandwith and then combined by combiner **1092** for application to VHDT **1014**.

[0727] In this embodiment, the switching of the protection modem module **1054** into the system is accomplished through the controller **1060**. When the controller **1060** detects and indicates a faulted modem module **1052**, the controller **1060** assigns the frequency previously assigned to the faulted RF modem module to the protection module, thus establishing the protection RF modem module **1054** fully within the transmit and receive loop.

[0728] In another embodiment shown in **FIG. 123** including one-to-one protection for the RF modem module, neither the RF switch used for protection switching for the configuration of **FIG. 123** nor the additional control required for protection switching for the configuration of **FIG. 122** is necessary. In this embodiment the same electrical signal provided to the RF modem modules **1052** is applied to be corresponding protection module **1054**, thus only a control signal indicating which module is to be used for transmission or reception is required for the one-to-one protections.

[0729] It is to be understood, however, that even though numerous characteristics of the present invention have been set forth in the foregoing description, together with details of the structure and function of the invention, the disclosure is illustrative and changes in matters of shape, size, number, and arrangement of the elements may be made within the principles of the invention and to the full extent indicated by the broad general meaning of the terms in which the appending claims are expressed.

What is claimed is:

1. A service unit for a telecommunications network that communicates computer data over a distribution network using orthogonal carriers, the service unit comprising:

a multicarrier modem having a port that is adapted to be coupled to the distribution network; and

a bridge/router, including:

interface logic, coupled to the multicarrier modem, that is adapted to receive a data dial tone from the multicarrier modem indicating that at least one data channel has been established as a data path for communicating data to the head end and that is adapted to control the placement of data in the at least one data channel;

a data link controller, coupled to the interface logic, that encodes/decodes data;

a local area network controller, coupled to the data link controller; and

a local area network port coupled to the local area network controller.

2. The service unit of claim 1, wherein the interface logic uses added bit signaling to identify the order of data channels used for the data path.

3. The service unit of claim 1, wherein the data link controller comprises an HDLC controller.

4. The service unit of claim 1, wherein the local area network controller comprises an Ethernet controller.

5. The service unit of claim 1, and further including a router coupled between the local area network controller and the local area network port.

6. A service unit for a telecommunications network that communicates computer data over a distribution network using orthogonal carriers, the service unit comprising:

a multicarrier modem having a port that is adapted to be coupled to the distribution network; and

a bridge/router, including:

interface logic, coupled to the multicarrier modem, that is adapted to receive a data dial tone from the multicarrier modem indicating that at least one data channel has been established as a data path for communicating data to the head end and that is adapted to control the placement of data in the at least one data channel;

a local area network controller, communicatively coupled to the data link controller; and

a local area network port coupled to the local area network controller.

7. The service unit of claim 6, wherein the interface logic uses added bit signaling to identify the order of data channels used for the data path.

8. The service unit of claim 6, and further including a router coupled between the local area network controller and the local area network port.

* * * * *