United States Patent

[11] 3,593,617

[72] Inventor **Philip Butterworth**
Bramhall, England

[21] Appl. No. **794,745**
[22] Filed **Jan. 28, 1969**
[45] Patented **July 20, 1971**
[73] Assignee **Butterworth Hydraulic Developments Limited**
[32] Priority **Feb. 12, 1968**
[33] **Great Britain**
[31] **6,797/68**

[54] **FLUID PRESSURE OPERATED MOTORS**
15 Claims, 5 Drawing Figs.

[52] **U.S. Cl.** **91/239,**
91/240, 91/243, 91/263, 91/309, 91/408
[51] **Int. Cl.** **F01l 25/06**
[50] **Field of Search** 91/357,
278, 239, 240, 243, 267, 309

[56] **References Cited**

UNITED STATES PATENTS

1,484,030	2/1924	Kitchen	91/357
1,841,629	1/1932	Pigealet	91/357
2,325,138	7/1943	Kyle et al.	91/278

FOREIGN PATENTS

374,080	5/1932	Great Britain	91/278

Primary Examiner—Paul E. Maslousky
Attorney—Stevens, Davis, Miller and Mosher

ABSTRACT: This invention relates to fluid pressure operated motors and in particular to such motors of the type in which a piston is mounted to exhibit axial movement in a piston cylinder and in which movement of the piston is controlled by the exhaust of liquid pressure or gas pressure from a chamber associated therewith.

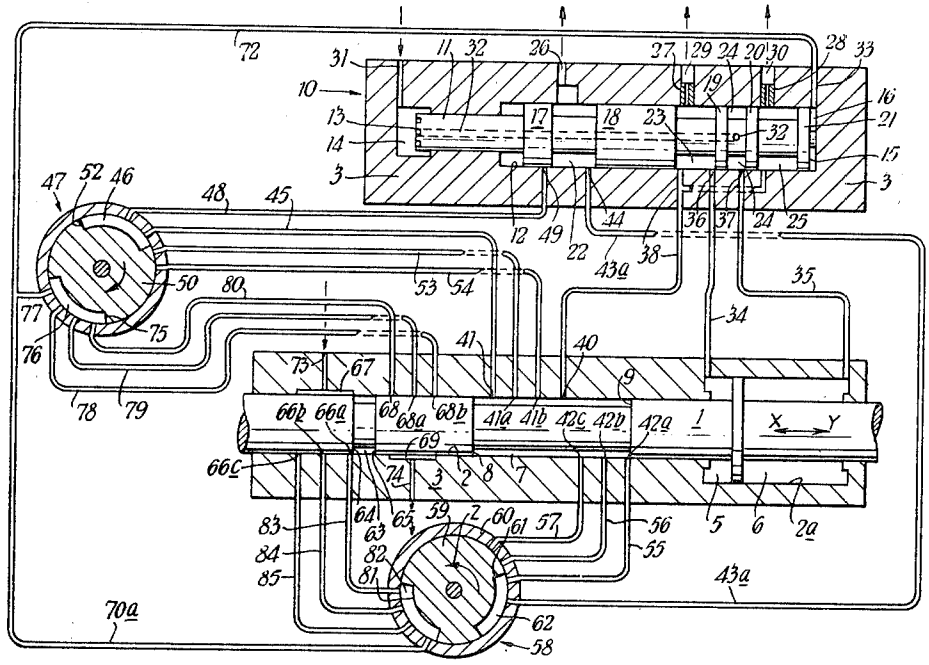

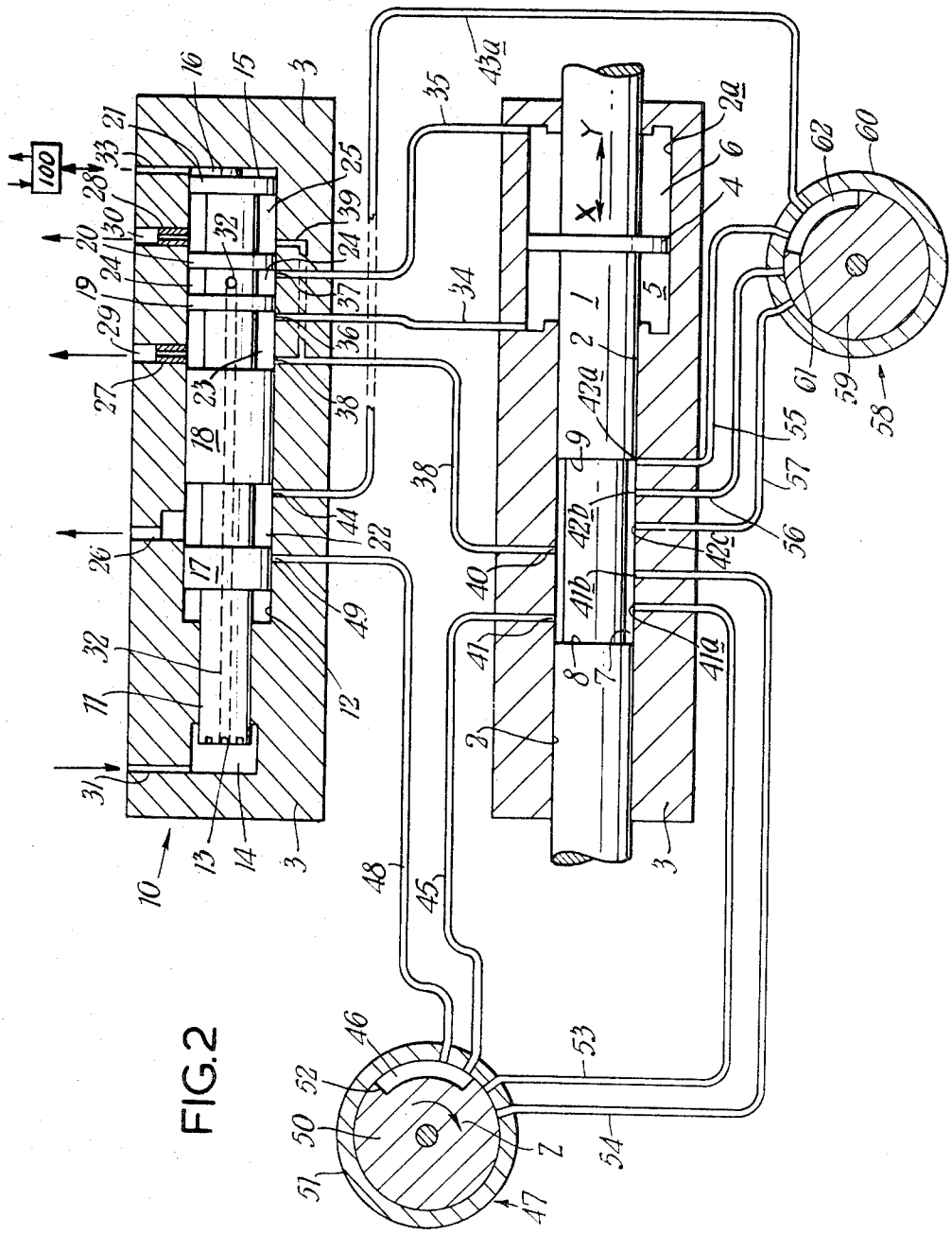

FIG.2

FIG.3

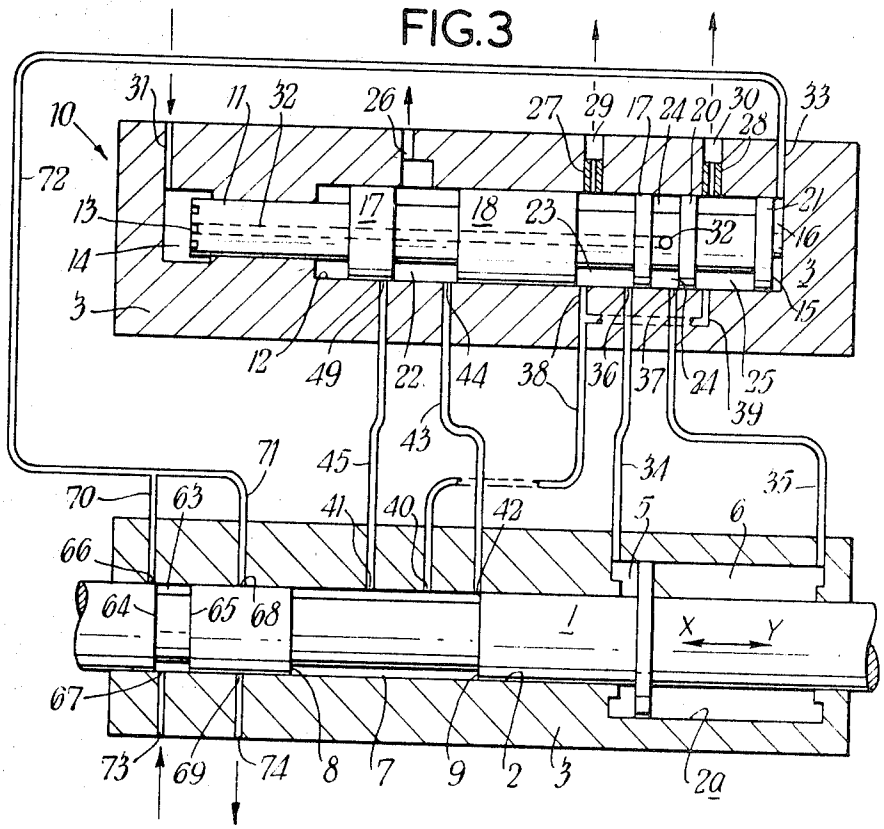
10
72
13
14
3
31
11
32
26
27
29
17
24
20
30
28
33
21
16
3
15
17
18
23
32
12
49
22
44
38
36
37
24
25
39
43
71
45
70
63
41
40
42
34
5
6
35
66
64
65
68
1
X
Y
67
73
69
74
8
7
9
2
3
2a

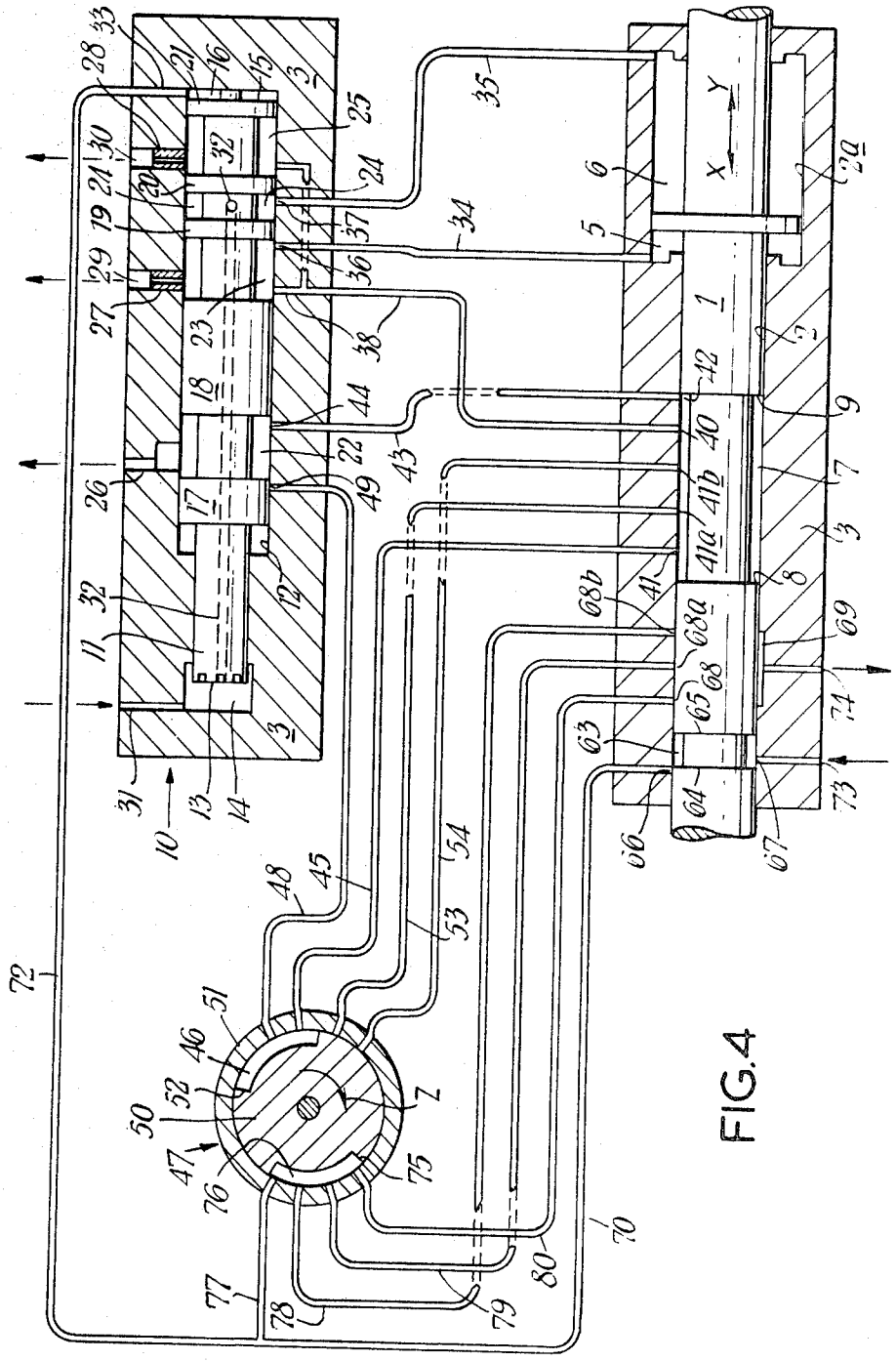

FIG.4

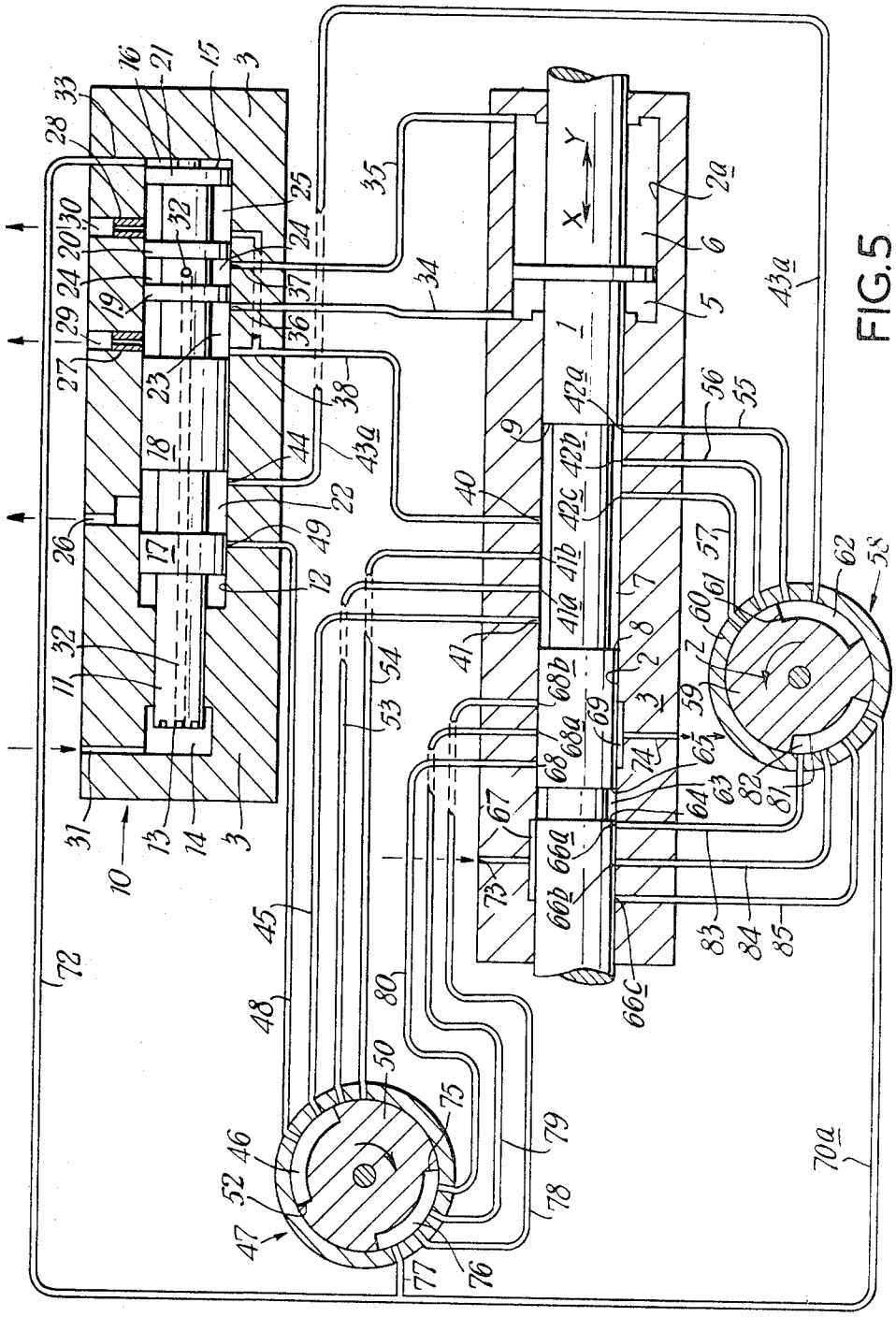
Y
X
1
2
2a
3
5
6
7
8
9
10
11
12
13
14
15
16
17
18
19
20
21
22
23
24
25
26
27
28
29
30
31
32
33
34
35
36
37
38
40
41
41a
41b
42a
42b
42c
43a
44
45
46
47
48
49
50
52
53
54
55
56
57
58
59
60
61
62
63
64
65
66a
66b
66c
67
68
68a
68b
69
70a
72
73
74
75
76
77
78
79
80
81
82
83
84
85

FIG.5

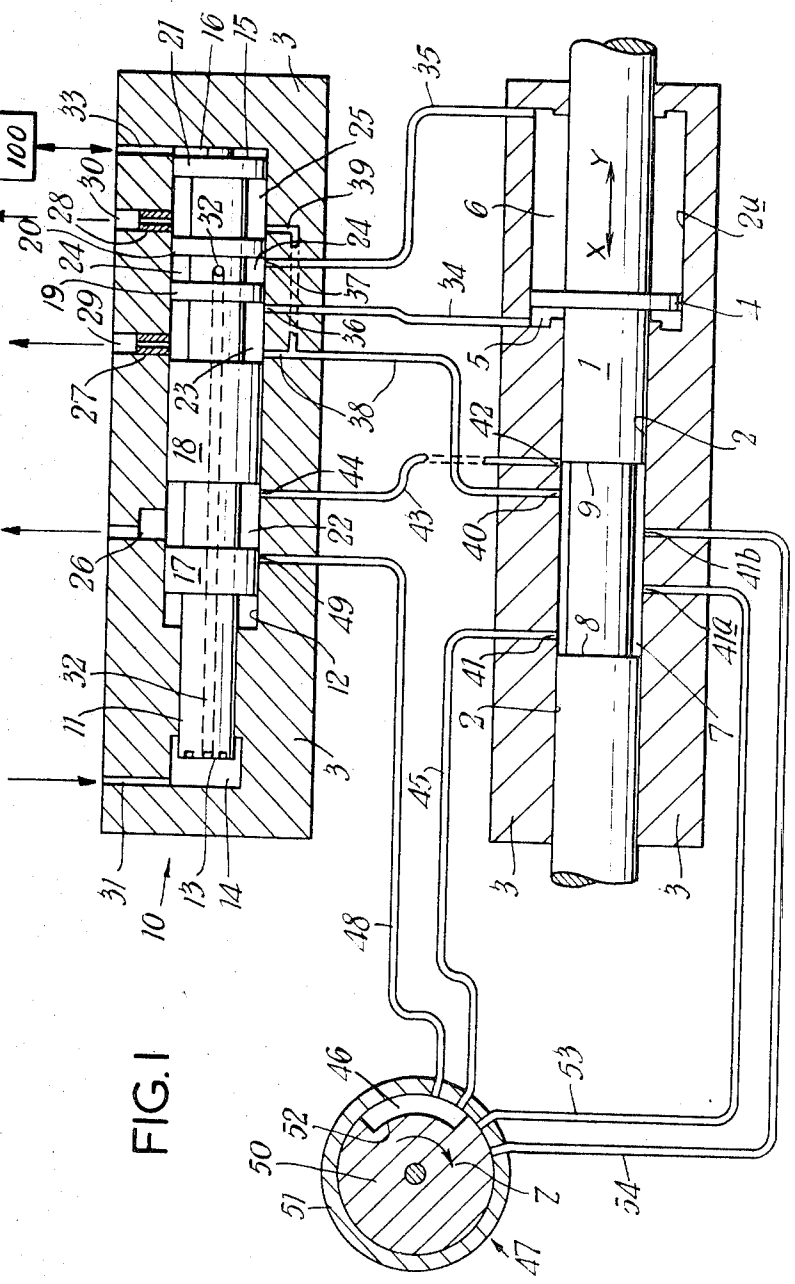

FIG. 1

FLUID PRESSURE OPERATED MOTORS

A fluid pressure operated motor which includes a piston slidably mounted for axial movement in a piston cylinder and in which axial movement of the piston is adapted to be permitted by the exhaust of fluid from a pressure chamber associated therewith which is caused to contract in volume during axial movement of the piston; wherein the pressure chamber communicates with a control port in the piston cylinder through which control port fluid from the contracting pressure chamber can exhaust, said control port being controlled by a land of the piston whereby, during axial movement of the piston in a sense to contract the pressure chamber, fluid from the contracting pressure chamber exhausts through the control port until said port is closed by the land of the piston to form a blockage to exhaust of fluid from the pressure chamber and to arrest the piston at the end of its stroke.

Preferably a plurality of ports are provided in the piston cylinder which are arranged in an axially disposed array and port selection means is provided by which one or more of the ports can be selected as the control port to communicate with exhaust. The array of ports are controlled by the piston land so that the end of stroke of the piston is determined when the selected port or ports are closed by the piston land. By selecting one or more of the axially disposed ports, the effective position of the control port in the piston cylinder can be axially varied and hence the position at which movement of the piston is arrested by the closure of the control port or ports and consequent formation of the blockage is also varied (i.e. a the end of the piston stroke can be adjusted).

In a preferred form of construction of the motor the piston is adapted to exhibit reciprocal movement in its cylinder and two pressure chambers are provided. One pressure chamber is adapted to alternately contract and expand and the other pressure chamber is adapted simultaneously to alternately expand and contract respectively during reciprocation of the piston. Piston land means on the piston is adapted to control the opening and closing of two axially spaced control ports in the the piston cylinder. A first pressure chamber, during its contraction by movement of the piston in one sense of axial direction, is adapted to exhaust through a first control port controlled by the piston land means and the end of stroke of the piston in the one sense of axial direction is determined by the first control port being closed by the piston land means. The second pressure chamber, during its contraction by movement of the piston in the opposite sense of axial direction is adapted to exhaust through the second control port controlled by the piston land means and the end of stroke of the the piston in the opposite sense of axial direction is determined by the second control port being closed by the piston land means. By such a construction the piston is arrested at each end of its stroke as the control port through which the contracting pressure chamber exhausts is closed by the piston land means. Conveniently the piston has two axially spaced lands which, together with the piston cylinder, define an exhaust chamber which is adapted to communicate with the contracting pressure chamber during axial movement of the piston. Preferably the contracting pressure chamber is adapted to communicate wit the exhaust chamber by way of an input port in the piston cylinder which is in permanent communication with the exhaust chamber and is located axially between the two control ports. The first of the control ports is controlled by a first piston land so that it is alternately opened and closed to communication with the exhaust chamber and the second of the control ports is controlled by the second piston land so that it is alternately opened and closed to communication with the exhaust chamber. The control ports and piston lands are arranged so that at least one or other of the control ports is always open to communication with the exhaust chamber during reciprocation of the piston. The first pressure chamber when contracting is adapted to exhaust by way of the exhaust chamber and the first control port so that the end of stroke of the piston in the first sense of axial direction is determined when the first control port is closed by the first piston land. The second pressure chamber, when contracting is adapted to exhaust by way of the exhaust chamber and the second control port so that the end of stroke of the piston in tne opposite sense of axial direction is determined when the second control port is closed by the second piston land. Valve means is provided which, in a first operative condition consistent with the piston moving in the one sense of axial direction closes communication between the second control port and exhaust and opens communication between the first control port and exhaust, and in a second operative condition consistent with the piston moving in the opposite sense of axial direction closes communication between said first control port and exhaust opens communication between said second control port and exhaust.

The fluid pressure operated motor of the present invention in which the piston is adapted to exhibit reciprocal movement can be of the type which is known in the art as a "double acting device." To provide such a device one pressure chamber can be alternately connected to fluid pressure and exhaust and the other pressure chamber simultaneously and alternately connected to exhaust and fluid pressure respectively. To achieve this end the motor can include further valve means having a first operative condition in which the second pressure chamber is adapted to communicate with fluid pressure and the first pressure chamber is adapted to communicate with exhaust by way of the first control port and a second operative condition in which the first pressure chamber is adapted to communicate with fluid pressure and the second pressure chamber is adapted to communicate with exhaust by way of the second control port. The piston is caused to reciprocate in its cylinder by adjustment of the further valve means from its first operative condition to its second operative condition and vice versa. In the double acting motor as above described the valve means and further valve means are preferably coupled together for simultaneous adjustment from their respective first operative conditions to their respective second operative conditions and vice versa; and conveniently the valve means and further valve means are incorporated in a spool valve in which the spool, at one end of its stroke, adjusts the spool valve to provide the above mentioned first operative conditions and the spool at the other end of its stroke adjusts the spool valve to provide the above-mentioned second operative conditions.

It will be apparent that, in the double acting device, to obtain continuous reciprocation of the piston it is necessary for the valve means and further valve means to be adjusted alternately and simultaneously between their first and second operative conditions. Preferably the valve means and further valve means are operatively controlled by the position of the piston in its cylinder so that with the piston at or towards the end of its stroke in the one sense of axial direction the valve means and further valve means are simultaneously adjusted from their first operative conditions to their second operative conditions and with the piston at or towards the end of its stroke in the opposite sense of axial direction the valve means and further valve means are simultaneously adjusted from their second operative conditions to their first operative conditions. To achieve such an effect the spool valve can be fluid pressure operated so that the spool is reversed by alternately connecting one or more spool chambers in the spool valve to fluid pressure and exhaust, for example, as in a pressure biased spool valve or a double acting spool valve, and conveniently the communication of fluid pressure and exhaust to the spool chamber or chambers is controlled by changeover valve means operatively coupled to the piston so that at each end of stroke of the piston, the changeover valve means reverses to reverse the spool from one end of its stroke to the other (and vice versa) to cause a reversal in the direction of movement of the piston.

Although the motor of the present invention can provide a reciprocating piston with a nonadjustable, fixed length stroke,

in a further construction of the motor in accordance with the present invention in which a reciprocating piston and two pressure chambers are provided, one or both ends of stroke of the piston can be axially adjustable relative to the piston cylinder so that the axial length of stroke of the piston and/or the effective position about which the piston reciprocates can be adjusted by predetermined axial distances. In a construction of the motor in which the end of stroke of the piston in the opposite sense of direction is determined, by the fixed location of the second control port, an axially disposed array of ports can be provided in the piston cylinder and port selection means associated therewith by which at least one port in the array can be selected as the first control port for communication with exhaust and the end of stroke of the piston in the one sense of axial direction is determined when the selected port or ports of the array is closed by the piston land means. It may be desirable for both ends of stroke of the piston to be axially adjustable in which case a second axially disposed array of ports can be provided in the piston cylinder and second port selection means associated therewith by which at least one port in the second array can be selected as the second control port for communication with exhaust and the end of stroke of the piston in the opposite sense of axial direction is determined when the selected port or ports of the second array is closed by the piston land means.

Conveniently, particularly when the motor is to be applied in machine tool applications, only one of the two control ports need be capable of being varied in an axial position. Such a construction is of considerable value in machine tool applications since a cutting tool, for example a gear cutter, is often carried on the piston for reciprocal movement and it is frequently desirable to have a fixed nonadjustable position to which the cutter always moves at one end of stroke of the piston and a predetermined but adjustable position to which the cutter always moves at the other end of stroke of the piston.

In the motor in which provision is made for axial adjustment of one adjustable both ends of stroke of the piston, it is necessary for the timing of the adjustment of the valve means and further valve means from their first to their second operative conditions and vice versa to be maintained in phase with the selected end or ends of stroke of the piston and preferably reversal timing adjustment means is operatively associated with said valve means and further valve means whereby when an adjustment is made in the axial position of one or both ends of stroke of the piston an automatic adjustment is made to maintain the timing of adjustment of the valve means and further valve means between their operative conditions in phase with the selected end or ends of stroke of the piston. When the end of stroke of the piston in the one sense of axial direction is axially adjustable, reversal timing adjustment means can be coupled for simultaneous adjustment with the port selection means by which the first control port is selected. The arrangement of the reversal timing adjustment means is such that an adjustment in the axial position at which the end of stroke of the piston is determined in the one sense of axial direction by the port selection means simultaneously effects an adjustment of the timing at which the valve means and further valve means are adjusted from their first operative conditions to their second operative conditions so that reversal of the valve means and further valve means remains in phase with the end of stroke of the piston in the one sense of axial direction. Further, when the ends of stroke of the piston in both senses of axial direction are axially adjustable, second reversal timing adjustment means can be operatively associated with the valve means and further valve means. The second reversal timing adjustment means is coupled for simultaneous adjustment with the second port selection means and the arrangement of the second reversal timing adjustment means is such that an adjustment in the axial position at which the end of stroke of the piston is determined in the opposite sense of axial direction by the second port selection means simultaneously effects in an adjustment of the timing at which the valve means and further valve means are adjusted from their second operative conditions to their first operative conditions so that reversal of the valve means and further valve means remains in phase with the end of stroke of the piston in the opposite sense of axial direction.

It will be apparent that the arrest of the piston at the end or ends of its stroke can be very severe, particularly if the piston is, or carries, a heavy load. If required a fluid resistance, as for example a restrictor, jet or the like, can be incorporated in the motor so that the or a pressure chamber when contracting is adapted to communicate with exhaust by way of the fluid resistance. By such an arrangement, when the control port through which the contracting pressure chamber exhausts is closed by the piston land means, the pressure chamber maintains communication with exhaust by way of the fluid resistance to cushion the end of stroke of the piston. In the construction of the motor having a reciprocating piston in which the pressure chambers are utilized to provide a double acting device it is preferred that each pressure chamber, when contracting, communicates with exhaust by way of a fluid resistance and the further valve means is arranged so that, in its first operative condition, it makes communication between the first pressure chamber and exhaust by way of a fluid resistance and, in its second operative condition, it makes communication between the second pressure chamber and exhaust by way of a further fluid resistance, thereby cushioning both ends of stroke of the piston.

One embodiment of the present invention will now be described, by way of example only, with reference to the accompanying diagrammatic drawings in which:

FIG. 1 shows an axial section through a hydraulic fluid pressure operated motor constructed in accordance with the present invention in which reciprocation of the piston is controlled by a spool valve and the position of the end of stroke of the piston in one axial direction can be adjusted axially relative to the piston cylinder;

FIG. 2 illustrates a modification of the motor shown in FIG. 1 in which the positions of both ends of stroke of the piston are adjustable axially relative to the piston cylinder;

FIG. 3 illustrates a further modification of the motor shown in FIG. 1 in which the piston has a fixed length stroke and reversal of the spool at the ends of stroke of the piston is controlled by valve means incorporated in the piston and cylinder;

FIG. 4 illustrates a still further modification of the motor shown in FIG. 1 in which an end of stroke of the piston is adjustable axially and means is provided by which reversal of the spool is adapted to be effected at the ends of stroke of the piston so that reversal of both the spool and piston is maintained in phase; and

FIG. 5 illustrates a modification of the motor shown in FIG. 2 in which both ends of stroke of the piston are adjustable axially and means is provided by which reversal of the spool is adapted to be effected at the ends of stroke of the piston so that reversal of both the spool and piston is maintained in phase.

Where possible throughout the following description, the same parts or members in each of the Figures have been accorded the same references.

The motor illustrated comprises a piston 1 which is slidably located for movement in an axial direction in a piston cylinder 2 defined by a housing 3. The piston 1 extends, at each end, from the housing in sealed manner and the piston cylinder 2 is provided with a stepped bore in the larger diameter bore part 2*a* of which is slidably located a flange 4 integrally formed with the piston. One side face of the flange 4 and the adjacent end part of the larger bore cylinder part 2*a* together define a pressure chamber 5 and the other side face of the flange 4 and the adjacent end part of the larger bore cylinder part 2*a* together define a further pressure chamber 6. It will be apparent that if the pressure chamber 5 is pressurized whilst the chamber 6 is exhausted the piston 1 will move in an axial direction rightwardly in the drawing and if the chamber 6 is pressurized whilst the chamber 5 is exhausted the piston will

move in an axial direction leftwardly in the drawing so that the mechanism acts, in effect, as a double acting piston and cylinder device. The piston 1 is provided with an annular recess which defines an exhaust chamber 7 with the piston cylinder 2, the axial length of the exhaust chamber 7 being defined by a pair of axially spaced piston lands 8 and 9.

The motor further includes a spool valve shown generally at 10 in which a stepped spool 11 is slidably located for movement in an axial direction in a spool cylinder 12 having a stepped bore which is conveniently defined by the housing 3. The spool 11 is located in its cylinder so that the smaller diameter of the spool is located in the smaller bore of the spool cylinder and the larger diameter of the spool is located in the larger bore of the spool cylinder. The smaller diameter end 13 of the spool defines with one end part of the spool cylinder 12 a constant pressure spool chamber 14 and the larger diameter end 15 of the spool defines with the other end part of the spool cylinder 12 an alternating pressure spool chamber 16. The spool is provided with five lands 17 to 21 which define with the spool cylinder an array of axially spaced annular transfer chambers 22 to 25. The transfer chamber 22 is connected through a passage 26 in the housing 3 to be in permanent communication with exhaust and the transfer chambers 23 and 25 are each in permanent communication with exhaust through hydraulic restrictors 27 and 28 respectively located in passages 29 and 30 in the housing 3. The constant pressure spool chamber 14 is adapted to be connected to a source of hydraulic fluid under constant pressure by way of a passage 31 and the transfer chamber 24 communicates with the constant pressure spool chamber 14 by way of an internal passage 32 provided through the spool so that the transfer chamber 24 is always under pressure with the chamber 14. The alternating pressure spool chamber 16 is adapted to be alternately connected, through passage 33 and means shown generally at 100, between a source of hydraulic fluid under constant pressure and exhaust so that, with chamber 14 under pressure, when the chamber 16 is connected to exhaust the spool 11 moves axially in the direction of its bias, i.e. rightwardly in the drawing, and when the alternately pressure chamber 16 is connected to the source of hydraulic fluid under pressure the spool 11 moves axially in the direction against its bias, i.e. leftwardly in the drawing. It will be apparent that by alternating the chamber 16 between fluid under pressure and exhaust the spool 11 can be reciprocated intermittently or continuously.

The pressure chambers 5 and 6 communicate with the spool cylinder 12 through passages 34 and 35 respectively and open into the spool cylinder 12 through axially spaced ports 36 and 37 respectively. The ports 36 and 37 are located so that at the end of the stroke of the spool 11 in the direction of its bias the port 36 communicates with transfer chambers 23 and port 37 communicates with transfer chamber 24 (as illustrated). The ports 36 and 37 are respectively controlled by the lands 19 and 20 of the spool so that when the spool is moved to the opposite end of its stroke in the direction against its bias the land 19 closes port 36 and reopens it to the transfer chamber 24 and simultaneously the land 20 closes port 37 and reopens it to the transfer chamber 25. The transfer chambers 23 and 25 are connected through passages 38 and 39 to be in permanent communication with the piston cylinder 2. As illustrated, the passage 39 is conveniently a branch of the passage 38. The passage 38 opens into the piston cylinder 2 by way of an input port 40 which is located to be in permanent communication with the exhaust chamber 7.

Located in the piston cylinder 2 are control ports 41 and 42 (see FIG. 1) which are axially spaced from the port 40 and are axially disposed one on each side of the port 40. The control port 42 is controlled by the piston land 9 during reciprocation of the piston so that it is either closed by the land 9 or opens into the exhaust chamber 7. Similarly the control port 41 is controlled by the piston land 8 during reciprocation of the piston so that it is either closed by the land 8 or opens into the exhaust chamber 7.

The control port 42 communicates with the spool cylinder 12 by way of a passage 43 and opens into the spool cylinder through a port 44. The port 44 is located so that with the spool at the end of its stroke in the direction of its bias, the port communicates with the transfer chamber 22 (as illustrated). The port 44 is controlled by the spool land 18 so that as the spool moves towards and is located at the end of its stroke in the direction against its bias the port 44 is closed by the land 18. The control port 41 communicates through a passage 45 with a chamber 46 in port selection means shown generally at 47. The chamber 46 is adapted to be in permanent communication with a passage 48 which communicates with the spool cylinder 12 ad opens into the spool cylinder by way of a port 49. The port 49 is located so that with the spool 11 at the end of its stroke in the direction against its bias the port opens into the transfer chamber 22. The port 49 is controlled by the spool land 17 so that when the spool is moved towards and is located at the end of its stroke in the direction of its bias the port 49 is closed by the land 17 (as illustrated). The ports 44 and 49 are axially spaced relative to the axial spacing of the lands 17 and 18 so that both ports 44 and 49 do not simultaneously communicate with the transfer chamber 22.

The port selection means 47 conveniently comprises a cylindrical member 50 which is capable of adjustable axial rotation within a sleeve 51. The member 50 is provided in its surface with a part annular recess 52 which recess, together with the inner cylindrical wall of the sleeve 51, defines the chamber 46. A plurality (in this case four) of passages 45, 48, 53 and 54 pass through the sleeve member to the cylinder member 50 and communicate therewith in a peripherally spaced array so that by rotation of the cylinder member 50 the passage 48 can communicate, through the chamber 46, solely with the passage 45, or with both the passages 45 and 53, or with all the passages 45, 53, and 54. Alternative constructions for the port selection means 47 can be used, as for example an adjustable spool valve.

The control ports 41 and 42 are axially spaced relative to the piston lands 8 and 9 so that when one control port is closed by its associated land to communication with the exhaust chamber 7 the other control port is always in communication with the exhaust chamber 7. Further, assuming that only one of the control ports 41 and 42 communicates with the exhaust chamber 7, the control port which is open to chamber 7 is also adapted to communicate with exhaust by way of the transfer chamber 22 and passage 26 by suitable positioning of the spool 11 and the spool 11 is adapted to control the flow of fluid under pressure and exhaust from the pressure chambers 5 and 6 so that the piston moves axially in a direction in which the control port which is open to the exhaust chamber 7 is subsequently closed by its associated piston land whilst that piston land is moving in a direction towards the port 40.

We will now consider operation of the motor above described with reference to FIG. 1. A source of hydraulic fluid under constant pressure is connected to the passage 31 and the passages 26, 29, 30 and 33 are connected to exhaust. The spool 11 moves axially in the direction of its bias until it abuts the housing 3 at the end of its stroke (as illustrated). Hydraulic fluid under pressure passes through the passage 32, transfer chamber 24 and passage 35 into the pressure chamber 6. The pressure chamber 5 is simultaneously connected to exhaust by way of passage 34, transfer chamber 23, passage 38, exhaust chamber 7, control port 42, passage 43, transfer chamber 22 and passage 26. Consequently the piston 1 is moved axially in the direction of arrow X. The control port 41 is effectively closed to exhaust since the port 49 in the spool cylinder 12 is closed by the land 17. The piston 1 continues to move until the land 9 thereof closes the port 42 to communication with the exhaust chamber 7 which consequently shuts off communication between the pressure chamber 5 and exhaust. A blockage is thereby formed to the exhaust of fluid from the pressure chamber 5 to arrest movement of the piston 1 in the direction X irrespective of hydraulic fluid pressure in the pressure chamber 6. It will be apparent that the arresting of the piston

can be severe and the arresting is conveniently cushioned by the hydraulic restrictor 27 which communicates with the transfer chamber 23. Hydraulic pressure builds up in the pressure chamber 5 when the control port 42 closes and such pressure is fractionally relieved through the restrictor 27 to cushion the arrest of the piston.

For practical purposes, neglecting loss of fluid through the restrictor 27, the end of stroke of the piston 1 subsequent to movement of the piston in the direction X is the position at which the land 9 closes the control port 42; the piston therefore remains at the end of its stroke until the pressure chambers 5 and 6 are connected to fluid under pressure and exhaust in a sense to move the piston axially in the direction Y. This is achieved by axial movement of the spool 11 to the end of its stroke in the direction against its bias.

The passage 33 is connected to the source of hydraulic fluid under constant pressure and hydraulic pressure in the alternating pressure spool chamber 16 moves the spool axially against its bias. In such movement of the spool the spool land 17 opens the port 49 to the transfer chamber 22, the spool land 18 closes the port 44, the spool land 19 closes the port 36 and reopens it to communication with the transfer chamber 24 and the spool land 20 closes the port 37 and reopens it to communication with the transfer chamber 25. Hydraulic fluid under pressure can now pass from the transfer chamber 24 by way of port 36 and passage 34 into the pressure chamber 5 whilst the pressure chamber 6 communicates by way of passage 35, port 37, transfer chamber 25, passages 39 and 38, exhaust chamber 7, control port 41, passage 45, chamber 46, passage 48, port 49, transfer chamber 22 and passage 26 to exhaust. Consequently the piston 1 is caused to move axially in the direction of arrow Y. The port 42 and passage 43 remain ineffective since the port 44 is closed to exhaust by the spool land 18.

The piston 1 continues to move in the direction of arrow Y until the piston land 8 eventually shuts off communication between the control port 41 and the exhaust chamber 7 which consequently shuts off communication between the pressure chamber 6 and exhaust and forms a blockage to the exhaust of fluid from the pressure chamber 6 to arrest the piston irrespective of hydraulic fluid pressure in the pressure chamber 5. In a similar manner to movement of the piston 1 in the direction X, the arresting of movement of the piston is conveniently cushioned by the pressure chamber 6 communicating with exhaust through the hydraulic restrictor 28 and passage 30. For practical purposes, assuming negligible fluid loss through the restrictor 28, it will be apparent that the end of stroke of the piston 1 subsequent to its movement in the direction Y, corresponds to the position when the control port 41 is shut off from communication to exhaust chamber 7 by the piston land 8.

It is frequently desirable to adjust the axial length of stroke of the piston 1 and this is conveniently achieved by providing means whereby the position of the control port 41 can be selected from an axially disposed array of ports. In the present example, the passages 53 and 54 from the port selection means 47 communicate with the piston cylinder 2 and open into the piston cylinder by way of ports 41*a* and 41*b* respectively. The array of ports 41, 41*a* and 41*b* are located on the side of the port 40 axially remote from the control port 42. As aforementioned the end of stroke of the piston 1 subsequent to movement in the direction Y occurs when the port through which the exhaust chamber 7 communicates with exhaust is closed to exhaust by the piston land 8. By rotating the cylinder member 50 in the direction or arrow Z the exhaust chamber 7 can be further connected to exhaust by way of the passages 45 and 53, or the passages 45, 53 and 54 as required. It will be apparent that the shortest length of stroke of the piston 1 is obtained when the passages 53 and 54 are closed by the cylinder member 50 and the longest stroke is obtained when the passages 48 and 54 are in communication.

In the embodiment shown in FIG. 1 the axial length of stroke of the piston 1 is adjustable by provision of the array of ports 41, 41*a*, and 41*b* and the port selection means 47. It will be apparent that the position of the end of stroke in the direction Y of the piston relative to the piston cylinder 2 can be adjusted axially by connecting the passage 48 with one or more of the ports 41, 41*a* and 41*b* through the port selection means 47 whereas the position of the end of stroke in the direction X of the piston relative to the piston cylinder is fixed and is determined by the piston land 9 closing control port 42. It may be desirable to provide a motor in which the positions of both ends of stroke of the piston are independently adjustable axially relative to the piston cylinder and such a construction will now be considered with reference to FIG. 2 which illustrates a modification of the motor shown in FIG. 1.

In FIG. 2 the axial position of the control port 42 (as referred to with reference to FIG. 1) is effectively selected from an axially disposed array of ports all of which are located in the piston cylinder on the side of the port 40 axially remote from the array of ports 41, 41*a* and 41*b*. In the present example the control port 42 is effectively selected from three ports 42*a*, 42*b* and 42*c*. The ports 42*a*, 42*b* and 42*c* communicate by way of passages 55 to 57 respectively with port selection means shown generally at 58. The port selection means 58 is similarly constructed to that shown at 47 and comprises a cylindrical member 59 which is capable of adjustable axial rotation within a sleeve 60. The member 59 is provided in its surface with a part annular recess 61, which, together with the inner cylindrical wall of the sleeve 60, defines a chamber 62.

The port 44 in the spool cylinder 12 communicates by way of passage 43*a* with the port selection means 58 to be in constant communication with the chamber 62. The passages 55 to 57 pass through the sleeve member 60 to the cylindrical member 59 and communicate therewith in a peripherally spaced array so that by rotation of the member 59 the passage 43*a* can communicate, through the chamber 62 solely with the passage 55, or with both passages 55 and 56, or with all the passages 55 to 57.

With the port selection means 58 adjusted as shown in Fig. 2, passage 43*a* communicates through chamber 62 solely with passage 55. Consequently as the piston 1 moves in the direction X, exhaust fluid from chamber 5 flows by way of passage 34, transfer chamber 23, passage 38, exhaust chamber 7, port 42*a*, passage 55, chamber 62, passage 43*a*, transfer chamber 22 and passage 26 to exhaust, and the end of stroke of the piston in the direction X is determined when the selected and effective control port 43*a* is closed by piston land 9. It will be apparent that by suitable adjustment of the member 59 the end of the stroke in the direction X of the piston can be determined when the piston land 9 closes the control port which can be port 42*a* or port 42*b* or port 42*c*. In addition to providing adjustment in the positions of both ends of stroke of the piston relative to the piston cylinder, the two arrays of ports 41, 41*a*, 41*b* and 42*a*, 42*b*, 42*c* and their respectively associated port selection means 47 and 58 can be used to determine the length of stroke of the piston and its effective center of reciprocation relative to the piston cylinder. The shortest stroke of the piston 1 is obtained when passage 48 communicates through chamber 46 with passage 45 and passage 43*a* communicates through chamber 62 with passage 55 (as shown), and the longest stroke of the piston 1 is obtained when passage 48 communicates through chamber 46 with passage 54 and passage 43*a* communicates through chamber 62 with passage 57.

Conveniently the spool valve 10 is arranged so that it is caused to reverse automatically at the end of each stroke of the piston thereby causing the piston to reverse. This can be achieved by the alternating pressure spool chamber 16 being connected alternately to exhaust and with the source of fluid under constant pressure by way of valve means which is controlled by reciprocation of the piston 1 and such a construction will now be described with reference to Fig. 3.

The motor shown in FIG. 3 is similar to that shown in Fig. 1 with the exception that ports 41*a*, 41*b* and the port selection means 47 have been omitted and control port 41 commu-

nicates through passage 45 directly with port 49; consequently the piston 1 has a fixed length stroke and the ends of its strike, in the direction X, is determined by control port 42 being closed by piston land 9 and, in the direction Y by control port 41 being closed by piston land 8.

The piston 1 has a further annular recess 63 which is formed between piston lands 64 and 65. The recess 63 is located so that, at the end of stroke of the piston in the direction X, it communicates with auxiliary ports 66 and 67 in the piston cylinder 2 and, at the end of stroke of the piston in the direction Y, it communicates with auxiliary ports 68 and 69 in the piston cylinder. The auxiliary ports 66 and 68 communicate by way of passages 70, 71, 72 and 33 with the alternating pressure spool chamber 16, the port 67 is adapted to communicate by way of passage 73 with the source of fluid under pressure, and the port 69 communicates by way of passage 74 with exhaust. The piston cylinder 2, piston lands 64, 65 and auxiliary ports 66 to 69 effectively constitute a valve of the type which is known in the art as a "changeover spool valve," the operation of which will now be described.

With the piston 1 moving in the direction X, the end of stroke is determined by the control port 42 being closed by piston land 9 (as illustrated). The piston land 64 is arranged so that, immediately prior to control port 42 being closed, auxiliary port 66 is opened to communicate with recess 63 and therethrough with port 67 and fluid pressure. With passage 73 connected to the source of fluid pressure, fluid under pressure now passes by way of recess 63, port 66 and passages 70, 72 and 33 to the alternating pressure spool chamber 16 (it being noted that port 68 is closed by the full diameter of the piston) thereby causing the spool 11 to reverse and move in the direction against its bias. Reversal of the spool causes the piston to reverse and move in the direction Y. With the piston moving in the direction Y, the end of stroke is determined by the control port 41 being closed by piston land 8. The piston land 65 is arranged so that, immediately prior to control port 41 being closed, auxiliary port 68 is opened to communicate with recess 63 and therethrough with port 69 and exhaust. The alternating pressure spool chamber 16 is now opened to exhaust by way of passages 33, 72, 71, port 68, recess 63, port 69 and passage 74 (it being noted that port 66 is closed by the full diameter of the piston). The spool 11 is thereby caused to reverse and move in the direction of its bias and in so doing causes the piston 1 to reverse and move in the direction X.

It will be realized that in constructions of the motor in which the end of stroke of the piston can be adjusted axially relative to the piston cylinder either at one end of stroke as, for example, in the construction shown in FIG. 1, or at both ends of stroke as, for example, in the construction shown in FIG. 2, reversal timing adjustment means can be provided so that one or more auxiliary ports in the "changeover spool valve" which determine the reversal of the spool 11 can be selected from one or more arrays of auxiliary ports to ensure that the spool 11 is caused to reverse at the end of the piston stroke irrespective of the relative position in the piston cylinder at which the piston stroke ends. To ensure that reversal of the spool 11 remains in phase with reversal of the piston, said reversal timing adjustment means and the port selection means by which the control port or ports are selected are conveniently coupled together for simultaneous adjustment so that when the end or ends of stroke of the piston are adjusted the timing at which the spool 11 is reversed is simultaneously adjusted to maintain reversal of the spool in phase with the end or ends of stroke of the piston. A construction by which reversal of the spool 11 is maintained in phase with selected axial adjustment of one end of stroke of the piston 1 will now be considered with reference to FIG. 4.

The motor shown in FIG. 4 is similar to that shown in FIG. 1 in which the end of stroke of the piston 1 in the direction Y can be selected from three positions and is achieved by adjustment of the port selection means 47 to connect passage 48 with passage 45 or with passages 45 and 53 or with passages 45, 53, and 54.

Reversal timing adjustment means is incorporated in the port selection means 47 and comprises a part annular recess 75 provided in the cylindrical member 50. The recess 75 is conveniently located diametrically opposite the recess 52 and, together with the inner cylindrical wall of the sleeve 51, defines a chamber 76. Four passages 77 to 80 pass through the sleeve member 51 to the cylinder member 50 and communicate therewith in a peripherally spaced array so that by rotation of the cylinder member 50 the passage 77 can communicate, through chamber 76, solely with the passage 78, or only with both passages 78 and 79, or with all the passages 78 to 80. The passage 77 is located to be in constant communication with chamber 76 and communicates by way of the passage 72 with the alternating spool chamber 16. The passages 48, 45, 53, 54 and 77 to 80 and chambers 46 and 76 are so arranged in port selection means 47 that during rotation of the member 50, when passage 48 only communicates with passage 45, all passages 78 to 80 simultaneously communicate with passage 77; when passage 48 only communicates with passages 45 and 53, only passages 78 and 79 communicates with passage 77; and when passage 48 simultaneously communicates with passages 45, 53 and 54, passage 77 only communicates with passage 78.

The passages 78 to 80 communicate with auxiliary ports 68*b*, 68*a* and 68 respectively in the piston cylinder 2. The ports 68*b*, 68*a* and 68 are axially disposed in the piston cylinder in a similar array to the ports 41, 41*a* and 41*b* respectively and are so controlled by piston land 65 that during movement of the piston in the direction Y port 68 is first opened to recess 63 immediately before port 41 is closed by piston land 8; thereafter port 68*a* is opened to recess 63 immediately before port 41*a* is closed by piston land 8; and finally port 63*b* is opened to recess 63 immediately before port 41*b* is closed by piston land 8. Ports 68, 68*a* and 68*b*, when opened by piston land 65 to recess 63 communicate with exhaust by way of port 69 and passage 74.

In operation of the motor shown in Fig. 4 it will be apparent that the end of stroke of the piston in direction X is determined by control port 42 being closed by piston land 9. Immediately before control port 42 is closed, auxiliary port 66 is opened by land 64 to recess 63 and thereby to fluid pressure through port 67. The alternating pressure spool chamber 16 is pressurized and the spool reverses thereby reversing the piston 1. With the cylindrical member 50 adjusted to the position illustrated in FIG. 4, as the piston moves in the direction Y, fluid from pressure chamber 6 passes to exhaust solely by way of port 41 and, immediately before port 41 is closed by piston land 8, auxiliary port 68 is opened to exhaust by way of recess 63 and port 69. Consequently the alternating pressure spool chamber 16 is opened to exhaust by way of passages 33, 72 and 77, chamber 76 and passage 80 thereby causing the spool to reverse and move in the direction of its bias to reverse the piston so that it again moves in the direction X.

If the cylindrical member 50 is adjusted by rotation in the direction Z so that passage 48 only communicates with both passages 45 and 53, the end of stroke of the piston in direction Y is determined when piston land 8 closes port 41*a*; however, by said adjustment of the member 50, passage 77 only communicates through chamber 76 with passages 78 and 79. Consequently during movement of the piston in direction Y the piston land 65 opens auxiliary port 68 without effect and the alternating pressure spool chamber is exhausted only when the piston land 65 opens port 68*a* to port 69 by way of recess 63 which takes place immediately before port 41*a* is closed.

If the cylindrical member 50 is further adjusted in direction Z so that PASSAGE 48 communicates with passages 45, 53 and 54, the end of stroke of the piston in direction Y is determined when piston land 8 closes port 41*b*; however by said further adjustment of the member 50, passage 77 only communicates through chamber 76 with passage 78. Consequently during movement of the piston in the direction Y, the piston land 65 opens auxiliary ports 68 and 68*a* without effect and the alternating pressure spool chamber 16 is exhausted only

when piston land 65 opens auxiliary port 68*b* to port 69 by way of recess 63 which takes place immediately before port 41*b* is closed.

In FIG. 4 the end of stroke of the piston 1 in the direction X is determined by control port 42 being closed by piston land 9 and the end of stroke of the piston in the direction Y is axially adjustable to one of three positions by adjustment of the port selection means 47 and, as above described, the reversal of the spool 11 to reverse the piston is automatically maintained in phase with the selected end of stroke of the piston in the direction Y by alteration of the reversal timing adjustment means incorporated in the port selection means 47 to control communication between the alternating pressure spool chamber 16 and exhaust by way of the array of auxiliary ports 68, 68*a* and 68*b*. In the motor shown in FIG. 2 the end of stroke of the piston 1 in the direction X is axially adjustable to one of three positions by adjustment of the port selection means 58 and the end of stroke of the piston in the direction Y is axially adjustable to one of three positions by adjustment of the port selection means 47 and a construction will now be described with reference to Fig. 5 by which the reversal of the spool 11 to reverse the piston is automatically maintained in phase with the selected ends of stroke of the piston in both axial directions.

As will be apparent from an understanding of the motor shown in FIG. 4, the end of stroke in the direction Y of the piston 1 in FIG. 5 is axially adjustable to one of three positions by adjustment of the port selection means 47 and reversal of the spool 11 to reverse the piston is automatically maintained in phase with the selected end of stroke of the piston in the direction Y in an identical manner to that above described with reference to FIG. 4.

Referring to FIG. 5, the port selection means 58 incorporates reversal timing adjustment means which includes a part annular recess 81 provided in the cylindrical member 59. The recess 81 is conveniently located diametrically opposite the recess 61 and, together with the inner cylindrical wall of the sleeve 60, defines a chamber 82. Four passages 83 to 85 and 70*a* pass through the sleeve member 60 and communicate therewith in a peripherally spaced array so that by rotation of the cylinder member 59 the passage 70*a* can communicate, through chamber 82, with all passages 83 to 85 or only with both passages 84 and 85 solely with passage 85. The passage 70*a* is located to be in constant communication with chamber 82 and communicates by way of passage 72 with the alternating pressure spool chamber 16. The passages 43*a*, 55 to 57, 70*a* and 83 to 85 and chambers 62 and 82 are so arranged in the port selection means 58 that during rotation of the cylinder member 59, when passage 43*a* only communicates with passage 55, all passages 83 to 85 simultaneously communicate with passage 70*a*; when passage 43*a* only communicates with passages 55 and 56, passage 70*a* only communicates with passages 84 and 85; and when passage 43*a* communicates with all passages 55 to 57, passage 70*a* only communicates with passage 85.

The passages 83 to 85 communicate with auxiliary ports 66*a*, 66*b* and 66*c* respectively in the piston cylinder 2. The ports 66*a*, 66*b*, and 66*c* are axially disposed in the piston cylinder 2 in a similar array to the ports 42*a*, 42*b* and 42*c* respectively and are so controlled by piston land 64 that during movement of the piston in the direction X port 66*a* is first opened to recess 63 immediately before port 42*a* is closed by piston land 9; thereafter port 66*b* is opened to recess 63 immediately before port 42*b* is closed by piston land 9; and finally port 66*c* is opened to recess 63 immediately before port 42*c* is closed by piston land 9. Ports 66*a*, 66*b* and 66*c*, when opened by piston land 64 to recess 63, communicate with port 67 which is adapted to be connected to a source of fluid pressure by way of passage 73.

In operation of the motor shown in FIG. 5 it will be apparent that the selected end of stroke of the piston 1 in the direction Y and phased reversal of the spool at said selected end of stroke of the piston is achieved in an identical manner to that in the motor described with reference to FIG. 4. At the end of stroke of the piston in the direction Y the spool is automatically reversed by exhausting of the alternating pressure spool chamber 16 and the spool valve 10 is adjusted to the condition shown in FIG. 5 thereby causing the piston 1 to reverse and move in the direction X.

With the cylindrical member 59 adjusted to the position shown in FIG. 5 and the piston moving in the direction X, fluid from pressure chamber 5 passes to exhaust solely by way of port 42*a* and, immediately before port 42*a* is closed by piston land 9, auxiliary port 66*a* is opened to fluid pressure by way of recess 63 and port 67. Consequently the alternating pressure spool chamber communicates with fluid pressure by way of passages 33, 72, 70*a* chamber 82 and passage 83 thereby causing the spool to reverse and move in the direction against its bias to reverse the piston so that it again moves in the direction Y.

If the cylindrical member 59 is adjusted by rotation in the direction Z so that passage 43*a* only communicates through chamber 62 with both passages 55 and 56, the end of stroke of the piston in the direction X is determined when the piston land 9 closes port 42*b*; however, by said adjustment of the member 59, passage 70*a* only communicates through chamber 82 with passages 84 and 85. Consequently during movement of the piston in direction X the piston land 64 opens auxiliary port 66*a* without effect and the alternating pressure spool chamber 16 communicates with fluid pressure only when land 64 opens port 66*b* to port 67 by way of recess 63 which takes place immediately before port 42*b* is closed.

If the cylindrical member 59 is further adjusted in the direction Z so that passage 43*a* communicates with passages 55 to 57, the end of stroke of the piston in the direction X is determined when the piston land 9 closes port 42*c*; however by said further adjustment of the member 59, passage 70*a* only communicates by way of chamber 82 with passage 85. Consequently during movement of the piston in the direction X the piston land 64 opens auxiliary ports 66*a* and 66*b* without effect and the alternating pressure spool chamber 16 communicates with fluid pressure only when land 64 opens port 66*c* to port 67 by way of recess 63 which takes place immediately before port 42*c* is closed.

I claim:

1. A fluid pressure operated motor, comprising in combination:
   a. a piston slidably mounted in a piston cylinder;
   b. means to permit axial movement of said piston; including:
      1. means to exhaust fluid from a first pressure chamber associated therewith;
   c. means to arrest said piston at the end of its stroke in one sense of axial direction, including:
      1. means communicating said first pressure chamber with a first control port in said piston cylinder;
      2. means to exhaust fluid from said first pressure chamber through said first control port;
      3. and first piston land means controlling said fluid exhaust through said first control port by closing said first control port to form a blockage to said fluid exhaust to arrest said piston at said one end of stroke;
   d. means to alternately contract and expand a second pressure chamber concurrently with alternate expansion and contraction of said first pressure chamber during reciprocation of said piston;
   e. means to arrest said piston at the end of its stroke in a second sense of axial direction, including:
      1. means communicating said second pressure chamber with a second control port;
      2. means to exhaust fluid from said second pressure chamber through said second control port;
      3. and second piston land means controlling said fluid exhaust through said second control port by closing said second control port to form a blockage to said fluid exhaust to arrest said piston at said second end of stroke;

f. said first and second piston land means, together with said piston cylinder, defining an exhaust chamber communicating with each said pressure chamber in its contracting phase;

g. and means to maintain at least one of said first and second control ports in communication with said exhaust chamber, including:

1. valve means closing communication between said second control port and exhaust and opening communication between said first control port and exhaust, in a first operative position;

2. said valve means opening communication between said second control port and exhaust and closing communication between said first control port and exhaust, in a second operative position.

2. A fluid pressure operated motor as defined in claim 1, further comprising:

a. further valve means having a first operative condition wherein said second pressure chamber communicates with a fluid under pressure and said first pressure chamber communicates with exhaust through said first control port;

b. said further valve means having a second operative condition wherein said first pressure chamber communicates with a fluid under pressure and said second pressure chamber communicates with exhaust through said second control port;

c. and means to adjust said further valve means from said first operative condition to said second operative condition and vice versa to thereby reciprocate said piston.

3. A fluid pressure operated motor as defined in claim 2, further comprising:

a. at least one input port in said piston cylinder axially disposed between said first and second control ports, said input port being in communication with said exhaust chamber during reciprocation of said piston;

b. said further valve means communicating said first and second pressure chambers with said input port;

c. said first piston land means closing said first control port to communication with said exhaust chamber during movement of said first piston land means axially toward said input port;

d. said second piston land means closing said second control port to communication with said exhaust chamber during movement of said second piston land means axially toward said input port.

4. A fluid pressure operated motor as defined in claim 2, further comprising means to couple said valve means and said further valve means together for substantially simultaneous adjustment from their respective first operative conditions to their respective second operative conditions and vice versa.

5. A fluid pressure operated motor as claimed in claim 4, wherein said valve means and said further valve means are provided by a spool valve which comprises a spool axially slidable for reciprocation in a spool cylinder wherein said spool, at one end of its stroke, has means to adjust said spool valve to provide said first operative conditions and, at the other end to its stroke, has means to adjust said spool valve to provide said second operative conditions.

6. A fluid pressure operated motor as claimed in claim 5, wherein the spool valve is pressure biased and the spool has opposed working faces of different effective areas, the working face of smaller effective area defining with one part of the spool cylinder a constant pressure spool chamber connected to a source of fluid under constant pressure and the working face of larger effective area defining with another part of the spool cylinder an alternating pressure spool chamber and having means to communicate alternately with fluid under pressure and with exhaust to reciprocate said spool when the constant pressure spool chamber communicates with fluid pressure.

7. A fluid pressure operated motor as claimed in claim 6, wherein said valve means and said further valve means are operatively controlled by the position of the piston in its cylinder wherein, with said piston adjacent the end of its stroke in said one sense of axial direction said valve means and further valve means are substantially simultaneously adjusted from said first operative conditions to said second operative conditions and with the piston adjacent the end of its stroke in said second sense of axial direction said valve means and further valve means are simultaneously adjusted from said second operative conditions to said first operative conditions.

8. A fluid pressure operated motor as claimed in claim 7, further comprising changeover valve means to control the flow of fluid under pressure to, and exhaust from, said alternating pressure spool chamber, said changeover valve means being operatively coupled to said piston; wherein, in a first operative condition, at one end of stroke of the piston, said alternating pressure spool chamber is connected by said changeover valve means to exhaust to move said spool to the end of its stroke in the direction of its bias, and in a second operative condition, at the other end of stroke of said piston, said alternating pressure spool chamber is connected by said changeover valve means to fluid under pressure to reverse said spool and move it axially to the end of stroke in the direction against its bias.

9. A fluid pressure operated motor as claimed in claim 8, wherein said changeover valve means comprises auxiliary ports in said piston cylinder; and further piston land means controlling the communication of said auxiliary ports to fluid under pressure and exhaust during reciprocation of said piston.

10. A fluid pressure operated motor as claimed in claim 1, further comprising an array of ports axially diaposed in said piston cylinder and port selection means to select at least one port in said array as the first control port for communication with exhaust, the end of stroke of the piston in said one sense of axial direction being determined when said selected at least one port is closed by said piston land means.

11. A fluid pressure operated motor as claimed in claim 1, further comprising:

a. a first array of ports axially disposed in said piston cylinder and first port selection means to select at least one port in said first array as the first control port, the end of stroke of said piston in said one sense of axial direction being determined when the selected at least one port of said first array is closed by said piston land means;

b. and a second array of ports axially disposed in said piston cylinder and second port selection means to select at least one port in said second array as the second control port for communication with exhaust, the end of stroke of said piston in said second sense of axial direction being determined when the selected at least one port of said second array is closed by said piston land means.

12. A fluid pressure operated motor as defined in claim 7, further comprising:

a. an array of ports axially disposed in said piston cylinder;

b. port selection means to select at least one port in said array as the first control port for communication with exhaust, the end of stroke of said piston in said one sense of axial direction being determined when said selected at least one port is closed by said piston land means;

c. reversal timing adjustment means operatively associated with said valve means and said further valve means, said reversal timing adjustment means being coupled for substantially simultaneous adjustment with said port selection means.

13. A fluid pressure operated motor as defined in claim 7, further comprising:

a. a first array of ports axially disposed in said piston cylinder;

b. first port selection means to select at least one port in said first array as the first control port, the end of stroke of said piston in said one sense of axial direction being determined when the selected at least one port of said first array is closed by said piston land means;

c. a second array of ports axially disposed in said piston cylinder;

d. second port selection means to select at least one port in said second array as the second control port for communication with exhaust, the end of stroke of said piston in said second sense of axial direction being determined when the selected at least one port of said second array is closed by said piston land means;

e. first reversal timing adjustment means operatively associated with said valve means and said further valve means, said first reversal timing adjustment means being coupled for substantially simultaneous adjustment with said first port selection means;

f. and second reversal timing adjustment means operatively associated with said valve means and said further valve means, said second reversal timing adjustment means being coupled for substantially simultaneous adjustment with said second port selection means.

14. A fluid pressure operated motor as defined in claim **12**, further comprising:

a. changeover valve means comprising auxiliary ports in said piston cylinder, said changeover valve means controlling the flow of fluid under pressure to, and exhaust from, said alternating pressure spool chamber, said changeover valve means being operatively coupled to said piston;

b. further piston land means controlling the communication of said auxiliary ports to fluid under pressure and exhaust during reciprocation of said piston;

c. wherein said reversal timing adjustment means comprises an array of auxiliary ports axially disposed in said piston cylinder and controlled by said further piston land means;

d. auxiliarv ports selection means to select at least one auxiliary port in said array, said auxiliary port selection means being coupled for substantially simultaneous adjustment with said port selection means;

e. and said alternating pressure spool chamber alternately communicating with exhaust and with fluid under pressure through said selected at least one auxiliary port at a predetermined end of stroke of said piston.

15. A fluid pressure operated motor as defined in claim **1**, further comprising, fluid resistance means and means to communicate each contracting pressure chamber with exhaust through said fluid resistance means to cushion the end of stroke of said piston.