Aug. 14, 1951 G. C. HARBISON 2,564,478

REMOVABLE SHELF

Filed Jan. 18, 1950

Fig. 1.

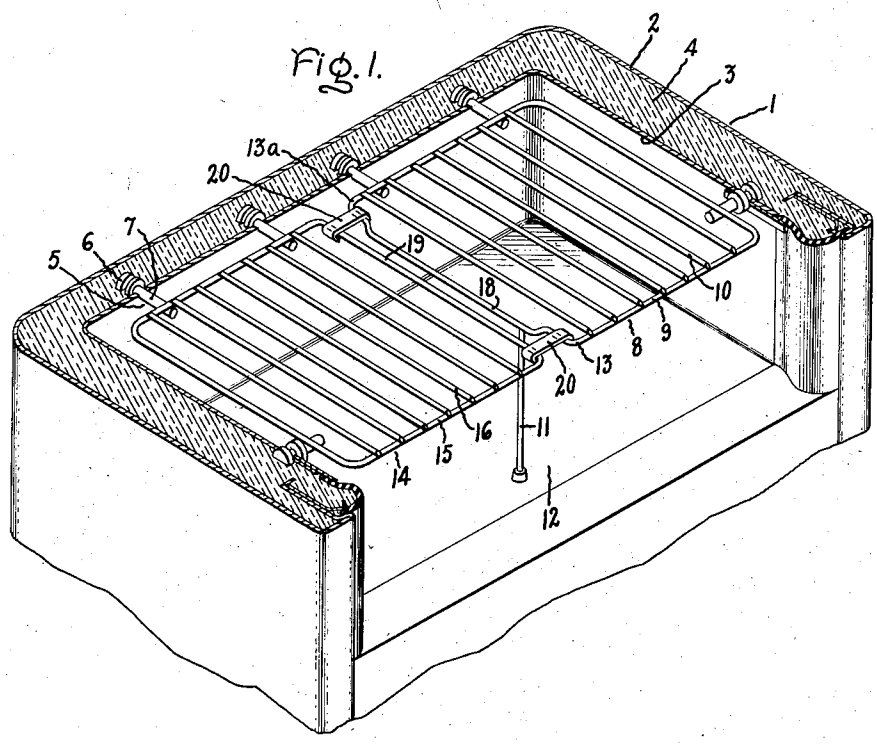

Fig. 2.

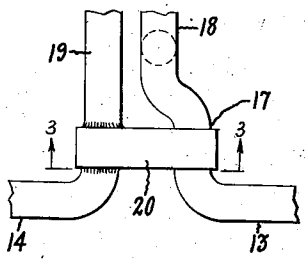

Fig. 4.

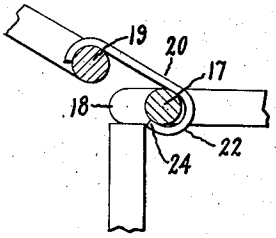

Fig. 3.

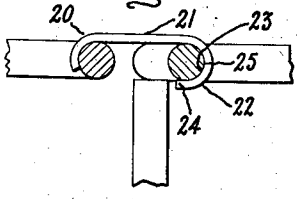

Inventor:
George C. Harbison,
by William G. Edwards, Jr.
His Attorney.

Patented Aug. 14, 1951

2,564,478

UNITED STATES PATENT OFFICE

2,564,478

REMOVABLE SHELF

George C. Harbison, Erie, Pa., assignor to General Electric Company, a corporation of New York

Application January 18, 1950, Serial No. 139,249

2 Claims. (Cl. 211—153)

1

This invention relates to removable shelf structures and, in particular, to a removable shelf of the type located in the food storage compartment of a household refrigerator.

The housewife, in arranging her food for storage within a refrigerator, occasionally faces the problem of not having storage space of adequate height to hold the article she wishes to store. For this reason, removable shelves are frequently provided in the food storage compartment of houshold refrigerators. However, some removable shelves have been found objectionable for the reason that in removing an article from an area below the removable shelf, for example, the article might accidentally hit the removable shelf and dislodge it from its supports.

It is an object of this invention to provide an improved removable shelf for a refrigerator.

It is a further object of this invention to provide a removable shelf that is securely locked in place until it is intentionally removed.

In carrying out the objects of this invention, a removable shelf structure is provided wherein the removable shelf is supported by an adjoining fixed shelf. The removable shelf must be tilted to a substantial angle before it can be detached from the fixed shelf.

Further objects and advantages of this invention will become apparent and the invention will be more clearly understood from the following description referring to the accompanying drawing and the features of novelty which characterize this invention will be pointed out with particularity in the claims annexed to and forming a part of this specification.

In the drawing, Fig. 1 is a front elevation view of a portion of the food storage compartment of a refrigerator having the improved removable shelf positioned therein; Fig. 2 is a plan view of the connection between the front portion of the removable shelf and the stationary shelf; Fig. 3 is a front elevation view, partly in section, of the connection between the removable shelf and the fixed shelf in the assembled position; and Fig. 4 is a view similar to Fig. 3 showing the removable shelf in a partially removed position.

Referring to the drawing, a refrigerator 1 is shown having an outer shell 2 and an inner shell 3 separated by conventional insulating material 4. A plurality of shelf supports 5 are secured to the inner shell 3 of the refrigerator. Each support comprises a base 6 and an extended portion 7. Normally, a shelf would be maintained in a horizontal plane by supports 5.

2

A fixed shelf 8, comprising a frame or rod member 9 and rib portions 10, is secured to a plurality of the supports 5 in any suitable manner, such as welding, or it may be removably secured to these supports by a conventional clip attachment (not shown). A vertical support 11 is attached to frame 9 and rests on bottom portion 12 of the refrigerator to support the inner corner 13 of fixed shelf 8.

A removable shelf 14, comprising a frame 15 and ribs 16, is placed on, but not secured to, a plurality of the supports 5. Shelf 14 is prevented from accidental tilting or disassembly by securing it in the hereinafter described manner to fixed shelf 8.

The structure of shelf 14 is such that it can be separated from fixed shelf 8 and removed from the refrigerator only by first tilting it to a substantial angle. Specifically, inner corners 13 and 13a of the fixed shelf 8 are formed, as shown in Fig. 2, to provide identations or shafts 17 which are parallel to, but not in line with, inner portion or section 18 of shelf 8.

Inner rod section or portion 19 of frame 15 of shelf 14 is parallel to section 18 of shelf 8. In its normal position, when installed in refrigerator 1, shelf 14 is so located that inner rod section 19 of frame 15 is only slightly spaced from inner section 18 of fixed shelf 8.

A strap 20 is secured in any suitable manner, such as welding, to the forward and rearward ends of rod section 19 of frame 15. Each strap 20, in addition to the portion used for securing it to section 19, includes a horizontally extended portion 21 and a looped or hook portion 22. Looped portion 22 has an inner radius 23 that is equal to the radius of the cross section of the frame 9 of shelf 8. End 24 of each strap 20 extends around indentation 17 of frame 9 until it is past the vertical center line of that portion. It is important that rod section 19 of frame 15 be separated from section 18 of shelf 8 at a distance less than half the diameter of shafts 17 on frame 9. If this spacing is used, then looped portion 22 prevents strap 20 from being vertically lifted away from shaft 17 of frame 9.

In accordance with the previous description, section 18 of frame 9 is offset from indentations 17 of frame 9; consequently, if shelf 14 is rotated or tilted with the center of shafts 17 as the rotational axis, until shelf 14 is sufficiently above the plane of shelf 8, as shown in Fig. 4, then section 19 of shelf 14 is not restricted by section 18 of shelf 8 from moving towards shafts 17 of frame 9. Loops 22 are then disengageable from

shafts 17. Thereupon, shelf 14 can be removed from its connection to shelf 8 and taken out of the refrigerator. It can be seen that each of the hook portions 22 partially encircles the corresponding indentation or offset section 17, and the distance between the removable shelf 14 and the tip or extremity of each of these hook portions is less than the distance between the outer surface of the section 18 and the inner surfaces of the offset sections 17, so that, when the fixed and removable shelves are in the same plane as shown in Figs. 1, 2 and 3, movement of the removable shelf in this plane is limited by the section 18 to prevent disassembly of the removable shelf. On the other hand, referring to Fig. 4, it can be seen that when the removable shelf is rotated to the position there shown out of the plane of the fixed shelf, the distance between the removable shelf and the tip of each hook portion 22 is greater than the thickness or diameter of the frame portion or rod 9 along a line in the plane of the removable shelf in this position, so that disassembly of the removable shelf is thereby afforded.

With the embodiment of this invention as shown, it has been found that a removable shelf can be secured within the food storage compartment of a refrigerator to give adequate support for any food placed thereon. There is little or no danger of accidentally knocking the shelf off its supports and yet the shelf may be easily removed when it is so desired.

Modifications of this invention will occur to those skilled in the art and it is desired to be understood, therefore, that this invention is not limited to the particular arrangement disclosed but that the appended claims are intended to cover all modifications which are within the spirit and scope of this invention.

What I claim as new and desire to secure by Letters Patent of the United States is:

1. A shelf assembly comprising a fixed shelf, a removable shelf, means for supporting said removable shelf in coplanar juxtaposition with said fixed shelf, said fixed shelf including a frame portion adjacent said removable shelf, said frame portion including a first section comprising a major portion thereof extending adjacent and parallel to said removable shelf and two spaced sections offset inwardly from said first section in the plane of said fixed shelf, and two straps each secured to said removable shelf, each of said straps including a hook portion partially encircling a corresponding one of said offset sections, the distance between said removable shelf and the tip of each of said hook portions being less than the distance between the outer surface of said first section and the inner surfaces of said offset sections whereby movement of said removable shelf in the plane of said shelves is limited by said first section to prevent disassembly thereof, said removable shelf being rotatable to a second position out of the plane of said fixed shelf and out of line with said first section, the distance between said removable shelf and the tip of said hook portions being greater than the thickness of said frame portion along a line in the plane of said removable shelf in said second position whereby disassembly of said removable shelf is afforded.

2. A shelf assembly comprising a fixed shelf, a removable shelf, means for supporting said removable shelf in coplanar juxtaposition with said fixed shelf, said removable shelf including a first rod forming a first bounding frame, said fixed shelf including a second rod forming a second bounding frame, the portion of said second rod along the edge of said second frame adjacent said removable shelf including a first section parallel to the adjacent edge of said frame of said removable shelf and two spaced sections offset inwardly from said first section in the plane of said fixed shelf, and two straps each secured to said removable shelf, each of said straps including a hook portion partially encircling a corresponding one of said offset sections, the distance between said removable shelf and the tip of said hook portions being less than the distance between the outer surface of said first section and the inner surfaces of said offset sections whereby movement of said removable shelf in the plane of said shelves is limited by said first section to prevent disassembly thereof, said removable shelf being rotatable to a position out of the plane of said fixed shelf and out of line with said first section, the distance between said removable shelf and the tip of said hook portions being greater than the diameter of said second rod whereby disassembly of said removable shelf is afforded.

GEORGE C. HARBISON.

REFERENCES CITED

The following references are of record in the file of this patent:

UNITED STATES PATENTS

Number	Name	Date
1,930,773	Saum	Oct.17, 1933
2,091,607	Nave	Aug. 31, 1937
2,169,763	Kucher	Aug. 15, 1939
2,195,263	Siebert	Mar. 26, 1940
2,251,799	Nave	Aug. 5, 1941
2,262,578	Ellis	Nov. 11, 1941
2,294,155	Boddy	Aug. 25, 1942
2,319,470	Nobles	May 18, 1943
2,352,345	Rundell	June 27, 1944