United States Patent [19]

Lovisa et al.

[11] **3,858,993**

[45] **Jan. 7, 1975**

[54] **REUSABLE TIE ASSEMBLY FOR CONCRETE FORMS**

[75] Inventors: **Peter R. Lovisa**, Pelham; **Dusan Tausanovitch**, Northport, both of N.Y.

[73] Assignee: **Tullio E. Lovisa**, Huntington Station, N.Y. ; a part interest

[22] Filed: **Apr. 10, 1974**

[21] Appl. No.: **459,566**

Related U.S. Application Data

[62] Division of Ser. No. 232,450, March 7, 1972, Pat. No. 3,822,860.

[52] **U.S. Cl.** ..... **403/247**, 52/753 G, 52/754, 403/256, 403/374, 403/409

[51] **Int. Cl.** **F16b 2/14**, F16b 9/00

[58] **Field of Search** ..... 52/753 G, 754, 755, 756; 403/247, 252, 254, 256, 374, 409

[56] **References Cited**

UNITED STATES PATENTS

676,984	6/1901	Hofbauer	403/409 X
1,052,200	2/1913	Adams	403/247 X
2,353,831	7/1944	Keffer	403/409 X
2,406,668	8/1946	Cohen	403/374
2,562,483	7/1951	Bender	403/247
3,003,733	10/1961	Peterson	52/755 X
3,493,272	2/1970	Sylvester et al.	403/374 X

FOREIGN PATENTS OR APPLICATIONS

117,947	1/1944	Australia	52/753 G

Primary Examiner—Werner H. Schroeder
Attorney, Agent, or Firm—Kane, Dalsimer, Kane, Sullivan and Kurucz

[57] **ABSTRACT**

A retractable, removable and reusable tie assembly for concrete forms which includes a single tie rod, and an internal spreader and spacing system which includes a sleeve means, the spreader system having built-in provisions for internal spreading and spacing of forms in such a manner as to permit the tie rod to be partially withdrawn on one side of the form facilitating the installation of the closing form, on the opposite side, and then to be inserted to engage and lock with the internal spreader system, thus keeping the two adjacent sides of the forms in a definite predetermined position apart during the concrete pour, then to be removed undamaged from the hardened concrete prior to dismantling of the forms, leaving the internal spreader in the concrete to be removed after stripping of the forms without damaging the internal spreader.

9 Claims, 13 Drawing Figures

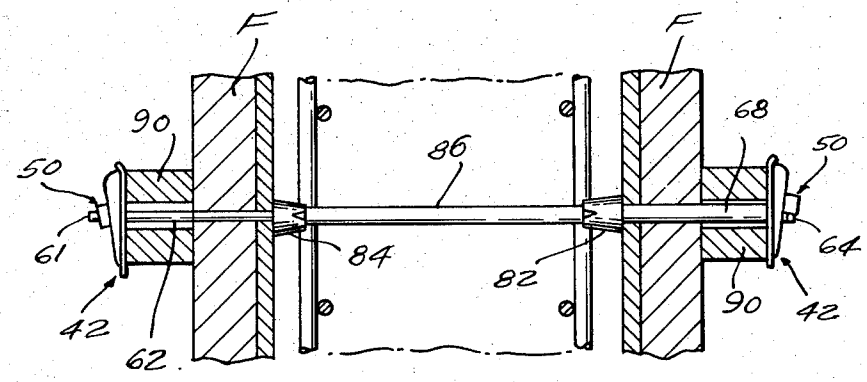

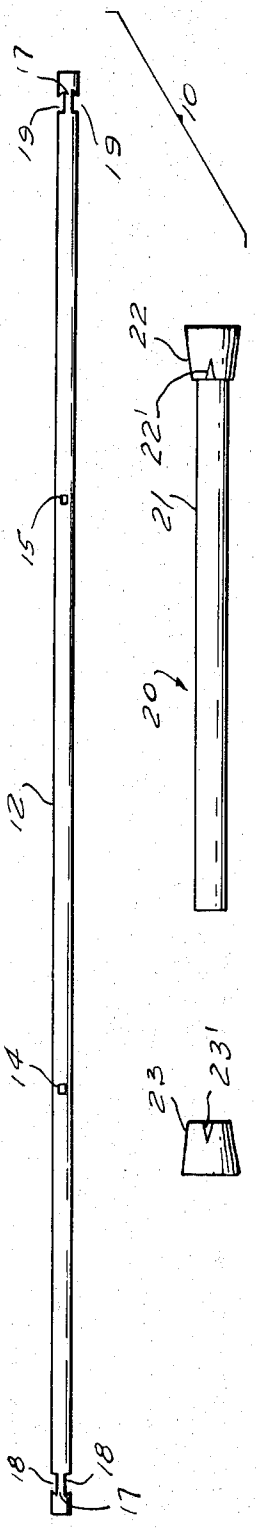

FIG. 1

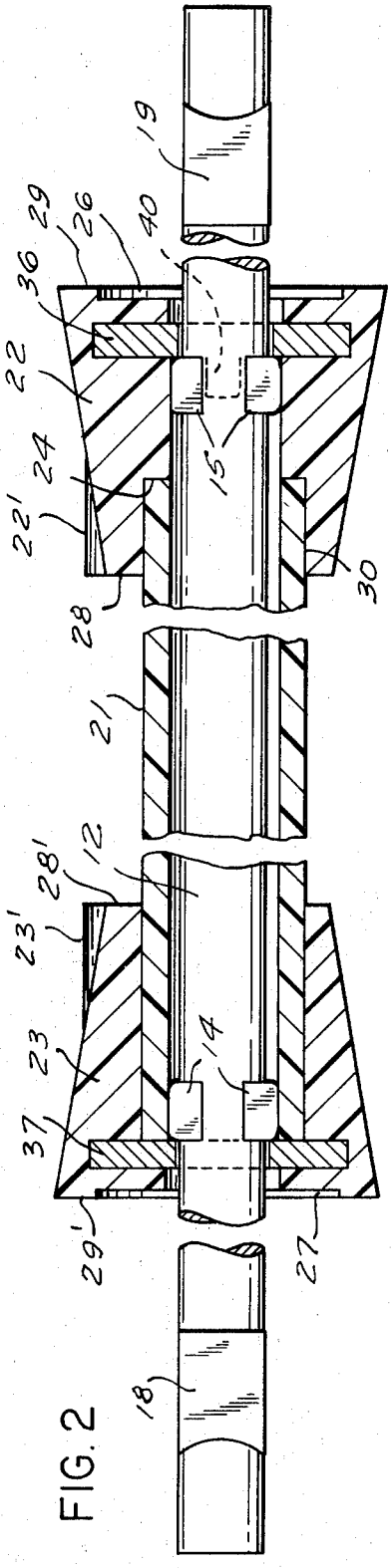

FIG. 2

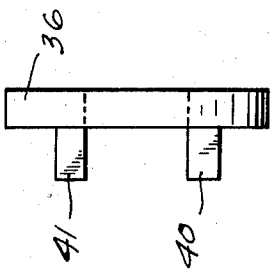

FIG. 3

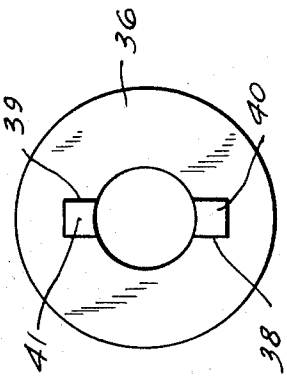

FIG. 4

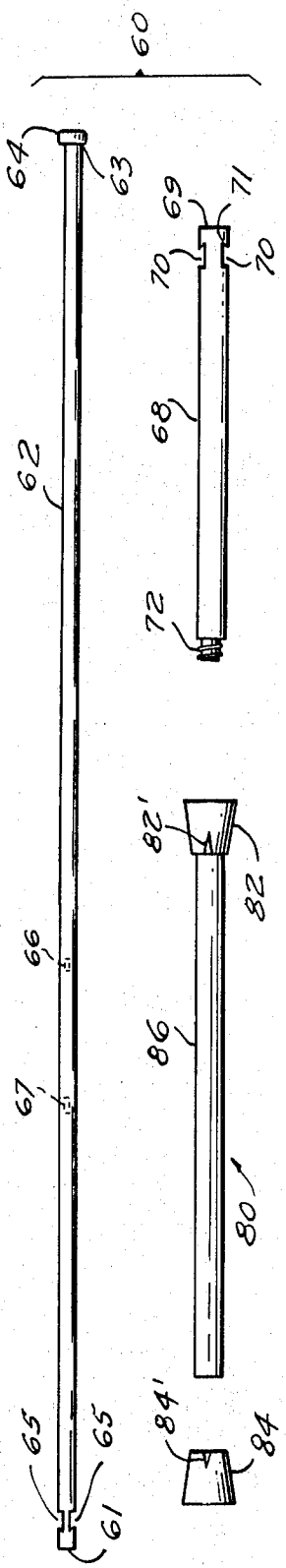
60
64
63
69
71
70
70
68
62
72
82'
82
66
86
67
80
84'
84
65
65
61

FIG. 5

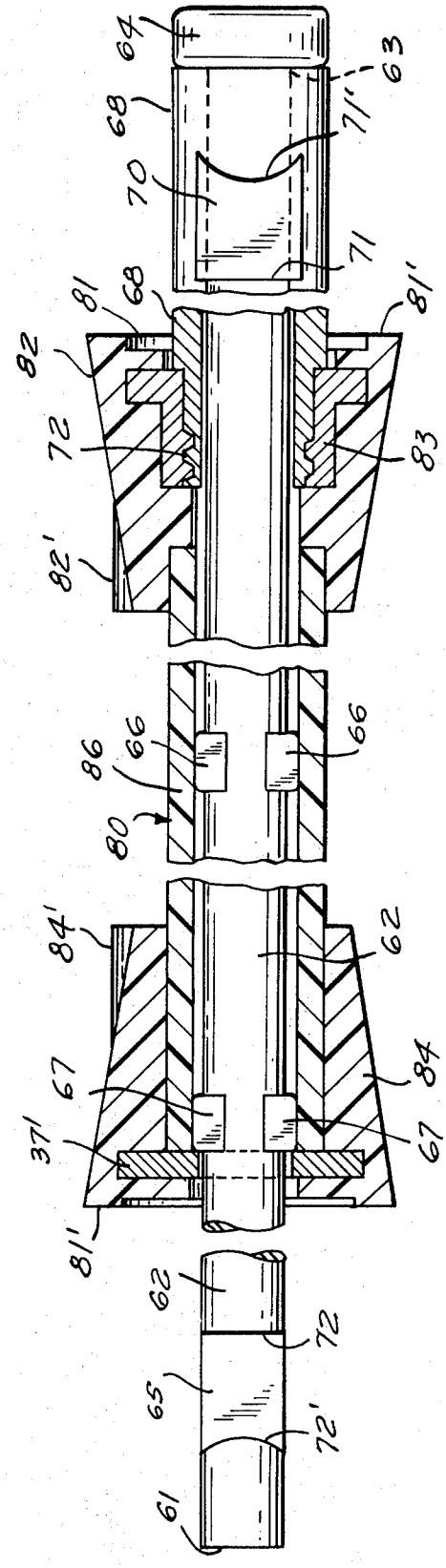
64
63
68
71'
70
71
81
68
81'
82
72
83
82'
66
66
86
80
84'
62
84
67
67
37'
67
81'
62
72
65
72'
61

FIG. 6

FIG. 7

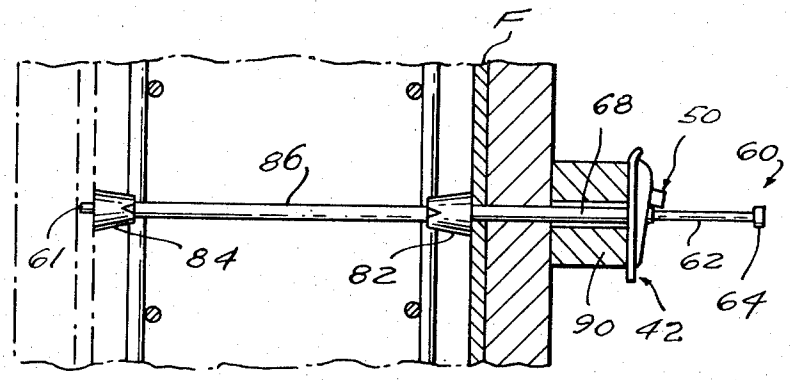

FIG. 8

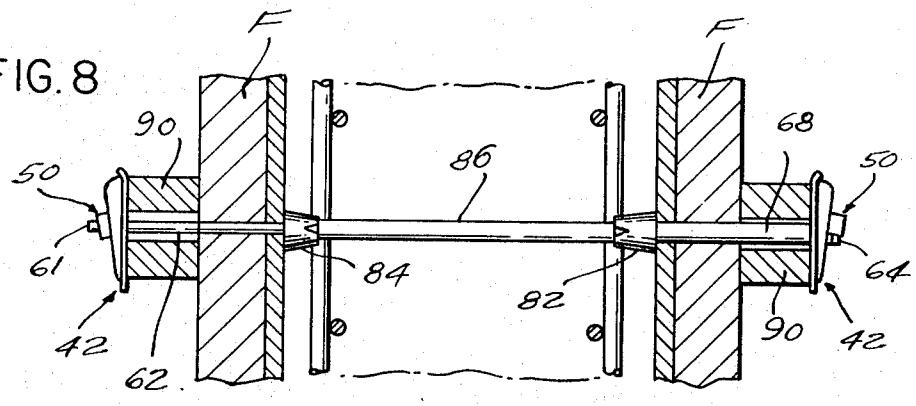

FIG. 9

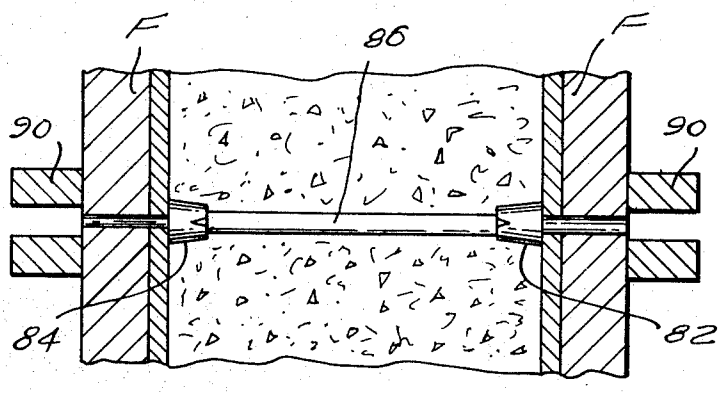

FIG. 10

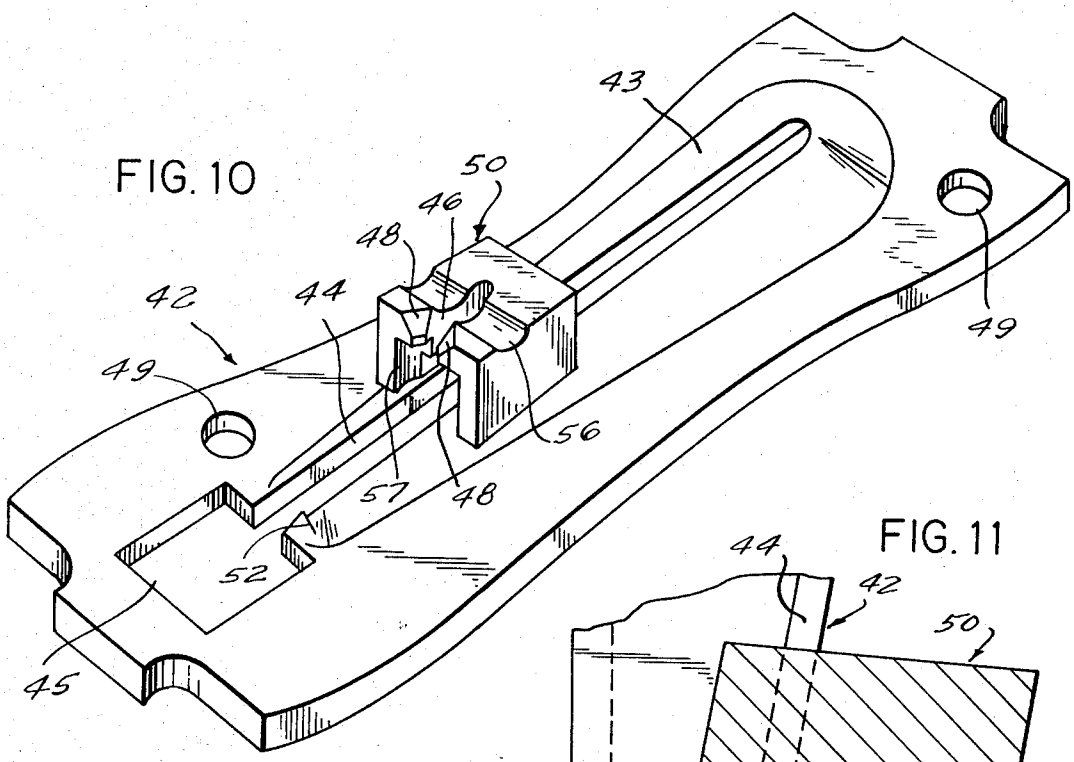

FIG. 11

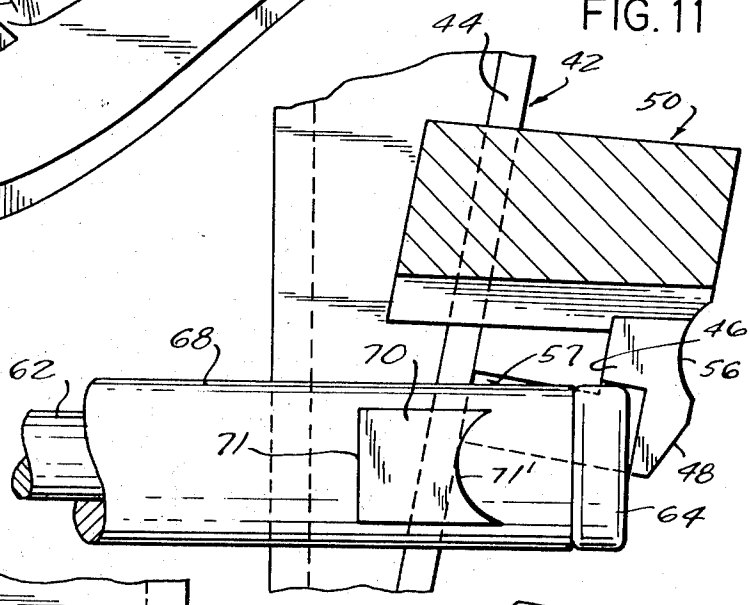

FIG. 12

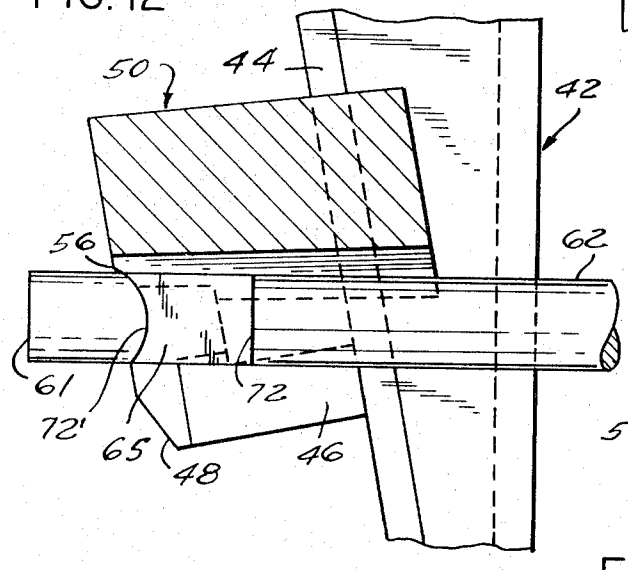

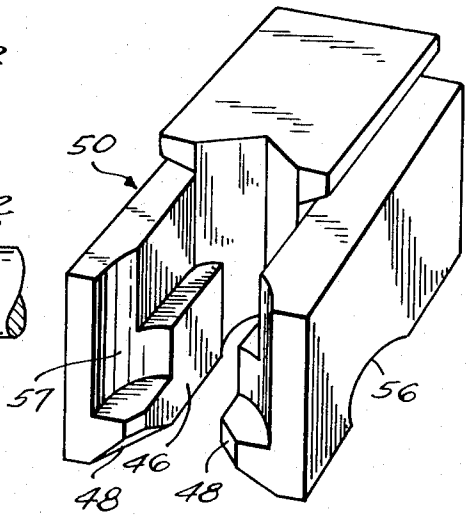

FIG. 13

REUSABLE TIE ASSEMBLY FOR CONCRETE FORMS

This is a division, of application Ser. No. 232,450, filed Mar. 7, 1972, now Pat. No. 3,822,860.

BACKGROUND OF THE INVENTION

The general purpose of tie assemblies as a tensile unit is to secure forms in place against the lateral pressure of unhardened concrete.

There are three basic types of ties for concrete forms. First, a continuous single tie rod, usually equipped with two weakened break points at certain distance from the concrete faces. The external parts or ends of the ties, after the concrete is hardened, are twisted, broken at the weakened points and removed. The second type of tie is a reusable tapered tie, removed from the concrete wall in the direction of larger rod diameter. The third type of tie is an internal disconnecting tie which consists of a threaded inner part that is lost in the concrete and two removable end bolts which project through the form. In all cases, holes left in the concrete surface are plugged or patched by grout.

The first type of tie, (commonly called "snap tie"), break back tie, have a smaller cross section, and a weakened section for break back and are feasible only for lighter concrete pressures. They are used with a simple wedge type holding devices, which are hammered in place for easy adjustment of the forms.

The snap ties are a single unit tie with a built-in spreader system — washers, or cones, but has disadvantages in closing and stripping operations of the forms. After the first side of the form is erected and reinforcing steel is installed, the snap tie has to be inserted from the inner face of these forms through the hole in the plywood sheet. In this position snap ties project through the thickness of the future wall and in addition, about 8 inches past the face of the concrete surface. This condition creates time consuming work in matching and pushing "fishing" of ties through the large number of holes on the plywood sheet when it is installed on the opposite side.

Similar difficulties exist in stripping of the forms. Usually, a form panel or plywood sheet gets stuck on the projected tie heads and long tie ends, which are nearly impossible to place exactly parallel to each other.

To overcome this, ends of snap ties are usually broken before stripping of forms. This cannot be done after the minimum required curing period of the concrete has elapsed since the ties cannot be twisted and broken because they will rotate in the still insufficiently hardened or "green" concrete. Forms have to remain in place for a longer period and the reusability of the forms is decreased. Finishing can not take place while concrete is still "green" or relatively soft.

The second type of tie, a tapered tie, requires a coating before each reuse, needs to be hammered or rotated, or both, after concrete is poured, which often requires overtime work. The spreader system is independent of the tie and as such is not positive and reliable. Manufacture and machining of tapered ties is expensive and, therefore, uneconomical for general use.

The third type of tie has an internal disconnecting part and two removable threaded end bolts, commonly known as coil type, and is generally used where heavier loads are required or when using large forming panels

known as "gang" forms. The bolt ends require screwing and the use of tools to secure them to the form which is time consuming and adds to the labor costs.

Conditions for closing and stripping of forms are much better than with a break back tie, but still represent a two man job to match and thread end bolts with intermediate threaded connection, especially for bolts out of reach, located in the middle part of large form panels.

A reusable concrete form tie is disclosed in U.S. Pat. No. 3,437,309. The tie assembly disclosed is provided with a yieldable tube with a tie rod slidably disposed therein, the tube being employed as the sleeve means between the forms. After the forms have been removed the entire assembly, including the tie rod, is removed from the concrete wall.

SUMMARY OF THE INVENTION

The present invention, combines the benefits of snap ties as a single tie rod unit, but without being restricted to a small cross-section and with the benefits of removable end bolts of the coil type tie, thereby providing greatly reduced labor costs in the forming operation, freely retractable, easily installed and entirely withdrawn with forms in place. The removable tie rod with a remotely engaged internal spreader assembly represents an entirely new and unique type of tie, thus offering an improved technique in forming operations.

The invention herein generally contemplates the provision of a reusable tie assembly for concrete forms capable of being disassembled after use and which is readily removed from the concrete wall or structure without damage to any portion of the tie assembly. The tie assembly includes an internal spreader means adapted to be positioned between concrete forms and to provide internal spreading and spacing means as well as a passage for receiving a tie rod. The tie rod is removably mounted in the passage of the sleeve means and is provided with means defining surfaces engageable with the rod and internal spreader means so that the rod and internal spreader means are disengageable from each other after the concrete has been poured. The tie rod is removable therefrom while the forms remain in an erected position thereby permitting the stripping of the forms from the concrete without the necessity of severing tie rods or holding the forms in a position for removal from ends of tie rods embedded in the concrete and with the subsequent removal of the internal spreader means without damage. The invention also contemplates the provision of a novel wedge for removably mounting to the forms and adapted to releasably couple to the ends of the tie rod regardless of the plane of the tie rod passing through the concrete forms.

It is therefore an object of the present invention to provide an improved type of tie assembly which will facilitate the erection and stripping of concrete forms; which readily reduces the labor costs attendant thereto, and which can be disassembled prior to the stripping operation after the concrete structure has been formed. Another object of the invention is to provide a tie assembly which can be easily and quickly installed having a variety of uses including "gang forming."

Another object of the invention is to provide a tie assembly which is relatively inexpensive to manufacture, economical to use, readily assembled and disassembled prior to and subsequent to use, with all parts being re-

usable. Another object of the invention is to provide wedges which are employed to anchor or rigidly mount the tie rod to the form to prevent lateral movement of the tie rod assembly after erection of the forms and which can be readily removed from the form and easily disengaged from the tie rod.

DESCRIPTION OF THE DRAWINGS

FIG. 1 is an exploded view which illustrates one form of a tie assembly of the invention herein.

FIG. 2 is an elevational sectional view of the tie assembly ready for use. FIG. 3 is a side elevational view of a washer means for releasably mounting the elastomeric sleeve means to the tie rod of the assembly shown in FIGS. 1 and 2.

FIG. 4 is a plan view of the washer means illustrated in FIG. 3.

FIG. 5 is an exploded view of another form of the tie assembly of the invention herein.

FIG. 6 is an elevational sectional view of the tie assembly ready for use.

FIGS. 7, 8 and 9 illustrate the steps for erecting and stripping concrete forms employing the tie assembly of the invention herein.

FIG. 10 is a perspective view of the novel wedge assembly for removably mounting to the ends of the tie rod of FIGS. 1 and 3.

FIG. 11 illustrates the wedge of FIG. 10 mounted to an end of the tie rod of FIG. 1.

FIG. 12 illustrates the wedge of FIG. 10 mounted to the sleeve end of the tie rod of FIG. 5.

FIG. 13 is a perspective view of the tie rod coupling means before being mounted to the wedge of FIG. 10.

DESCRIPTION OF THE PREFERRED EMBODIMENT

For a better understanding of the invention herein reference is had to the drawings and particularly to the embodiment of FIGS. 1 through 4.

Tie assembly 10 includes tie rod 12 and internal spreader means 20. Internal spreader means 20 comprises a yieldable elastomeric tubular sleeve 21 having mounted at one end 24 a frustro conical cone 22. A passage extending through cone 22 is formed so as to be in axial alignment with the passage of tubular sleeve 21. Cone 22 is generally formed of hard rubber such as neoprene.

Cone 22 has a lower base 26 and an upper base 28 with an annular recess 30 formed therein and having a diameter substantially equal to the outside diameter of sleeve 21. The annular recess 30 facilitates mounting cone 22 on end 24 by providing contact surfaces within the annular recess for receiving a suitable adhesive so that end 24 is bonded thereto.

Cone 22 has embedded therein adjacent base 26 slotted washer 36. Slotted washer 36 is formed of a rigid material such as steel and forms part of the locking mechanism for removably mounting internal spreader means 20 on rod 12. Slotted washer 36 may be formed by a stamping procedure wherein slots 38 and 39 are formed diametrically opposite to each other. The portion of the slot which is stamped from washer 36 forms depending projections 40 and 41. Also, formed around the outer edge of base 26 is annular rim 29 which serves as a seal to prevent leakage of concrete through the holes in the forms "F".

A removable cone 23 is formed of a hard rubber material such as neoprene and is made having the same configuration as cone 22. A second steel washer 27 is embedded in the base 27 of cone 23 and may be slotted as illustrated in FIG. 4 but is preferably provided without slots. Also, a similar sealing rim 29' as formed on base 26 is provided on base 27. Formed on the lateral surface of cones 22 and 23 and adjacent their respective upper bases 28 and 28' are raised projections 22' and 23' so as to provide stop means to prevent rotation thereof when retracting or removing the tie rod 12.

Tie rod 12 is made of a material having high tensile and shearing properties such as suitable types of steel. Small projections 14 are formed on rod 12 and are positioned diametrically opposite to each other. Projections 14 may be made by simply pressing the steel rod so as to die cut the rod to form a raised projection on each side thereof. Similarly formed projections 15 are spaced from projections 14 a distance from each other substantially equal to the length of sleeve means 20. When mounting internal spreader means 20 on rod 12 one end of the rod is passed through cone 22 and tubular sleeve 21. Cone 22 is then rotated to permit cone 22 to pass beyond raised projections 14. Then, by simply rotating cone 22 less than 180° internal spreader means 20 will be in locked position on rod 12. Then cone 23 is passed over the end of rod 12 adjacent projections 14 so that cone 23 will be mounted in position as illustrated in FIG. 2.

Formed adjacent each end of rod 12 is a pair of parallel notches 18 and 19. These notches form part of the locking assembly for removably mounting the tie rod assembly in fixed position to the forms. Parallel notches 18 and 19 in the embodiment illustrated in FIG. 1 are mounted in a steel holding device such as illustrated in FIG. 11. Such a steel holding device or wedge is easily mounted to a form as illustrated in FIGS. 7 and 8.

Wedge 42 is generally rectangular in shape and is made of a malleable steel. A raised body portion in the form of an incline plane 43 having a longitudinally extending slot 44 is formed therein. At the base of slot 44 an opening 45 is provided for receiving rod 12 or 62 and also to provide an access opening for mounting tie rod coupling means 50 in slot 44. Tie rod coupling means 50 is held in fixed slot 44 by a suitable stop means 52. Thus, tie rod anchoring means 50 is slidable along slot 44 from the junction of the opening 45 to the opposite end of slot 43. The notch 46 provided in tie rod anchoring means 50 has a dimension substantially equal to the mass 17 of rod 12 defining the base surfaces of parallel notches 18 and 19.

The wall 71 defining the parallel notches 18 and 19 and which are formed adjacent each end of the tie rod are arcuately formed. Tie rod coupling means 50 on its upper surface has an arcuate recess 56 formed normal to notch 46. The arcuate recess 56 permits the arcuate wall 71 of the respective parallel notches 18, 19, 65 and 70 to contact tie rod coupling means at any angle with respect to the tie rod passing through the concrete forms "F" illustrated in FIGS. 7 through 9. Also, formed in tie rod coupling means 50 is a recess 57 having dimensions substantially equal to the outside dimensions of camming head 64 of tie rod 62. Formed at the outer lips 48 of notch 46 are camming surfaces so that when wedge 42 is mounted on the form as seen in FIG. 11 tie rod coupling means 50 will automatically

slip over camming head 64 to releasably lock tie rod 62 in fixed position.

Wedge 42 has increased strength due to the construction of tie rod coupling means 50. When tie rod 12 or 62 is mounted in fixed position on the forms as illustrated in FIGS. 7 and 8 the forces exerted by the concrete against tie rod 12 or 62 would tend to shear the ends of the tie rod or tend to deform wedge 42 so that it would fail. However, by providing the tie rod 62 with arcuate wall surfaces 71 the forces exerted on the tie rod are transmitted over the entire mass of tie rod coupling means 50 as illustrated most clearly in FIGS. 11 and 12. It is possible therefore to increase the load of the wedge by providing the structure of tie rod coupling means 50.

FIG. 5 and 6 illustrate another embodiment of a reusable tie assembly 60 for concrete forms capable of being disassembled after use in accordance with the invention herein. Tie assembly 60 comprises tie rod 62 having a flanged head portion 64 formed at end 63 and at the other end 61 is a pair of parallel slots 65. A tubular metal member 68 having a pair of parallel slots 70 is formed at end 69 and at the other end a threaded portion 72 is formed and is adapted to threadably mount internal spreader means 80 thereto. Tubular member 68 is slidably mounted on tie rod 62 so that parallel slots 70 are positioned adjacent the flanged head portion 64. Tubular member 68 is permanently retained on tie rod 62 by forming diametrically opposed projections 66 after tubular member 68 has been slidably mounted on rod 62. Projections 63 are formed similar to projections 14 and 15 of rod 12 as described in FIG. 1. A similar pair of projections 66 are formed and spaced a distance from threaded end 72 of pipe 68 such that when internal spreader means 80 is mounted thereon, as illustrated in FIG. 6, a desired distance for maintaining forms is obtained as illustrated most clearly in FIGS. 7 through 9. Internal spreader means 80 has mounted at one end a frustro conical cone 82 similar in design and formed of similar material to frustro conical cones 22 and 23 of FIG. 1. Embedded in base 81 of cone 82 is threaded nut 83 adapted to receive in threaded engagement threaded end 72 of tubular member 68. At the other end of internal spreader means 80 is a removable frustro conical cone 84 similar in configuration to frustro conical cones 22 and 23 of FIG. 1. Embedded in the base of cone 84 is washer 37' similar to the washer 36 of FIGS. 3 and 4 but preferably without slots. Internal sleeve means 80 includes sleeve 86 and forms a passage for tie rod 62. Sleeve 86 is made of an elastic material such as natural or synthetic rubber.

Illustrated in FIG. 8, tie assembly 60 is mounted in position to forms "F." Also illustrated mounted in position on tie rod 62 is steel wedge 42. Tie rod coupling means 50 is illustrated having the surfaces defining parallel slots 65 mounted therein while at the other end the surfaces defining parallel slots 70 of tubular member 68 are mounted to slot 44 of wedge 42 as illustrated in FIGS. 11 and 12. Tie rod coupling means 50 is provided with a recess 57 which is of a size to receive a portion of camming head 64 of rod 62. The surfaces defining parallel slots 70 slidably engage the surfaces defining longitudinally extending slot 44. Thus, when tie assembly 60 is mounted in position, as shown in FIGS. 8, 11 and 12, tie rod 62 is incapable of lateral movement since the parallel slots 65 and 70 are locked in wedge 42 thereby maintaining forms "F" a predetermined distance defined by the length of internal spreader means 80. Also, by employing the wedge 42, tie assembly 60 does not necessarily require mounting through forms "F" in a position normal to forms "F" but may be skew thereto. This is possible since the surfaces defining parallel slots 65 and 70 are formed having arcuate walls 71' and 72'. Similar arcuate walls are formed in parallel slots 18 and 19 of rod 12. Further, by providing arcuate walls in the parallel slots of the embodiments of FIGS. 1 and 3 and the arcuate recess 56 of tie rod coupling means 50 it is possible to maintain the lateral pressures created by concrete being poured into the space between the forms and to increase the rated load of the wedge without the necessity of increasing the mass of the wedge or tie rod.

In practice, the process for erecting and stripping forms is illustrated in FIGS. 7 through 9. As indicated above, the tie assembly depicted in FIGS. 7 through 9 illustrates the assembly of FIG. 3. Thus, in describing the erection and stripping of forms "F" illustrated in FIGS. 7 through 9 the tie assembly of FIG. 3 will be described. Tie assembly 60 is disassembled by unthreading tubular member 68 from internal spreader means 80 and is removed from tie rod 62. Tie rod 62 is passed through an opening in form "F," then internal spreader means 80 is slidably mounted on tie rod 62 so that only a short distance of tie rod 62 extends beyond removable cone 84 of internal spreader means 80. Then, after all of the tie rods that are to be employed for form "F" are similarly mounted therein the closing form is mounted by manipulating tie rod 62 into corresponding openings of the second form. Tie rod 62 is then mounted in position by the assembly of steel wedge 40 the parallel members or wallers 90 as illustrated in FIG. 8 and as shown in enlarged elevational view of FIGS. 11 and 12. Tie rod 62 is locked in position by mounting the ends of the tie rod as described for FIGS. 11 and 12. Wedge 42 is held in position simply by a wedging action or, for example, by using a nail through the openings 49 provided in wedge 42 as shown in FIG. 10.

After the concrete has been poured, the nails are removed from wedge 42 and the ends of the tie rod 62 are unlocked by simply removing the steel wedge from the forms. Tie rod 62 is released from tie rod coupling means 50 and is retracted to the point where projections 66 of tie rod 62 contact the end of tubular member 68. When tie rod 62 is removed to the point where projection 66 are contacted by tubular member 68, tubular member 68 is unthreaded from the threaded nut 43 embedded in cone 82. Then tie rod 62 together with tubular member 68 is removed. Tie rod 62 is shown removed in FIG. 9 so that only internal spreader means 80 remains embedded in the concrete. Forms "F" are then stripped from the concrete in the usual fashion exposing cones 82 and 84. Also projections 82' and 84' formed on cones 82 and 84 prevent rotation of the cones when removing tie rod 62 as described above. Cone 82 is grasped and by simply stretching elastomeric sleeve 86 the bond holding the elastomeric sleeve in the concrete is broken and is then easily removed therefrom. Then by simply grasping cone 84 embedded on the other side of the concrete it is removed and reassembled as explained above. The passage made by elastomeric sleeve means is plugged in the usual fashion.

It is obvious from the foregoing that a reusable tie assembly has been disclosed and it is easily and quickly disassembled for removal from the concrete after a forming operation and can be reassembled for subsequent reuse. Also, the reusable tie assembly of the invention herein can be mounted in position even though the tie rod is not exactly normal to the surface of the form and the wedge means employed permits mounting the tie rod in fixed position even though it is skewed to the surface of the form.

We claim:

1. A wedge adapted to be mounted to a concrete form and capable of releasably coupling a tie assembly, said wedge comprising a generally rectangular body portion and a central portion thereof being raised to form an incline plane, said incline plane having a slot extending longitudinally thereof; tie rod coupling means slidably mounted in said slot and having means formed thereon for releasably mounting said tie assembly to said wedge.

2. The wedge of claim **1** wherein an opening is formed at the base of the incline plane adapted to receive an end of said tie assembly.

3. The wedge of claim **1** wherein stop means is positioned adjacent one wall of the longitudinally extending slot at the base of the incline plane so as to limit the movement of the tie rod coupling means within said slot.

4. The wedge of claim **3** wherein said stop menas is formed as a raised projection at the base of the incline plane.

5. The wedge of claim **1** wherein the tie rod coupling means comprises a generally rectangular member slidably mounted in said slot and having surfaces extending into the slot which slidably contact the walls defining said slot to prevent substantial rotational and lateral movement thereof.

6. The wedge of claim **5** wherein the generally rectangular member is provided having a notch formed in axial alignment with said longitudinally extending slot and adapted to receive an end of said tie to releasably mount said tie rod to said wedge.

7. The wedge of claim **6** wherein the notch formed in the generally rectangular member also includes a recess for receiving and end of the tie rod assembly.

8. The wedge of claim **6** wherein the surfaces defining the open end of said notch are bevelled to provide camming surfaces so as to permit the rectangular body member to slidably engage the end of the tie rod by force of gravity.

9. The wedge of claim **6** wherein the upper surface of the generally rectangular member is formed having a lateral transverse arcuate recess adapted to engage the arcuate wall formed in the parallel slot adjacent the end of the tie rod.

* * * * *

UNITED STATES PATENT OFFICE
CERTIFICATE OF CORRECTION

PATENT NO. : 3,858,993

DATED : January 7, 1975

INVENTOR(S) : Peter R. Lovisa and Dusan Tausanovitch

It is certified that error appears in the above-identified patent and that said Letters Patent are hereby corrected as shown below:

Column 8, line 13, insert after "tie" --rod--.

Signed and sealed this 17th day of June 1975.

(SEAL)
Attest:

RUTH C. MASON
Attesting Officer

C. MARSHALL DANN
Commissioner of Patents
and Trademarks