REPUBLIC OF SOUTH AFRICA
PATENTS ACT, 1978

FORM P.8
(to be lodged in duplicate)

A&A Ref: **146969**

PUBLICATION PARTICULARS AND ABSTRACT
(Section 32(3)(a) - Regulations 22(1)(g) and 31)

21	01	PATENT APPLICATION NO	22	LODGING DATE	43	ACCEPTANCE DATE
		2/9329		**15 November 2002**		16.2.04

51	INTERNATIONAL CLASSIFICATION	NOT FOR PUBLICATION
	D01F C08J D01D C08L	CLASSIFIED BY: **ISA**

71	FULL NAME(S) OF APPLICANT(S)

Zimmer Aktiengesellschaft

72	FULL NAME(S) OF INVENTOR(S)

ZIKELI, Stefan

ECKER, Friedrich

EARLIEST PRIORITY CLAIMED	COUNTRY		NUMBER		DATE	
	33	**DE**	31	**100 19 660.8**	32	**20 April 2000**

NOTE: The country must be indicated by its International Abbreviation - see schedule 4 of the Regulations

54	TITLE OF INVENTION

Method for spinning a spinning dope and a spinning head

57	ABSTRACT (NOT MORE THAN 150 WORDS)

NUMBER OF SHEETS	49

The sheet(s) containing the abstract is/are attached.

If no classification is furnished, Form P.9 should accompany this form.
The figure of the drawing to which the abstract refers is attached.

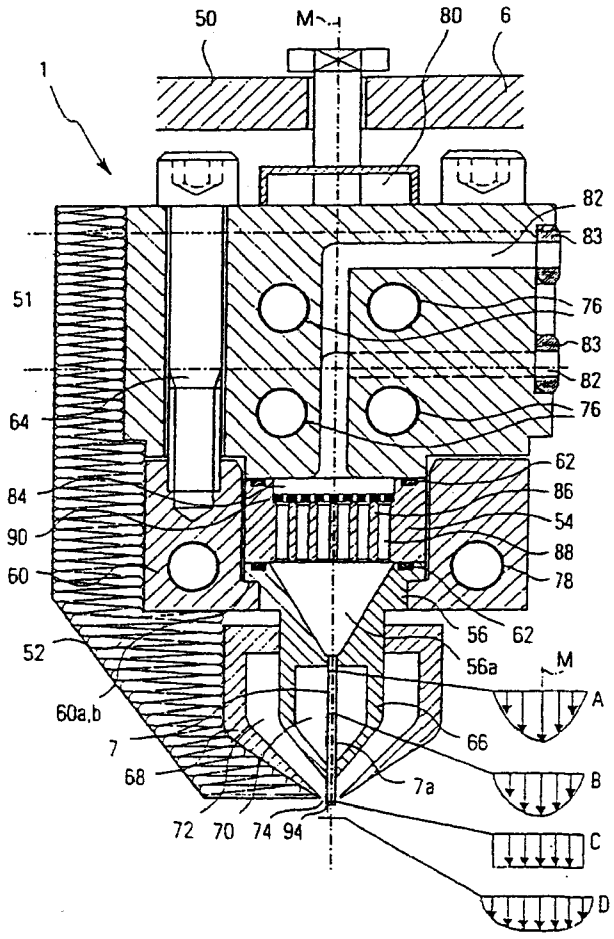

(57) **Abstract:** The invention relates to a spinning head (8) for spinning a spinning solution, having a tubular, thin walled spinning capillary (7) with an outlet (94). A mixture consisting of, for instance, cellulose, tertiary amine oxide and water is used as spinning solution. In order to reduce the tendency to fibrillation of the fibers spun by the spinning head and to enhance loop efficiency, the spinning capillary (7) is directly heated in the vicinity of the cross section of the outlet (94). By implementing this simple measure, tendency to fibrillation can be reduced and loop efficiency can be increased.

Method of spinning a spinning dope and spinning head

The present invention relates to a method of spinning a spinning dope comprising a tertiary amine oxide, water and cellulose, said method comprising the steps of supplying the spinning dope from a spinning-dope storage reservoir to a spinning head continuously or discontinuously and conducting it in said spinning head through at least one spinning capillary provided at its downstream end with a spinning-dope discharge opening through which the spinning dope is discharged from the spinning head.

The present invention additionally relates to a spinning head for spinning a spinning dope flowing through said spinning head and containing tertiary amine oxide, said spinning head comprising at least one spinning capillary having a spinning-dope discharge opening at its downstream end, the spinning dope being discharged from the spinning head through said spinning-dope discharge opening, and further comprising a heating device which acts on said spinning dope.

The term spinning capillary stands here for the last section of the spinning head through which the spinning dope flows and which defines the spinning-dope discharge opening. The spun thread is formed by means of the spinning capillary.

Such a method and such a device are known e.g. from WO 99/47733. In said reference a spinning capillary is described which comprises a pre-capillary (referred to as capillary in said reference) and a spinning capillary following said pre-capillary in the direction of flow of the spinning dope (referred to as orifice in said reference). The pre-capillary and the spinning capillary are produced from a two-part metal block. The diameter of the pre-capillary is 1.2 to 2.5 that of the spinning capillary.

The spinning head of WO 99/47733 is provided with openings in the area of the pre-capillary, said openings being used for accommodating a heating device. Said heating device serves to heat the metal block of the spinning head in the area of the pre-capillary.

The spinning block of WO 99/47733 is surrounded by a gas chamber which contains a heated gas flowing out of the spinning head substantially parallel to the spinning dope dis-

320[illegible]529

charged from the spinning-dope discharge opening and surrounding the discharged spinning dope.

The operating temperature of the spinning head in the area of the pre-capillary and of the spinning capillary ranges from 70°C to 140°C. The temperature of the gas discharged is preferably 70°C, i.e. it is lower than the temperature of the spinning head.

The spinning head according to WO 99/47733 is disadvantageous insofar as, due to the structural design of the spinning head described in said reference, the hole density that can be realized is only low. An additional disadvantage is that the temperature can only be influenced in the area of the pre-capillary. Due to the high cellulose concentrations used when NMO/water/cellulose solutions are spun and due to the high structural viscosity, it is necessary to influence the spinning temperature. In addition, attention should be paid to a good uniformity of the temperature profile, a requirement which is not fulfilled in the case of the spinning nozzle and the heating system described in WO 99/47733.

It follows that, taking into account WO 99/47733, the object to be achieved is to improve the spinning heads according to the generic clause in such a way that the spun fibres have a lower fibrillation tendency and a high non-looping property.

The fibrillation tendency is determined by a so-called "shaking test". The shaking test is described in the periodical "Chemiefaser Textilindustrie" 43/95 (1993), pp. 879 et seq., and in WO 96/07779.

In said test, the fibres, which have a standard length, are shaken in water in the presence of glass beads for a predetermined period of time. The fibrillation degree of the fibre is determined by examination under the microscope: if a large amount of split-off fibrils is found under the microscope, this means that the fibrillation value is high and consequently poor.

For the method mentioned at the start, this object is achieved in accordance with the present invention by the feature that, close to said spinning-dope discharge opening, the wall of the spinning capillary is heated, at least sectionwise, to a temperature which is higher than the core temperature of the spinning dope in the spinning capillary.

Surprisingly enough, it has been found that, due to the influence exerted on the temperature profile of the solution during extrusion through the spinning capillaries, a largely fibrillation-free cellulose fibre with good fibre characteristics, e.g. good non-looping properties, can be produced on the basis of the advantageous flow behaviour.

For the spinning head mentioned at the start, this object is achieved in accordance with the present invention by the feature that, in an area close to the spinning-dope discharge opening, the wall temperature of the spinning capillary is higher than the core temperature of the spinning dope, when the spinning head is in operation.

By means of this simple measure cellulose fibres having a lower fibrillation tendency and a higher non-looping property than prior art fibres can be produced.

In the spinning head according to the most pertinent prior art, WO 99/47733, the pre-capillary is heated, but the spinning capillary extending up to the spinning-dope discharge opening is not heated. The pre-capillary has a larger diameter than the capillary. Due to the sudden change of cross-section between the pre-capillary and the capillary, the temperature distribution in the spinning dope, which has built up in the pre-capillary, is disturbed so that a temperature distribution that is advantageous for spinning the spinning dope can no longer develop over the short length of the capillary.

In addition, the device according to WO 99/47733 does not offer the possibility of heating the capillary wall to a temperature which is higher than the core temperature of the spinning dope. Due to the large travelling length of the pre-capillary and the low flow rate of the spinning dope in the pre-capillary, the spinning dope will heat in the pre-capillary to the temperature of the pre-capillary wall. There are two reasons for the fact that the wall temperature of the capillary of WO 99/47733 is lower than the temperature of the spinning dope:

firstly, the gas discharged from the gas chamber flows through the annular gap along the outer wall of the capillary in the case of the spinning head of WO 99/47733. The temperature of this gas is lower than the temperature of the spinning dope. It follows that, in the case of the device of WO 99/47733, the capillary area close to the discharge opening is actually cooled by the gas to a temperature below the core temperature of the spinning dope.

Secondly, the capillary wall close to the discharge opening is heated only indirectly by the heating device of the spinning head according to WO 99/47733: the heating device is arranged close to the pre-capillary and acts primarily only on said pre-capillary. The downstream capillary is heated only indirectly via the heating of the capillary block. It follows that the wall temperature of the capillary close to the discharge opening will always be lower than the temperature of the pre-capillary in the case of the spinning head according to WO 99/47733.

In accordance with a particularly advantageous embodiment of the present invention, the wall of the spinning capillary can be heated directly by a heating device. In the case of direct heating, the heating device acts directly on the spinning-capillary wall. Such direct heating does not exist in the case of a conventional spinning head of the type disclosed in WO 99/47733. In the case of this spinning head, the spinning-capillary wall is heated indirectly via the great mass of the spinning block. Direct heating of the spinning-capillary wall has, however, the advantage that the temperature of the wall can be controlled more exactly and with faster response, since great inertial masses, which can react only slowly to temperature variations, do not exist.

For adjusting the wall temperature of the spinning capillary precisely and for controlling the process exactly, a temperature controller by means of which the wall temperature of the spinning capillary is controlled to an adjustable value can be provided in accordance with a further advantageous embodiment. Such a temperature controller permits the wall temperature to be adapted automatically to variations in the spinning process, e.g. to different spinning dopes or different spinning-head geometries.

According to one embodiment, the wall temperature of the spinning capillary can be controlled in dependence upon the mass flow rate of the spinning dope through the spinning capillary. The heat transfer from the capillary wall increases in response to the mass flow rate so that the heating of the capillary wall must be adapted accordingly. In this connection, it will be advantageous when variations in the mass flow rate through the spinning capillary can be compensated for by controlling the wall temperature.

According to a further advantageous embodiment, the wall temperature of the spinning capillary can also be controlled in dependence upon the spinning pressure in the spinning dope, preferably in dependence upon the spinning pressure of the spinning dope in the capillary. The flow velocity and, consequently, the heat transfer in the spinning dope also depends on the spinning pressure and thus on the flow velocity in the spinning dope: the flow velocity of the spinning dope through the spinning capillary increases as the spinning pressure increases. Also in this case, it will be advantageous when variations in the spinning pressure can be compensated for by controlling the wall temperature of the spinning capillary.

The fibrillation tendency can especially be reduced, when, in accordance with a further advantageous embodiment, the heating of the spinning-capillary wall produces a predetermined temperature profile across the flow cross-section of the spinning capillary when the spinning head is in operation. By means of this temperature profile, the velocity profile of the spinning dope in the spinning capillary is purposefully influenced on the basis of the temperature-dependent viscosity of the spinning dope. Especially when the capillary wall is heated strongly, it will be possible to reduce the viscosity of the spinning dope in the wall area to a substantial extent. Such heating will lead to a reduced wall friction in the spinning dope and to a fuller/wider flow profile in the capillary: the distribution of the flow velocity over the flow cross-section no longer has the strongly curved profile of a pipe flow, but it has a broad maximum which extends in an almost constant form up to the wall of the spinning capillary. The fibrillation tendency can be improved in this way by influencing the flow profile via the wall temperature.

This effect of the wall temperature on the flow profile of the spinning dope in the spinning capillary can be increased still further in accordance with an advantageous embodiment, when a predetermined temperature profile of the spinning-capillary wall can also be adjusted in the direction of flow of the spinning dope by heating the spinning-capillary wall when the spinning head is in operation. In the case of this embodiment the velocity profile in the spinning capillary is influenced by purposefully changing the temperature distribution in the direction of flow. The formation of a pipe flow profile is reliably avoided and the flow profile can be optimized still further by adapting the temperature distribution in the direction of flow.

For this purpose, a plurality of independently operating heating devices can be provided on the spinning capillary in the direction of flow.

A particularly uniform heating of the spinning-capillary wall can be achieved when a heated heating fluid flows around the wall of the spinning capillary on the outside thereof. In contrast to electric heating – of the type described e.g. in WO 99/47733 – abrupt changes in the spatial temperature distribution will not occur in the case of heating by means of a fluid. In addition, local overheating can be avoided. The temperature of the heating fluid is at least 100°C, preferably approximately 150°C. The temperature of the heating fluid can, in an advantageous manner, also be in the range of 50°C, 80°C or 100°C and 150°C or 180°C. Due to the high flow velocities in the end capillary of the spinning head, the wall temperature of the spinning capillary can even exceed the decomposition temperature of the spinning dope. The residence time of the spinning dope in the spinning capillary is not long enough for the spinning dope to reach the decomposition temperature.

In accordance with a further embodiment, at least one temperature sensor can be provided for detecting the temperature of the capillary wall and/or the temperature of the spinning dope in the area of said capillary wall. The temperature sensor is adapted to output an electric signal which is representative of the capillary-wall temperature. With the aid of such a sensor, the temperature of the capillary wall can be determined directly or indirectly at any time. The signal can be supplied to a control device by means of which the wall temperature can be controlled. For this purpose, the temperature controller will change the temperature of the heating fluid in a suitable manner.

When a heating fluid is used, at least one temperature sensor can be provided in accordance with a further advantageous embodiment, said temperature sensor being used for detecting the temperature of the heating fluid and for outputting said temperature of the heating fluid to the control device in the form of an electric signal. In the case of this embodiment, the wall temperature of the spinning capillary can be determined and controlled via the detection of the heating fluid temperature.

As far as the spinning head is concerned, it may be particularly advantageous when the area of the spinning-capillary wall which is heated by the heating device and the temperature of which is higher than the core temperature of the spinning dope extends essentially

up to the spinning-dope discharge opening. The spinning-dope discharge opening is a particularly critical point at which a high wall temperature will influence the fibrillation tendency in a particularly advantageous manner. Especially, it turned out that the jet expansion immediately after the discharge of the spinning dope from the discharge opening, the so-called strand expansion, can be suppressed by heating the discharge opening. This will result in an improved surface structure of the spun fibres and, consequently, the non-looping property will be increased still further and the fibrillation tendency will be reduced still further.

According to a further advantageous embodiment, the area of the spinning-capillary wall which is heated by the heating device and the temperature of which is higher than the core temperature of the spinning dope can extend essentially over the whole length of the spinning capillary. In the case of this embodiment, the whole spinning capillary can be heated; due to the reduced viscosity of the spinning dope in the vicinity of the wall and due to the travelling length in the spinning capillary, this will lead to the complete formation of a full velocity profile over the cross-section of the spinning capillary.

In order to permit a rapid and purposeful control of the wall temperature and thus of the temperature of the spinning dope flowing close to the wall, the temperature of the spinning-capillary wall should be rapidly adjustable by the heating device and it should rapidly react to temperature variations. In accordance with a further embodiment, this can be achieved by the features that the spinning capillary is implemented as a spinning-capillary tube in the form of a substantially thin-walled tube, and that the heating device acts directly on the wall area of said spinning-capillary tube close to the spinning-dope discharge opening. Due to the thin-walled structural design of the spinning capillary, the wall temperature will react rapidly in response to a change of the temperature of the heating device, since there is hardly any inertial mass. In view of the fact that the heating device acts directly on the thin-walled spinning capillary, a rapid response will additionally be guaranteed. It will be advantageous when the wall thickness of the spinning-capillary tube is less than 200 μm, preferably less than 150 μm.

In accordance with a further embodiment the spinning-dope discharge opening of the spinning-capillary tube can be surrounded, at least sectionwise, by a gap opening, a transport

2002/9329

fluid flowing out of said gap opening essentially in the direction of the spinning dope discharged from the spinning-dope discharge opening when the spinning head is in operation. The transport fluid surrounds the spinning-dope jet discharged from the discharge opening of the spinning capillary and reduces the abrupt change of velocity at the outer surface of the jet. This has the effect that the jet is stabilized and that the flow on said outer surface calms down. The velocity of the transport fluid flowing out of the gap opening when the spinning head is in operation can correspond substantially to the velocity of the spinning dope discharged from the spinning-dope discharge opening.

One embodiment of the spinning head is so conceived that, close to the spinning-dope discharge opening, the spinning-capillary tube is surrounded by a heating chamber containing a heating fluid. It will be particularly advantageous when the heating chamber communicates with the gap opening. This permits the heating fluid to flow through the gap opening and to sweep over the area of the spinning-capillary wall which is located in the vicinity of the discharge cross-section. The spinning-capillary wall can be heated up to the discharge cross-section in this way.

When the heating fluid is discharged from said gap opening at a suitable velocity, it can simultaneously serve as transport fluid. Hence, it will not be necessary to provide a separate transport fluid for stabilizing the spinning-dope jet.

For the formation of a stabile and full flow profile, the travelling length in the spinning capillary should be as long as possible. The ratio of the spinning-capillary length to the spinning-capillary diameter should therefore be as large as possible. In accordance with an advantageous embodiment of the spinning capillary, the length of the spinning capillary can be at least 20 times to 150 times as long as the diameter of said spinning capillary. The length taken into account in this ratio can be the length through which the spinning dope flows and/or the diameter can be the internal diameter of the spinning capillary.

The flow cross-section of the gap through which the fluid is discharged parallel to the spinning dope can be varied by means of a displaceable housing, e.g. displaceable wings, in accordance with a further advantageous embodiment. The velocity of the fluid discharged from the gap can thus be varied depending on the respective spinning operation and the respective spinning jet velocity and thickness.

The spinning capillary can also be heated directly by means of an electric heating element surrounding said spinning capillary.

In accordance with a further advantageous embodiment, the spinning capillary can be implemented as a precision steel tube. It may also have a circular discharge opening. The diameter of the discharge opening can be less than 500 μm, preferably less than 250 μm. For special cases of use, e.g. for spinning spinning material so as to produce lyocell fibres, the diameter may also be in the range of less than 100 μm to 75μm.

The spinning head can be installed in a spinning system with a pressure equalizing container containing a spinning dope with tertiary amine oxide, said spinning system comprising a spinning head by means of which the spinning dope can be spun so as to produce a spinning filament, and further comprising a spinning-dope conduit through which the spinning dope is conducted to a spinning head. This spinning system then executes the method according to the present invention.

The present invention also relates to the product produced by the method according to the present invention, the spinning head according to the present invention or the spinning system according to the present invention; said product is characterized by an improved non-looping property and by a lower fibrillation tendency and it can have the form of a filament, a staple fibre, a spunbonded fabric or a film/sheet.

In the following, the structural design and the mode of operation of the method according to the present invention and of the spinning head according to the present invention are explained on the basis of embodiments.

Fig. 1 shows a schematic view of a spinning system;

Fig. 2 shows a first embodiment of the spinning head according to the present invention in a cross-sectional view;

Fig. 3 shows a second embodiment of the spinning head according to the present invention

in a cross-sectional view;

Fig. 4 shows a third embodiment of the spinning head according to the present invention in a cross-sectional view;

Fig. 5 shows a fourth embodiment of a spinning head according to the present invention in a cross-sectional view.

A spinning system 1 by means of which the method according to the present invention is carried out is schematically shown in Fig. 1.

A spinning dope storage reservoir or reactor 2 contains a highly viscous spinning dope 3 including a tertiary amine oxide, e.g. a solution of cellulose, water and N-methylmorpholine-N-oxide (NMMO).

The spinning dope is conveyed by means of a pump 4 from the spinning dope reservoir 2 through a spinning dope conduit 4' and a pressure equalizing container 5 to a manifold/distributor block 6. The manifold block has connected thereto a large number of spinning capillaries 7. The manifold block 6 and the spinning capillaries 7 are part of a spinning head 8.

The pressure equalizing container serves to equalize possible pressure and/or volumetric flow rate variations in the spinning dope conduit 4' and to guarantee a uniform supply of spinning dope to the spinning head 8.

Highly viscous spinning dope jets 9 are discharged, each at a high velocity, from the spinning head 8. After having been discharged from the spinning head 8, these spinning dope jets 9 flow through an air gap 10 or a non-precipitative medium. In this step, the spinning dope is accelerated and, consequently, drawn.

The spinning dope jets then enter a precipitation bath 11 or a bath comprising a non-solvent or an aqueous amine oxide solution. From said precipitation bath 11, the spinning dope is drawn off in the form of a fibre by means of a drawing-off device 12.

In the following, the structural design of a first embodiment of the spinning head 8 according to the present invention is described on the basis of Fig. 2.

The spinning head 8 is secured to a frame 50 and insulated by a layer 52 of heat-insulating material so that no heat losses will occur when the spinning head is heated.

The spinning head 8 has a modular structural design comprising the manifold block 6, a substantially disk- or plate-shaped pressure distributing plate 54, a substantially disk- or plate-shaped spinning nozzle body 56 provided with a distributor space 56a, at least one spinning capillary 7 and a holding device 60.

The pressure distributing plate 54 of the spinning nozzle body 56 is held by means of said holding device 60 on the manifold block 6 in the direction of a central axis M of the spinning head. For this purpose, the holding device 60 defines an annular or slot-shaped opening in which the pressure distributing plate 54 and the spinning nozzle body 56 are accommodated. A shoulder 60a is formed on one end of the annular opening, said shoulder engaging a complementary opening 60b of the spinning nozzle body 56.

The spinning nozzle body 56 rests via one of its end faces on the pressure distributing plate 54 essentially in full-area contact therewith. A sealing element 62 is provided in the end face of said nozzle body 56 so that no spinning dope can escape between said pressure distributing plate 54 and said spinning nozzle body 56.

The end face of the pressure distributing plate 54 facing away from the spinning nozzle body 56 abuts on the manifold block 6 essentially in full-area contact therewith. Also this end face has a sealing element 62 provided therein so that no spinning dope can escape between the manifold block 6 and the pressure distributing plate.

By screw means 64 engaging the holding device 60, said holding device 60 is drawn towards the manifold block 6. The shoulder 60a of the holding device 60 thus applies a pressure to the respective opening 60b of the nozzle body 56. The nozzle body 56 retransmits this pressure via the pressure distributing plate 54 to the manifold block 6. In this way, the pressure distributing plate 54 and the nozzle body 56 are fixedly and sealingly held on the

manifold block 6 and can also be exchanged easily by releasing the screw means 64 for the purpose of maintenance or for replacing it by other geometries.

The spinning capillary 7 is secured to the spinning nozzle body 56. The spinning capillary is implemented in the form of a tube having a circular cross-section and an internal diameter of less than 500 μm.

The internal diameter of the spinning capillaries 7 is constant over the whole length of said spinning capillaries.

The tubes used for the spinning capillaries 7 are precision steel tubes originating from the field of medical engineering whose internal diameter is less than 500 μm, partly also less than 250 μm. In particular for lyocell fibres, it would also be possible to provide an internal diameter of less than 100 μm down to less than 50 μm.

The spinning capillary 7 is thin-walled and has a maximum wall thickness of 200 μm. The length of the spinning capillary is at least 20 times, preferably at least 150 times as long as the internal diameter. Tests have shown that the fibrillation tendency of the fibres decreases as the length/internal-diameter ratio of the spinning capillaries increases.

Normally, a multitude of spinning capillaries 7 is arranged on the spinning head 8 side by side or in a plurality of rows displaced relative to one another. As can be seen in Fig. 1, a plurality of the above-described spinning heads can be arranged in an arbitrary mode of arrangement so as to define an economical production unit. Each nozzle body 56 comprises a plurality of spinning capillaries 7 arranged in one row or in several rows, in an elongate or annular configuration.

In order to ensure a uniform onflow to the capillaries 7, the distributor space 56a is implemented as a V-groove in an elongate or annular shape, as a single groove or as a multi-row V-groove. The pressure distributing plate 54 is located above the distributor space 56a implemented as a V-groove.

The spinning capillary 7 is surrounded by an inner housing 66 and an outer housing 68.

The inner housing 66 defines together with the outer surface 7a of the spinning capillary a heating chamber 70 which is closed towards the outside and through which a heating fluid flows. The inner housing 66 and the nozzle body 56 define a unit. An outer housing 68 follows the unit consisting of the nozzle body 56 and of the inner housing 66. The spinning capillary 7 slightly projects beyond said inner housing 66 and said outer housing 68.

The outer housing 68 surrounds the inner housing 66 and defines a further heating chamber 72 with the outer surface of said inner housing 66; in contrast to the heating chamber 70, said heating chamber 72 is, however, open towards the outside. The heating chamber 72 defines a gap 74 surrounding the end of the spinning capillary 7 which is arranged opposite the spinning head. A heating fluid flows through this heating chamber 72 as well, said heating fluid flowing out through the gap and substantially parallel to the central axis M.

In order to change the geometry of the gap 74, the outer housing 68 is supported on the inner housing 66 such that it is displaceable in the direction of the central axis M.

In the embodiment according to Fig. 2, the same kind of heating fluid can be used for both chambers 70, 72. This heating fluid is a gas which is inert with respect to the spinning dope and which can be heated to 150°C, e.g. via a heat exchanger (not shown here). Alternatively, different kinds of heating fluids can also be used for the chambers 70, 72. The heating chamber 70 defines the heating device for the spinning capillary 7.

The manifold block 6 and the holding device 60 are implemented as substantially massive blocks of great mass and they are provided with heating channels 76, 78, 80 for hot water, hot air, heat-transfer oil, vapour or, optionally, with rod-shaped heating elements. Due to the great mass of said manifold block 6 and of said holding device 60 and due to the thermal insulation, only minor variations will occur in the operating temperatures of said manifold block 6 and of said holding device 60.

In the following, the function of the spinning block according to the present invention is described.

The spinning dope flows through the manifold block 6 via a supply line 82, which is connected to the spinning dope supply via sealing means 83, into a stabilizing chamber 84 provided with a perforated disk or plate 86 having flow openings 88 formed therein. The stabilizing chamber 84 and the perforated disk 86 are formed by the pressure distributing plate 54. A filtration unit 90 is located in front of the perforated disk 86 when seen in the direction of flow. The stabilizing chamber 84, the perforated disk 86 and the filtration unit 90 extend over all the spinning capillaries 7.

By means of the flow cross-section of the stabilizing chamber 84, which is enlarged to a great extent in comparison with the supply line 82, the flow velocity of the spinning dope is reduced and the flow is rendered more uniform. The spinning dope additionally flows through the filtration unit 90 and the openings 88 of the pressure distributing plate 54, whereby the flow and pressure profile will be rendered still more uniform across the flow cross-section and all capillaries 7 will be supplied uniformly.

From the stabilizing chamber 84 the spinning dope flows in the spinning head 8 through the pressure distributing plate 54 and into the distributor space 56a defined by the spinning nozzle body 56. In the distributor space 56a the flow cross-section gradually decreases in the direction of flow. This has the effect that the spinning dope is accelerated and that the flow cross-section is also gradually reduced to the flow cross-section of the spinning capillaries 7.

The distributor space 56a is followed by the spinning capillaries 7 when seen in the direction of flow, said spinning capillaries 7 terminating in spinning-dope discharge openings 94 in said direction of flow. The spinning dope is discharged from the spinning head through said spinning-dope discharge openings 94 at a high velocity and at a high mass flow rate, respectively. A typical mass flow rate per spinning capillary is 0.03 to 0.5 g/min. Higher flow rates up to 1.5 g/min are possible in the case of higher heating temperatures of the spinning capillaries. The pressure of the spinning dope can be up to 400 bar.

For operating the spinning head 8, it is important that the spinning dope is maintained at the operating temperature when it flows through said spinning head. For this purpose, the heating channels 76, 78 and 80, which have already been mentioned briefly hereinbefore, are provided in the manifold block 6 and in the holding device 60.

The manifold-block heating channels 76 are arranged in the vicinity of the supply line 82 and maintain the spinning dope in said supply line 82 at operating temperature. A heating fluid, such as hot water, a heat-transfer oil or vapour, flows through the heating channels 76.

The heating channel 78 is arranged in the area of the holding device 60 so far down that it will heat the distributor space 56a already before the spinning material enters the capillary 7. A heating fluid, such as hot air, hot water, a heat-transfer oil or vapour, also flows through the heating element 78.

Optionally, also a second manifold-block heating element 80 may be provided, which is attached to the spinning head section located opposite the spinning-dope discharge opening 94. In the embodiment according to Fig. 2, the manifold-block heating element 80 serves to heat the upstream part of the supply line 82.

The heating channels 76, 78, 80 may be connected to a common heating circuit or they may define separate heating circuits. The heating circuits of the heating channels 76, 78, 80 may also be connected to the heating chamber.

In the first embodiment, cf. Fig. 2, the fibrillation tendency is reduced by the fact that the spinning capillary 7 is heated from outside in the area of the discharge opening 94. This is achieved in that the heating fluid in the heating chamber 70 flows around the outer surface of the spinning capillary 7 thus heating said spinning capillary 7 directly. Due to the fact that the spinning capillary 7 has thin walls and a large outer surface in view of its length, a high heat transfer takes place from the heating fluid via the spinning-capillary wall to the spinning dope. In order to achieve the best possible heating of the spinning-capillary wall, the contact surface between the heating fluid and the outer wall of the spinning capillary should be as large as possible.

Since the spinning dope flows in the spinning capillary at a high velocity, the temperature of the heating fluid may also safely exceed the decomposition temperature of the spinning dope: due to the high velocity at which the spinning dope flows along the heated wall, the

residence time of the spinning dope in the capillary will not be long enough for the spinning dope to reach the wall temperature of the capillary.

Surprisingly enough, it turned out that even at wall temperatures of approx. 150°C it was possible to spin fibres which have a very low fibrillation tendency. The fibrillation tendency was even lower and the non-looping property higher than in the case of a wall temperature of 105 °C.

Due to the great length of the spinning capillary, it is guaranteed that the spinning-dope layer flowing close to the wall will heat. Since, in the case of conventional spinning dopes, the viscosity increases as the temperature decreases, the viscosity of the spinning dope flowing through the spinning capillary 7 will be reduced in the area close to the wall. It follows that a fuller velocity profile can be obtained in the core flow over the great travelling length of the spinning capillary 7 which is heated in full length.

The formation of the velocity profile along the spinning capillary 7 is schematically explained in Fig. 2 on the basis of four velocity profiles A, B, C and D. Velocity profile A comes into being a short distance behind the distributor space 56a and is characterized by a narrow maximum in the area of the core flow close to the centre line M. Said velocity profile A drops steeply towards the walls of the spinning capillary 7.

Due to the fact that the spinning-capillary wall is heated, the viscosity of the spinning dope decreases in the wall area, the velocity profile becomes increasingly uniform and the velocity maximum increases in width. This is schematically shown in velocity profile B.

In the spinning-dope discharge opening 94, the velocity distribution in the core flow is almost constant and drops steeply towards the walls. This is shown by velocity profile C. The steep drop in the wall area is possible due to the low viscosity and the strong heating of the spinning-capillary wall up to the discharge opening 94.

Velocity profile D shows schematically a velocity profile after the discharge of the spinning dope from the discharge opening 94. The inert fluid from chamber 72 and the spinning dope from the discharge opening 94 form together a broad jet.

It follows that, according to the present invention, the capillary length, which is very long in comparison with the capillary diameter, and the direct heating of said capillary co-operate and result in an advantageous velocity profile. An important aspect in this connection is that the temperature of the spinning-capillary wall is higher than the temperature of the core of the spinning-dope flow in the middle of the spinning capillary. The temperature in the core of the spinning-dope flow through the capillary 7 corresponds approximately to the operating temperature of the manifold block 6 and of the holding device 60 with the pressure distributing plate 54 and the nozzle body 56 accommodated therein, said operating temperature being adjusted by the heating channels 76, 78, 80. When flowing through the spinning capillary, the core flow remains uninfluenced and does not change its temperature.

Due to the small wall thickness of the capillary 7, the temperature of the spinning-capillary wall 7 can, moreover, be controlled precisely and with a fast response: due to the small mass of the spinning-capillary wall, the wall temperature will react immediately to temperature variations in the heating chamber 70.

For purposefully adjusting the wall temperature and for purposefully influencing the flow through the capillaries 7 in this way, a control device (not shown) may be provided. The control device is connected to sensors (not shown), which detect the temperature of the capillary wall and/or of the heating fluid in the heating chamber 70, the flow velocity of the spinning dope through the capillaries and the operating pressure of the spinning dope. In this way, a closed-loop control circuit can be established by means of which the temperature of the wall can be adapted to varying operating conditions automatically or by control from outside. Hence, variations of the operating parameters can be compensated for without any deterioration of the spinning quality.

Tests have shown that the fibrillation tendency can be reduced to a decisive extent when the wall of the spinning capillary 7 is heated also in the area of the discharge opening 94.

For this purpose, the heating fluid is conducted from the heating chamber 72 through the gap 74 past the outer wall of the spinning capillary 7 and out of the spinning head 8 in the embodiment according to Fig. 2. This will guarantee that the spinning capillary is actually heated over its whole length and that the fuller flow profile developing over the length of the spinning capillary 7 cannot recede due to a colder wall at the end of the travelling length.

The fluid flows out of the gap 74 at a high velocity which corresponds at least to the velocity at which the spinning dope is discharged from the discharge opening 94. It follows that the fluid also acts as a transport fluid which entrains and stabilizes the spinning-dope jet.

If the discharge velocity of the fluid is higher than the velocity of the spinning dope, a tensile stress will act on the edge of the spinning-dope jet, which will stretch the highly viscous jet.

Like the fluid in the heating chamber 70, also the fluid in the heating chamber 72 may be part of a closed-loop control circuit for the wall temperature of the spinning capillary 7. For this purpose, a large number of sensors for detecting the operating parameters of the spinning system as well as sensors for detecting the temperature of the spinning-capillary wall and of the heating fluid may be provided, as has been described hereinbefore. The signals of these sensors are supplied to a temperature controller by means of which the temperature of the heating fluid in the heating chamber 70 is controlled.

Due to the division into two heating chambers 70, 72, the temperatures of the two heating fluids in these chambers can be adjusted differently. In this connection, it proved to be advantageous when the spinning-capillary wall close to the discharge opening 94 is maintained at a higher temperature than the middle area of the spinning capillary. This measure serves to suppress the above-described strand expansion.

By subdividing the chamber 70 into further heating chambers which are independent of one another, the temperature profile along the spinning capillary can be controlled even more precisely in the direction of flow of the spinning dope according to a further embodiment, especially in cases in which said capillary is very long. Each of these chambers can be provided with separate sensors.

In the following, the structural design of the second embodiment will be explained making reference to Fig. 3.

In so doing, only the differences existing in comparison with the first embodiment will be explained. Identical components or similar components having the same function as the

components of the first embodiment are provided with the same reference numerals in Fig. 3.

The second embodiment according to Fig. 3 substantially differs with respect to the structural design of the heating chamber 70: the embodiment of Fig. 3 has in the area of the spinning capillaries only a single heating chamber 70 which extends up to the discharge opening 94 of the individual spinning capillary 7 and which defines the gap 74. Each spinning capillary 7 may have a heating chamber 70 of its own, but a plurality of spinning capillaries 7 may also be combined in one heating chamber 70. Neither a second chamber 72 nor a second housing 68 is provided.

In the embodiment according to Fig. 3, the heating chamber 70 is provided with a tube 100 having a circular or oval shape which surrounds the outer surfaces of the spinning capillary and which defines an annular space 102 between the spinning capillary 7 and the housing 66. The annular space 102 opens as an annular gap 74.

The heating fluid in the annular space 102 heats the whole outer wall of the spinning capillary 7 up to the discharge opening 94. The heating fluid is therefore part of a heating device which acts directly onto the spinning-capillary wall and which can be used for purposefully controlling the wall temperature.

The tube 100 is produced from a precision steel tube.

The heating fluid flows out of the annular space 102 parallel and coaxially to the spinning-dope jet discharged from spinning-dope discharge opening. This permits calm conducting of the spinning-dope jet.

In the following, the third embodiment of the spinning head according to the present invention will be explained making reference to Fig. 4.

In so doing, only the differences existing in comparison with the second embodiment will be discussed. Components of the third embodiment which are equal to and/or which have the same function as those of the second embodiment are provided in Fig. 4 with the same reference numerals which have been used in Fig. 1.

The embodiment of Fig. 4 differs from the second embodiment insofar as the gap 74 defined by the housing 66 has not an annular but an elongate shape. The housing 66 can be implemented in one part or it may have two wings 104a, 104b which are adapted to be displaced at right angles to the centre line M. The width of the gap 74 can be adjusted by displacing the wings in the direction of the arrows shown in Fig. 4.

In the following, the fourth embodiment of the spinning head according to the present invention will be explained making reference to Fig. 5.

In so doing, only the differences existing in comparison with the second embodiment will be discussed. Components of the fourth embodiment which are equal to and/or which have the same function as those of the second embodiment are provided in Fig. 5 with the same reference numerals which have been used in Fig. 1.

In the case of the spinning head according to the fourth embodiment, a heating chamber is no longer provided. The spinning capillary is no longer heated via a heating fluid, but via an electric heating jacket 110 which is part of the heating device of the spinning head.

The heating jacket 110 may also be part of a closed-loop control circuit for controlling the temperature of the spinning-capillary wall; this type of closed-loop control circuit has been described hereinbefore.

In order to achieve a precise control of the temperature profile along the length of the spinning capillary, the heating jacket may be subdivided into a plurality of independently operating heating-jacket segments.

Claims

1. A method of spinning a spinning dope comprising a mixture of cellulose, water and tertiary amine oxide, said method comprising the steps of supplying the spinning dope to at least one spinning head and conducting it in said spinning head through at least one spinning capillary provided at its downstream end with a spinning-dope discharge opening through which the spinning dope is discharged from the spinning head, **characterized in that**, close to said spinning-dope discharge opening, the wall of the spinning capillary is heated, at least sectionwise, to a temperature which is higher than the core temperature of the spinning dope in the spinning capillary.

2. A method according to claim 1, **characterized in that** the wall of the spinning capillary is heated directly by a heating device.

3. A method according to claim 1 or 2, **characterized in that** the wall temperature of the spinning capillary is controlled to an adjustable value by means of a temperature controller.

4. A method according to one of the above-mentioned claims, **characterized in that** the wall temperature of the spinning capillary is controlled in dependence upon the mass flow rate of the spinning dope through the spinning capillary.

5. A method according to one of the above-mentioned claims, **characterized in that** the wall temperature of the spinning capillary is controlled in dependence upon the spinning pressure in the spinning dope, preferably in dependence upon the spinning pressure of the spinning dope in the spinning capillary.

6. A method according to one of the above-mentioned claims, **characterized in that,** a predetermined temperature profile across the flow cross-section of the spinning capillary is adjusted by heating the spinning-capillary wall when the spinning capillary is in operation.

7. A method according to one of the above-mentioned claims, **characterized in that**, a predetermined temperature profile of the spinning-capillary wall is adjusted in the direction of flow of the spinning dope by heating the spinning-capillary wall when the spinning capillary is in operation.

8. A method according to one of the above-mentioned claims, **characterized in that** the spinning-capillary wall is heated by a heating fluid which flows around the wall of the spinning capillary on the outside thereof.

9. A spinning head for spinning a spinning dope which consists of a mixture of cellulose, water and tertiary amine oxide and which flows through the spinning head, comprising at least one spinning capillary having a spinning-dope discharge opening at its downstream end, the spinning dope being discharged from the spinning head through said spinning-dope discharge opening, and further comprising a temperature-controlled heating device which acts on said spinning-dope, **characterized in that,** in an area close to the spinning-dope discharge opening, the wall temperature of the spinning capillary produced by the heating device is higher than the core temperature of the spinning dope, when the spinning head is in operation.

10. A spinning head according to claim 9, **characterized in that** the area of the spinning capillary wall which is heated by said heating device and the temperature of which is higher than the core temperature of the spinning dope

extends essentially up to the spinning-dope discharge opening.

11. A spinning head according to claim 9 or 10, **characterized in that** the area of the the spinning-capillary wall which is heated by said heating device and the temperature of which is higher than the core temperature of the spinning dope extends essentially over the whole length of the spinning capillary.

12. A spinning head according to one of the claims 9 to 11, **characterized in that** the spinning capillary is implemented as a spinning-capillary tube in the form of a substantially thin-walled tube, and the heating device acts directly on the wall area of said spinning-capillary tube close to the spinning-dope discharge opening.

13. A spinning head according to one of the claims 9 to 12, **characterized in that** a control unit is provided, which acts on the heating device and by means of which the temperature of the directly heated wall area of the spinning-capillary tube is adapted to be controlled, at least sectionwise.

14. A spinning head according to one of the claims 9 to 13, **characterized in that** the heating device comprises a heating fluid which surrounds the spinning-capillary tube, at least sectionwise.

15. A spinning head according to claim 14, **characterized in that** the heating fluid of the heating device surrounds the spinning-capillary tube, at least sectionwise.

16. A spinning head according to one of the claims 9 to 15, **characterized in that** the spinning-dope discharge opening of the spinning-capillary tube is

surrounded, at least sectionwise, by a gap opening, a transport fluid flowing out of said gap opening essentially in the direction of the spinning dope discharged from the spinning-dope discharge opening when the spinning head is in operation.

17. A spinning head according to claim 16, **characterized in that** the velocity of the transport fluid flowing out of said gap opening when the spinning head is in operation corresponds substantially at least to the velocity of the spinning dope discharged from the spinning-dope discharge opening.

18. A spinning head according to one of the claims 9 to 17, **characterized in that,** close to the spinning-dope discharge opening, the spinning-capillary tube is surrounded by a heating chamber containing a heating fluid.

19. A spinning head according to one of the claims 16 to 18, **characterized in that** the heating chamber communicates with the gap opening.

20. A spinning head according to one of the claims 16 to 19, **characterized in that** the heating fluid serves as a transport fluid and is conducted from the heating chamber through the gap opening.

21. A spinning head according to one of the claims 16 to 20, **characterized in that** an annular space extends between said heating chamber and said gap opening, said annular space surrounding the capillary tube from outside essentially along the whole length of said tube.

22. A spinning head according to claim 20, **characterized in that** the annular space has a substantially oval cross-section.

23. A spinning head according to one of the claims 9 to 21, **characterized in that** the length of the spinning capillary is 20 to 150 times as long as the diameter of said spinning capillary.

24. A spinning head according to claim 23, **characterized in that** said length is the length through which the spinning dope flows and/or that said diameter is the internal diameter of the spinning capillary.

25. A spinning head according to one of the claims 9 to 24, **characterized in that** the discharge cross-section is circular.

26. A spinning head according to claim 25, **characterized in that** the discharge cross-section has a diameter of less than 500 μm, preferably less than 250 μm.

27. A spinning head according to one of the claims 9 to 26, **characterized in that** the wall thickness of the spinning-capillary tube is less than 200 μm, preferably less than 150 μm.

28. A spinning head according to one of the claims 9 to 27, **characterized in that** the temperature of the heating fluid in the heating chamber is at least 100°C, preferably approximately 150°C.

29. A spinning head according to one of the claims 9 to 27, **characterized in that** the temperature of the heating fluid in the heating chamber ranges from 50°C to 150°C.

30. A spinning head according to one of the claims 9 to 27, **characterized in that** the temperature of the heating fluid in the heating chamber ranges from 80°C

to 150°C.

31. A spinning head according to one of the claims 9 to 27, **characterized in that** the temperature of the heating fluid in the heating chamber ranges from 100°C to 150°C.

32. A spinning head according to one of the claims 9 to 27, **characterized in that** the temperature of the heating fluid in the heating chamber ranges from 50°C to 180°C.

33. A spinning head according to one of claims 9 to 32, **characterized in that** at least on temperature sensor is provided for detecting the temperature of the capillary wall and/or the temperature of the spinning dope in the area of said capillary wall, the capillary-wall temperature being adapted to be outputted to the control device in the form of an electric signal by means of said temperature sensor.

34. A spinning head according to claim 33, **characterized in that** the temperature sensor is implemented as an electric resistance element.

35. A spinning head according to one of the claims 9 to 34, **characterized in that** at least one temperature sensor is provided for detecting the temperature of the heating fluid, the temperature of the heating fluid being adapted to be outputted to the control device in the form of an electric signal by means of said temperature sensor.

36. A spinning head according to one of the claims 9 to 35, **characterized in that** the gap is defined by a housing which is movable transversely to the

longitudinal axis of the spinning capillary, at least sectionwise, and that the flow cross-section of said gap is variable.

37. A spinning head according to one of the claims 9 to 36, **characterized in that** the spinning capillary is surrounded by at least one electric heating element.

38. A spinning system with a pressure equalizing container containing a spinning dope composed of cellulose, water and a tertiary amine oxide and of one or a plurality of stabilizing agents, said spinning system comprising a spinning head or a plurality of spinning heads by means of which the spinning dope can be spun so as to obtain formed bodies, and a spinning-dope conduit by means of which the spinning dope is conducted from said pressure equalizing container to said spinning head or said spinning heads, **characterized in that** the spinning head is implemented according to one of the claims 9 to 37 and/or that the spinning system is implemented for carrying out the method according to one of the claims 1 to 8.

39. A spinning system according to claim 38, **characterized in that** said spinning system includes an air gap after said spinning head or said spinning heads, the spinning dope flowing into and being drawn in said air gap after having left the spinning-dope discharge opening.

40. A spinning system according to claim 38 or 39, **characterized in that** said spinning system comprises a precipitation bath downstream of said air gap, the spinning dope discharged from the spinning head being immersed into said precipitation bath after having passed through the air gap and after having been drawn so as to obtain a formed body.

41. A spinning system according to one of the claims 38 to 40, **characterized in that** a drawing-off device is provided by means of which the spinning dope can be drawn off from the precipitation bath in the form of a precipitated thread or formed body.

42. A method according to anyone of claims 1 to 8, substantially as herein described and illustrated.

43. A head according to any one of claims 9 to 37, substantially as herein described and illustrated.

44. A system according to any one of claims 38 to 41, substantially as herein described and illustrated.

45. A new method of spinning a dope, a new spinning head, or a new spinning system, substantially as herein described.

FIG.1

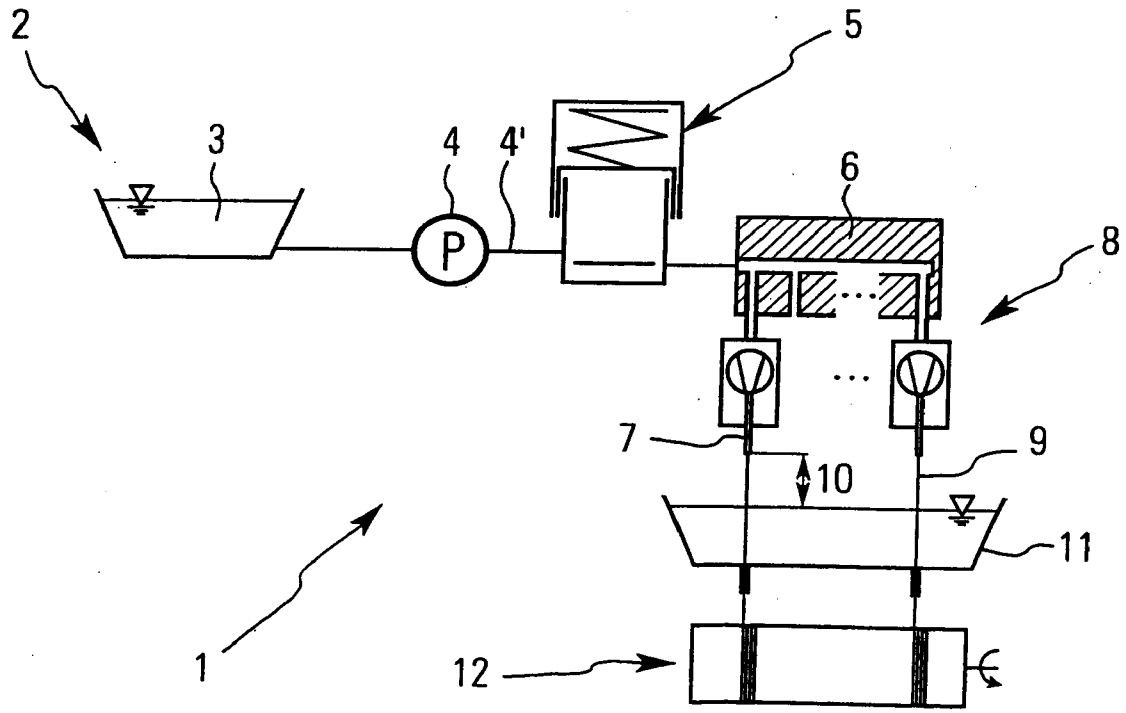

FIG.2

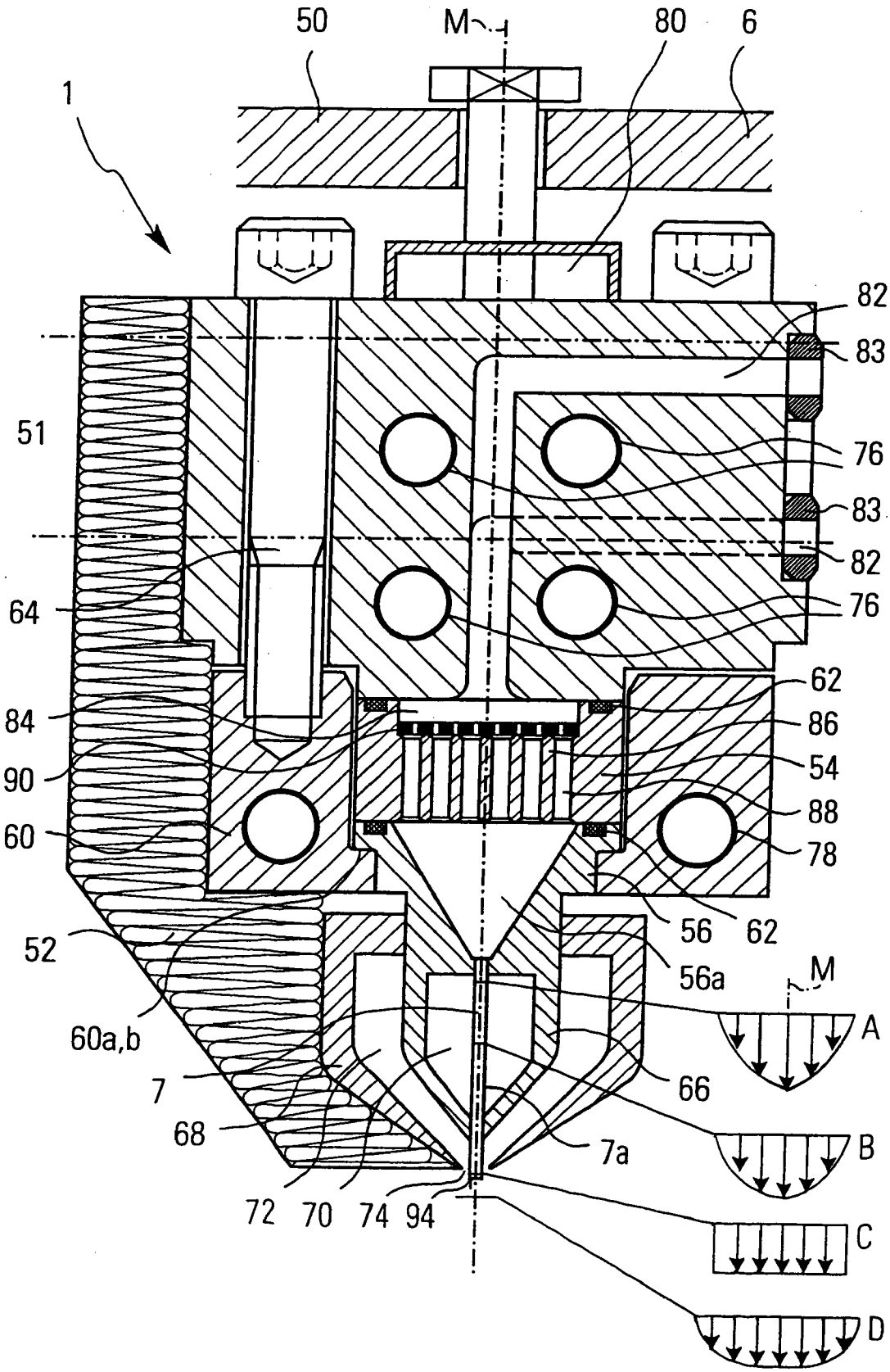
50
M
80
6
1
82
83
51
76
83
82
64
76
62
84
86
90
54
88
60
78
56
62
52
56a
M
A
60a,b
7
66
68
7a
B
72
70
74
94
C
D

FIG.3

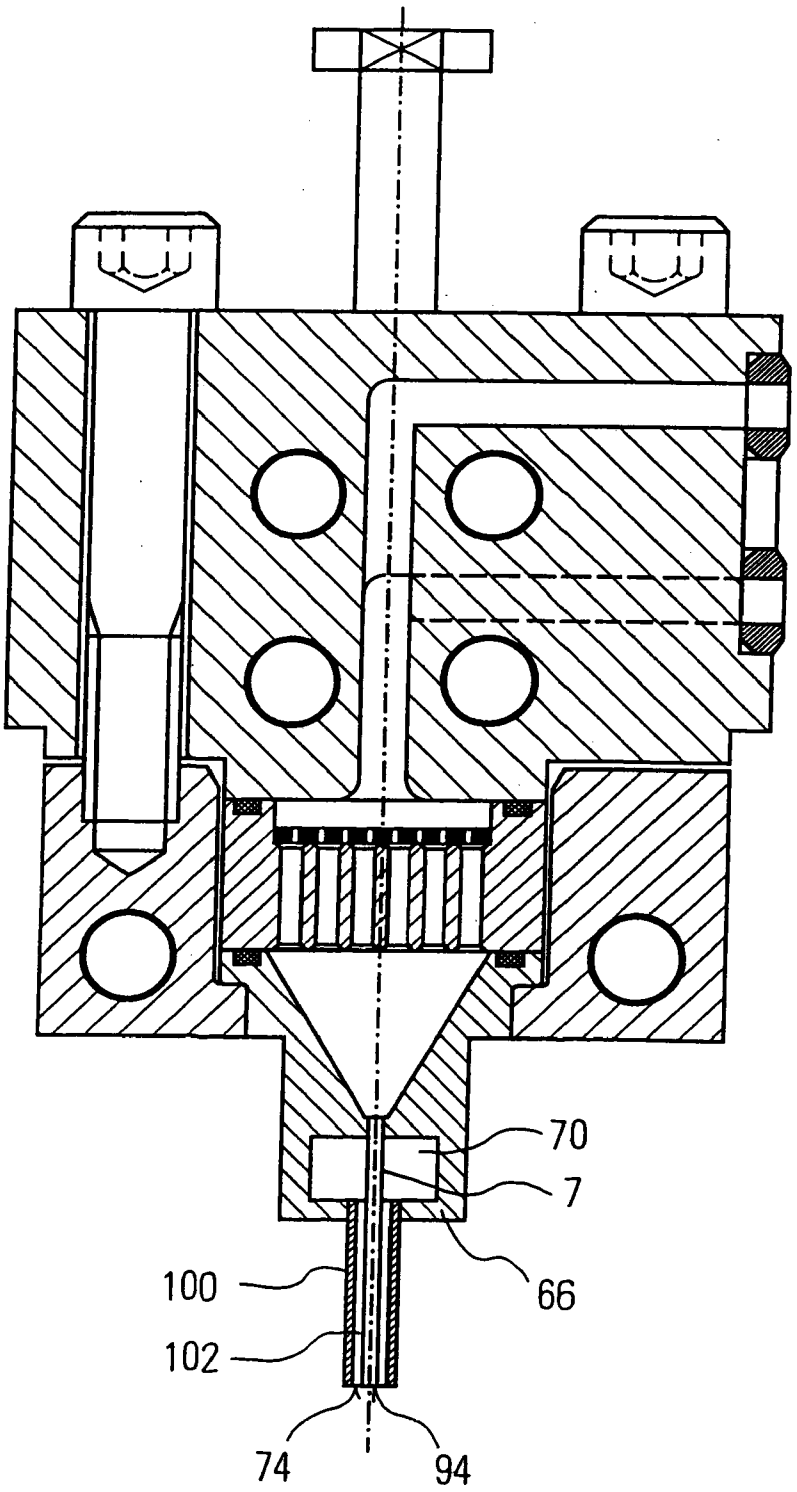

FIG.4

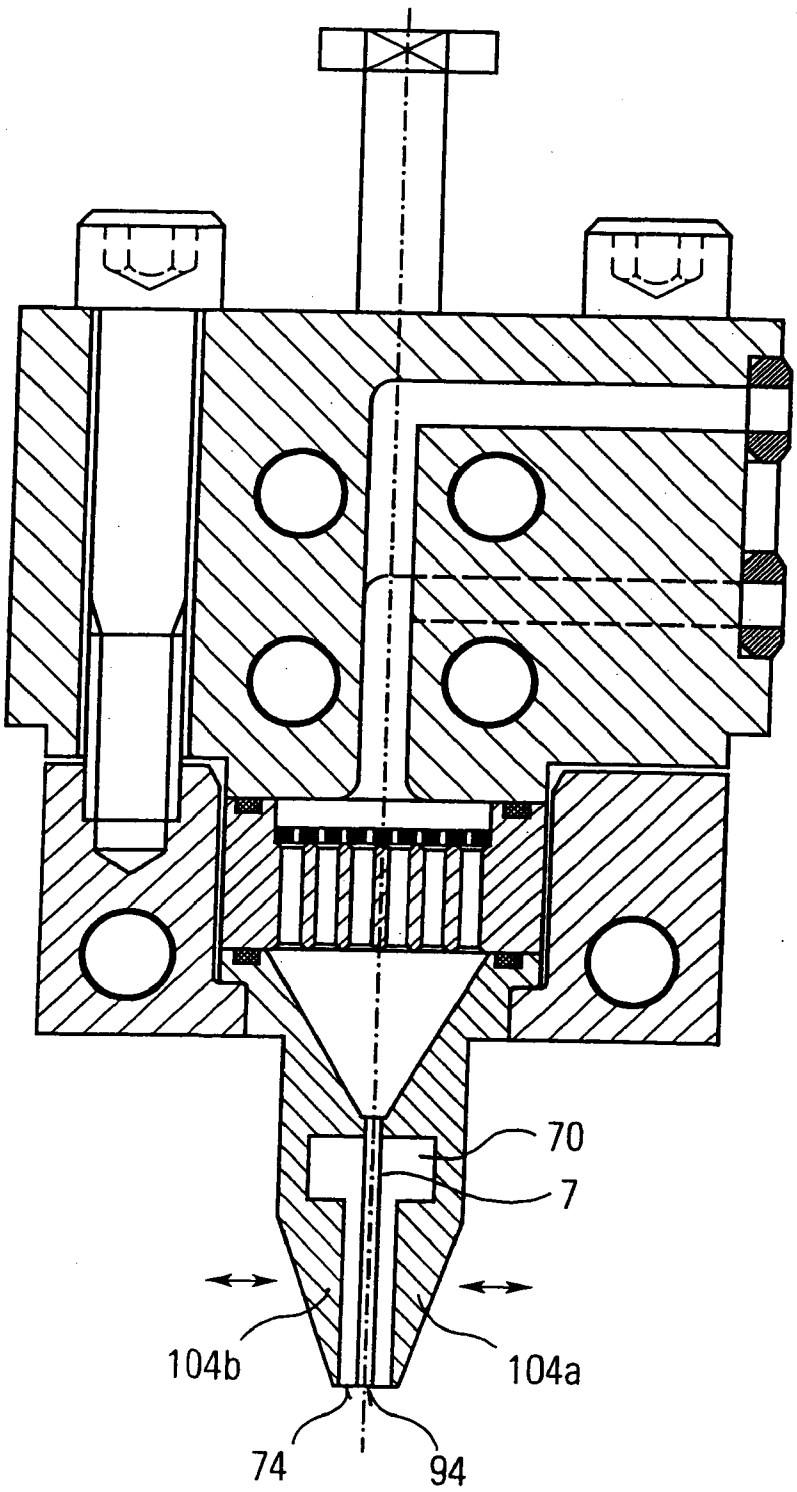

FIG.5

