United States Patent [19]

Dinning

[11] **3,799,259**

[45] **Mar. 26, 1974**

[54] **SIDE POCKET KICKOVER TOOL**

[75] Inventor: **Robert W. Dinning,** Houston, Tex.

[73] Assignee: **Macco Oil Tool Co., Inc.,** Houston, Tex.

[22] Filed: **Apr. 12, 1972**

[21] Appl. No.: **243,380**

[52] **U.S. Cl.** **166/117.5**
[51] **Int. Cl.** **E21b 7/06**
[58] **Field of Search** 166/117.5

[56] **References Cited**

UNITED STATES PATENTS

3,353,607	11/1967	Kinley	166/117.5
2,679,903	6/1954	McGowen et al.	166/117.5
2,948,341	8/1960	Fredd	166/117.5
2,988,146	6/1961	Fredd	166/117.5
3,353,608	11/1967	Beebe et al.	166/117.5
3,561,528	2/1971	Butler	166/117.5

Primary Examiner—James A. Leppink
Attorney, Agent, or Firm—Torres and Berryhill

[57] **ABSTRACT**

A well tool for installing a valve assembly in a side pocket valve mandrel connected in a pipe string comprising: a tubular body member adapted to coaxially receive a valve assembly for transportation through the pipe string to the mandrel. The body member is connected to an orientation assembly which is cooperable with the mandrel to orient the tool relative to the side pocket of the mandrel. Carried by the body member is a kickover assembly adapted to force the valve assembly out of the body member toward the mandrel side pocket for engagement therewith. A retainer assembly may also be carried by the body member for selective engagement with the valve assembly to prevent the kickover assembly from prematurely forcing the valve assembly toward the side pocket. The tool may be operated by wireline or pump-down equipment.

22 Claims, 10 Drawing Figures

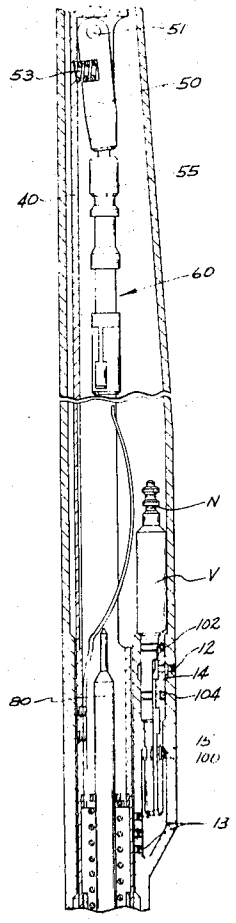

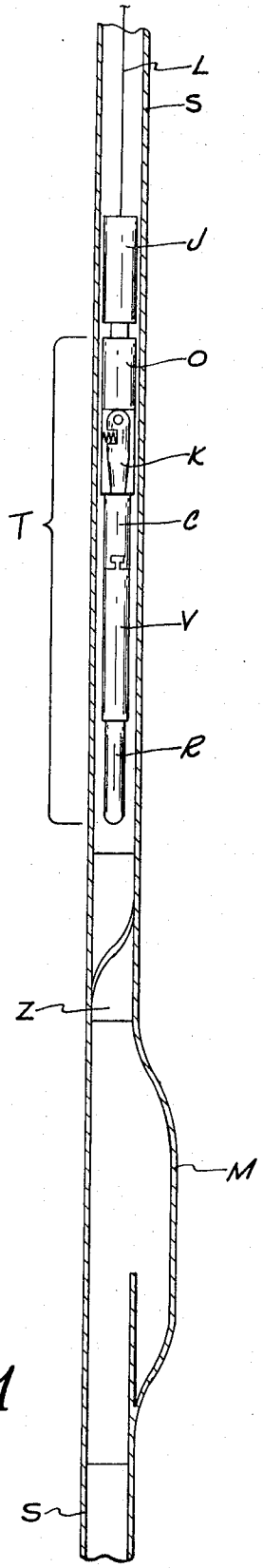

Fig. 1

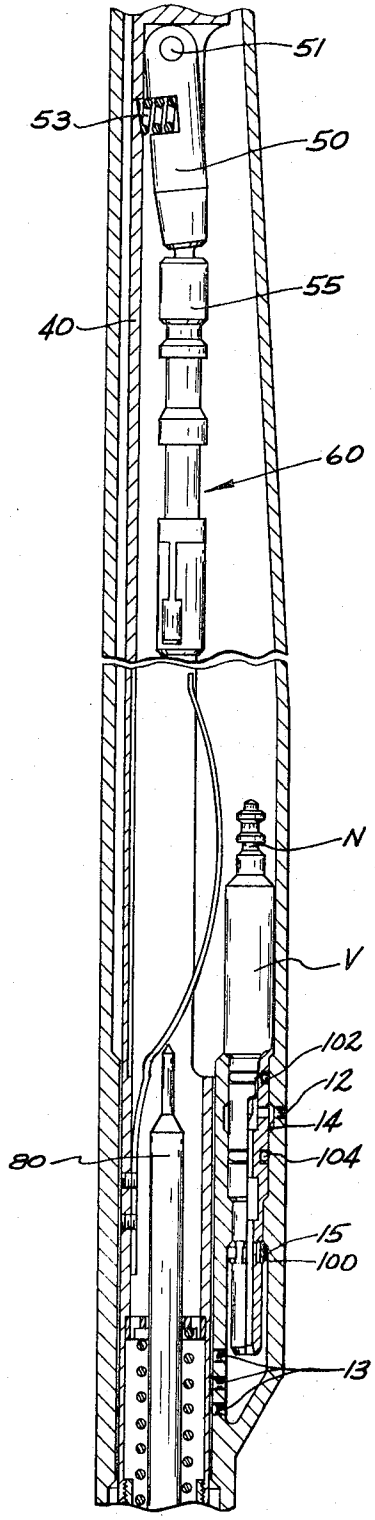

Fig. 4

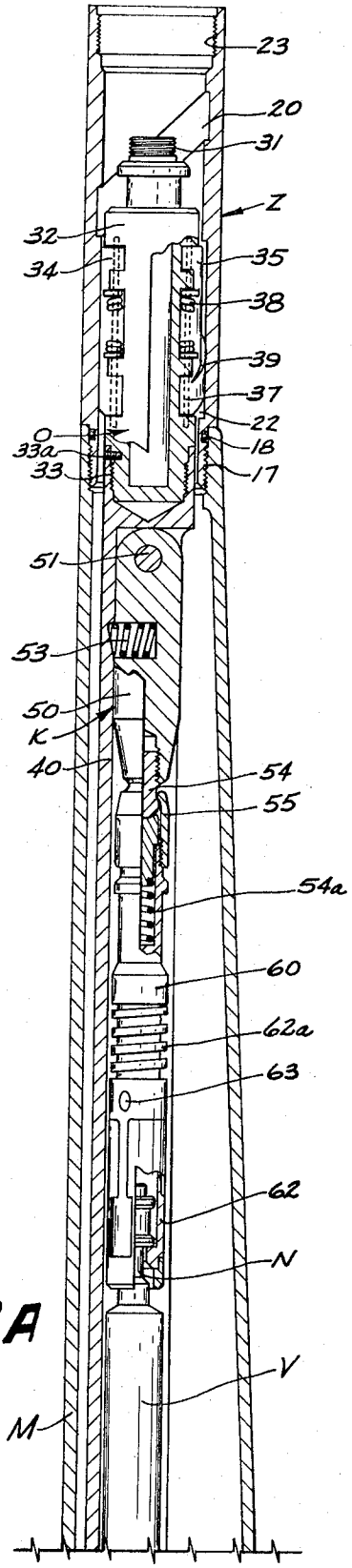
23
20
31
Z
32
34
35
38
39
37
22
18
17
O
33a
33
51
53
50
K
40
54
55
54a
60
62a
63
62
N
V
M

Fig. 2A

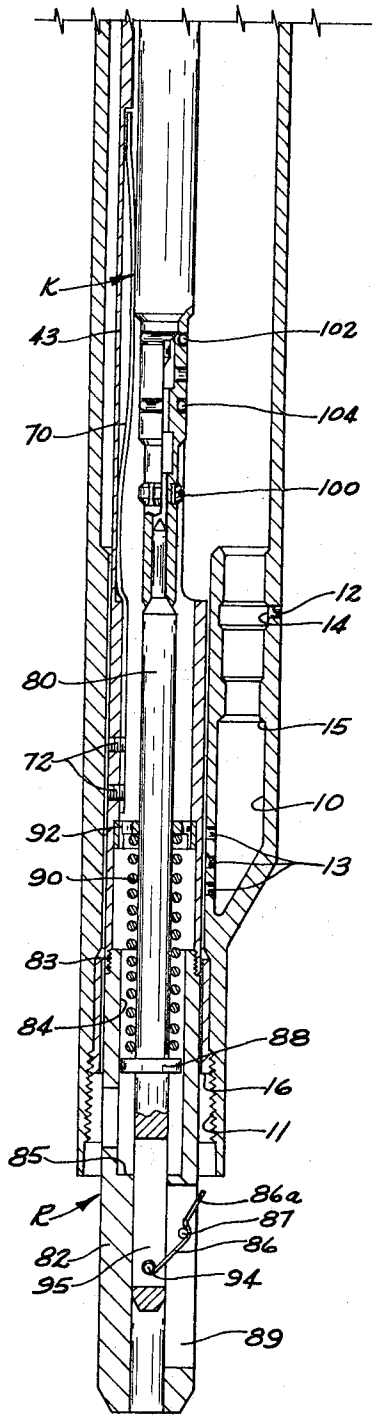
K
43
102
104
70
100
12
14
80
15
72
10
92
13
90
83
84
88
16
11
85
86a
R
87
86
82
95
94
89

Fig. 2B

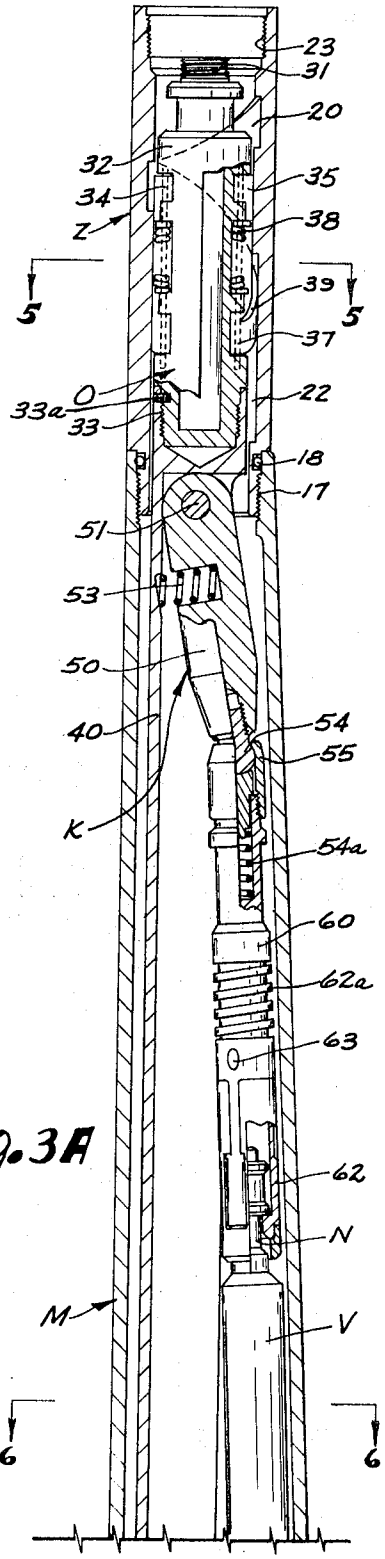
23
31
20
32
35
34
38
Z
5
5
39
37
O
33a
33
22
18
17
51
53
50
40
54
55
K
54a
60
62a
63
62
N
M
V
6
6

Fig. 3A

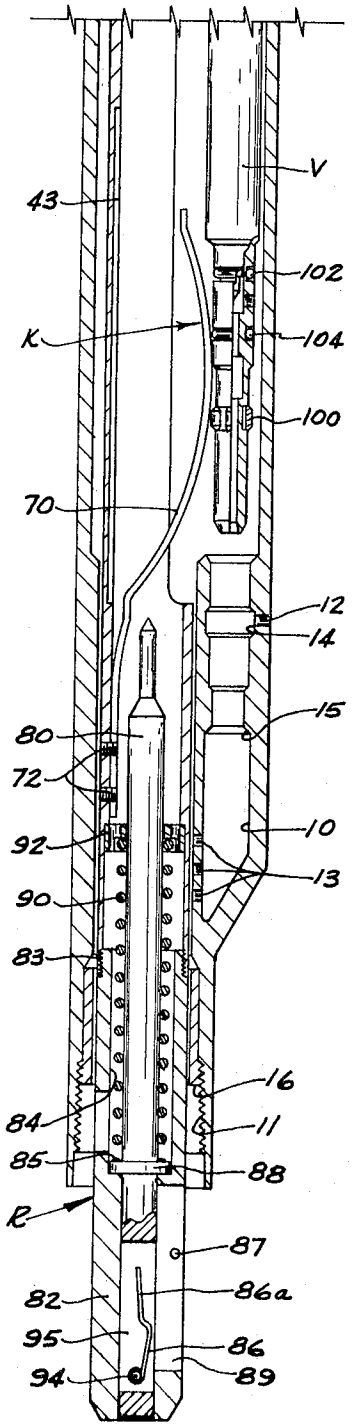
V
43
102
K
104
100
70
12
14
15
80
72
10
92
13
90
83
16
84
11
85
88
R
87
82
86a
95
86
94
89

Fig. 3B

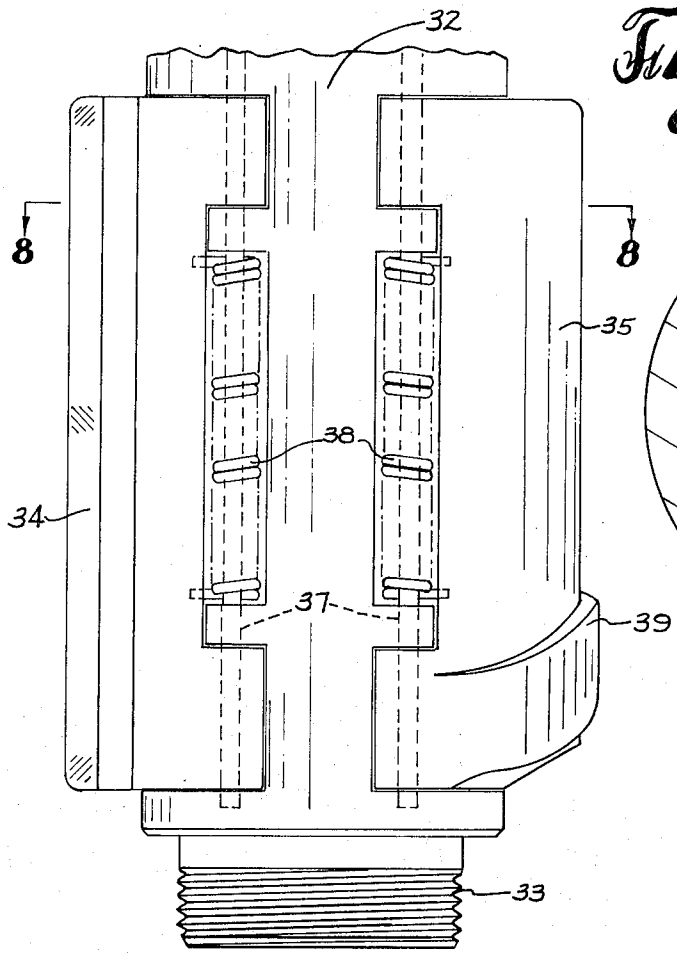

Fig. 7

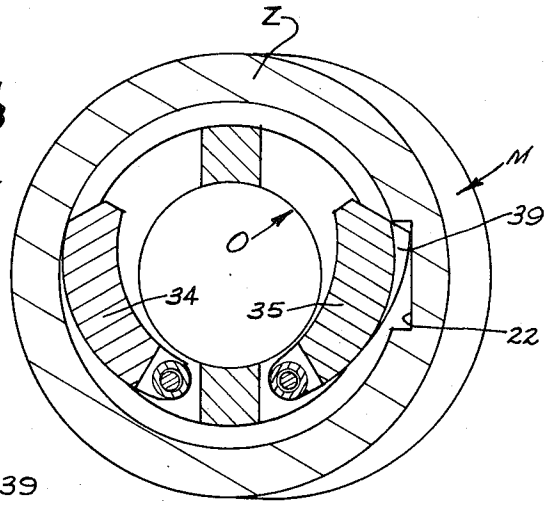

Fig. 5

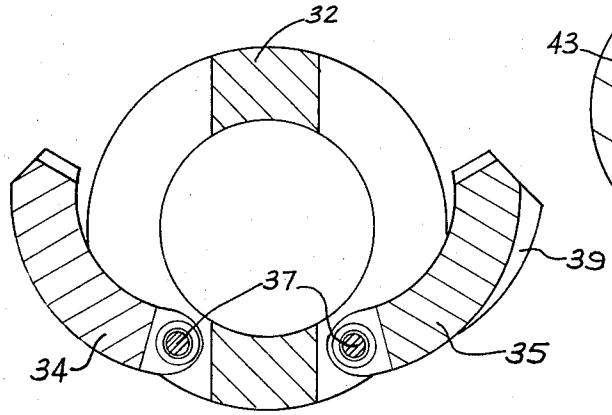

Fig. 8

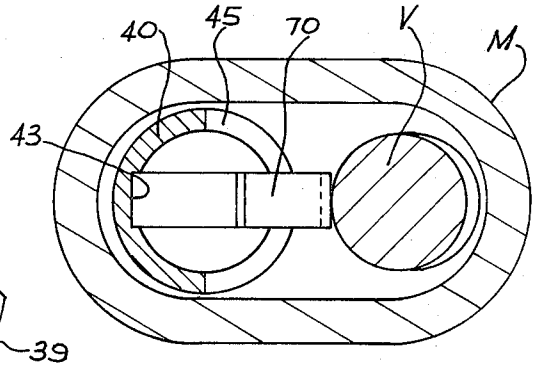

Fig. 6

SIDE POCKET KICKOVER TOOL

BACKGROUND OF THE INVENTION

1. Field of the Invention

The present invention pertains to apparatus for equipping wells for production of oil and/or gas. More specifically, the present invention concerns tools suitable for installing well equipment in a side pocket mandrel of a pipe string.

2. Brief Description of the Prior Art

In equipping a well for production, it is often necessary to install various downhole equipment by attaching such equipment to a tool for running it through the proper pipe string. For example, gas lift valves and various types of downhole safety valves are now commonly run in tubing strings attached to wireline or pump-down tools. A specially designed member is frequently installed in the tubing string to receive such valves. These specially designed receivers are commonly called mandrels.

For several years now, there has been a line of downhole valve receivers, commonly referred to as side pocket mandrels. As implied by the name, these mandrels are provided with a side pocket for receiving a corresponding valve assembly. The side pocket is usually cylindrical in shape and its axis is parallel to, but spaced away from, the axis of the tubing bore so as to leave the tubing bore unobstructed. Thus, tubing flow is unrestricted and equipment and tools which are passable through the tubing string are also passable through the mandrel.

Of course, one of the problems involved with a side pocket mandrel is the guiding of its corresponding valve assembly into the side pocket. These valve assemblies are normally attached to a wireline tool and the tendency is to remain in coaxial alignment with the tubing bore, bypassing the side pocket. Therefore, various tools have been developed to guide or direct the valve assembly into the side pocket. In the most common type of kickover tool, there is provided a plurality of spring centering devices which when expanded within the mandrel cause the tool and consequently the attached valve assembly to kick over into position above the side pocket of the mandrel. However, with such tools special care must be taken to assure that the tool is properly oriented when it enters the mandrel. Improper orientation may cause the attached valve assembly to be kicked to a position not directly in line with the side pocket. Furthermore, such tools require that the mandrel be of a relatively great length to accommodate the tool and attached valve assembly.

SUMMARY OF THE INVENTION

In the present invention, a kickover tool is provided which eliminates many of the problems of the prior kickover tools. The tool is provided with an orientation assembly which cooperates with a spiral orientation groove within the mandrel to automatically and properly align the tool as it enters the mandrel. Carried on the body of the tool, which is attached to the orientation assembly, is a kickover assembly which comprises an arm, one end of which is releasably attached to the upper end of the valve assembly and is adapted to pivot away from the tool body toward the side pocket. The kickover assembly may also comprise a leaf spring longitudinally disposed along the wall of the tool body and

in engagement with the side of the valve assembly, biasing the valve assembly toward the side pocket. A retainer assembly is provided for engaging the lower end of the valve assembly to prevent the kickover assembly from prematurely kicking the valve assembly to one side. The retainer assembly comprises a latch which is released, upon movement of the retainer assembly by the side pocket in first a downward direction and then an upward direction, to disengage the retainer assembly from the valve assembly, allowing the valve assembly to be kicked over into alignment with the side pocket by the kickover assembly. Further downward movement then causes the valve assembly to properly engage the side pocket. An upward pull on the wireline then causes the tool to be released from the valve assembly for removal from the well. Thus, the orientation problems of the prior art are eliminated. Furthermore, with the design of the present invention, the side pocket mandrel for receiving the valve assembly may be considerably reduced in length, resulting in substantially reduced manufacturing costs. Further objects and advantages of the invention will be apparent to those skilled in the art after reading the description which follows in conjunction with the accompanying drawings.

BRIEF DESCRIPTION OF THE DRAWINGS

In describing the invention, reference will be made to the accompanying drawings in which:

FIG. **1** is a schematic representation of a side pocket mandrel connected in a tubing string, showing the kickover tool of the present invention and a valve assembly being lowered on a wireline through the tubing string for installation in the side pocket mandrel;

FIGS. **2A** and **2B** are sectional elevation views of a side pocket mandrel and a kickover tool, according to a preferred embodiment of the invention, showing the tool carrying a valve assembly and in a non-activated position in which the valve assembly is maintained in substantially coaxial alignment with the tubing bore, FIG. **2B** being a continuation of FIG. **2A**;

FIGS. **3A** and **3B** are sectional elevation views of the mandrel and kickover tool of FIGS. **2A** and **2B** showing the tool in an activated position in which the valve assembly has been kicked out of coaxial alignment with the tubing bore and into a position for engagement with the mandrel side pocket, FIG. **3B** being a continuation of FIG. **3A**;

FIG. **4** is a fragmentary sectional elevation view of the mandrel and kickover tool of FIGS. **2A**, **2B**, **3A** and **3B** showing the valve assembly fully engaged in the side pocket and showing the tool after release from the valve assembly ready for removal from the well;

FIG. **5** is a horizontal cross-section of the orientation area of the tool and mandrel of FIG. **3A** taken along line **5—5** thereof;

FIG. **6** is a horizontal cross-section of the tool and mandrel taken along line **6—6** of FIG. **3A**;

FIG. **7** is a vertical elevation view of the orientation assembly employed in the exemplary embodiment of the invention; and

FIG. **8** is a horizontal cross-section of the orientation assembly of FIG. **7** taken along line **8—8** thereof.

DESCRIPTION OF A PREFERRED EMBODIMENT

Referring first to FIG. **1**, there is shown a side pocket mandrel M connected in a tubing string S of a well.

Being lowered on a wireline L through the tubing string toward mandrel M is a valve assembly V carried by a kickover tool T. Suitable jars J and related wireline equipment are connected above the tool T to provide the necessary weight for operation of the tool and engagement of the valve V with the mandrel side pocket. Although the present invention is described with reference to wireline operation, it may easily be adapted for pump-down operation.

The tool T comprises, in general, an orientation assembly O, kickover apparatus K, connector assembly C, and retainer assembly R. All of these components, which will be described in detail hereafter, are either connected to or carried by the body of tool T as will be more clearly understood hereafter. Connected in the tubing string S above the mandrel M is an orientation sleeve Z, the purpose of which is to cooperate with orientation assembly O to properly orient the tool T relative to the side pocket mandrel M. The orientation sleeve Z may be manufactured as an integral portion of the mandrel M.

Referring also to the remaining drawings, the structure and operation of an exemplary embodiment of the invention will be described in detail. The side pocket mandrel M may be of the conventional type having a cylindrical side pocket **10**, the axis of which is substantially parallel to the flow axis of the mandrel flow bore and the tubing string in which it is connected but spaced laterally therefrom a sufficient distance to prevent obstruction of the flow bore. The side pocket **10** is adapted to receive a valve assembly suitable for the service which is to be performed. The side pocket **10** illustrated herein is specifically for receiving a gas lift valve and is provided with flow ports **12** and **13** and an annular pressure groove **14**, necessary for operation of such a valve. An annular latch shoulder **15** is provided for engagement by latches carried by the valve. Attached above the mandrel M, or alternately constructed as an integral part thereof, is an orientation sleeve Z, the purpose of which will be more clearly understood hereafter. The orientation sleeve Z is provided with a helical or spiral cam slot **20** which begins near the upper end of the orientation sleeve Z and moves through an angle of approximately 360° where it terminates in a longitudinal slot **22**. The orientation sleeve may be provided with a threaded box **23** for connection with the threaded pin of an adjacent tubing string section. The lower end of the mandrel M may also be provided with a threaded box **11** for connection with a subadjacent section of the tubing string.

Shown in FIGS. 2A and 2B, with the mandrel M in its deactivated or running position, is the kickover tool of the present invention which comprises the orientation assembly O, a tubular body member **40**, kickover apparatus K and retainer assembly R. Carried by the kickover tool within body **40** and in substantially coaxial alignment therewith is the valve assembly V which, in the exemplary embodiment, is illustrated as a gas lift valve. The entire kickover tool and valve V are lowered through the tubing string into the mandrel M on a wireline (not shown) attached to the upper end of orientation assembly O by the threaded pin **31**. It will be appreciated that the kickover tool and valve V may be positioned and operated by conventional pump-down equipment.

The orientation assembly O may comprise a cylindrical member **32** which may be attached to body member **40** by a pin and box connection **33**. A lock pin **33*a*** is employed to precisely fix the axial position of member **32** with respect to member **40**. Mounted on cylindrical member **32**, as best seen in FIGS. **7** and **8**, is a pair of guide vanes **34, 35**, arcuate in cross-section, which are hingedly mounted on vertically disposed hinge pins **37**. The vanes are biased by means of coil springs **38** to swing outwardly into brushing engagement with the walls of the tubing and the orientation sleeve Z. One of the vanes **35** is provided in its outer convex side, with an outwardly projecting cam **39** shaped to be received in close sliding engagement with spiral cam slot **20** of the orientation sleeve Z and when so received, to effect rotation of the entire kickover tool in response to downward movement of the latter through the orientation sleeve Z and the mandrel M. The outer convex side of the other vane is smooth and cooperates with the vane carrying the cam **39** to center the assembly within the tubing.

The valve assembly V is initially received within the tubular body **40** for transportation through the pipe string to the mandrel M. A longitudinal section is removed from the body **40** to provide a side opening through which the valve assembly V may be forced or kicked for alignment with the side pocket **10**, as will be more clearly understood hereafter. In the initial or running position shown in FIGS. 2A and 2B, the valve assembly V is maintained within the body **40** by the retainer assembly R and the arm member **50** which is a portion of the kickover apparatus K.

The arm **50** is pivotally attached to the body **40** by a pivot pin **51**, the axis of which is generally perpendicular to the direction of movement for aligning valve assembly V with the side pocket **10**. The arm member **50** is biased in an outward direction by a spring **53**. Connected to the free end of arm member **50** by a ball and socket joint **54, 55** is a connector device **60** which may be a standard running tool. The ball and socket joint **54, 55** is made stiff by a coil spring **54*a*** so that the arm **50** and connector **60** tend to remain coaxial.

The running tool **60** is connected to the pulling neck N of valve assembly V by a conventional latch assembly which includes cantilevered latches **62**. The latches **62** are temporarily held in place on the tool **60** by frangible shear pins or screws **63**. The latches **62** are biased downwardly by a compressed coil spring **62*a***. A leaf spring **70** also employed to bias the valve V outwardly is attached to tubular body **40** by screws **72**. In the initial or running position illustrated in FIG. **2**, the spring **70** is received in a longitudinal slot **43** found along the wall of tubular member **40**.

Initially engaging the lower end of valve assembly V so as to maintain the deactivated or running position is a cylindrical stem member **80** which is a portion of the retainer assembly R. The retainer assembly R also comprises a tubular nose or guide portion **82** which slidingly receives the lower end of stem **80**. The guide portion **82** may be threadingly attached at **83** to the lower end of tubular body **40** and is provided with a counterbore **84** at the end of which is an annular shoulder **85** which provides a stop for an annular flange **88** surrounding stem **80**, as will be more clearly understood hereafter. The stem **80** is movable from the extended position shown in FIG. 2B, in which it engages valve assembly V, to a retracted position, shown in FIG. 3B. The stem **80** is biased toward the retracted position by a spring member **90** which surrounds a portion of the

stem between annular flange **88** and an annular spring retainer **92** carried by tubular body **40**. The extended or running position of the stem **80**, in which it engages valve V, is maintained by engagement of a spring latch **86** with pin **87** which is mounted in a slot **89** of the guide portion **82**. The spring latch **86** is in turn swingably mounted on a pin **94** carried in a slot **95** of stem **80**. Thus, in the position shown in FIGS. 2A and 2B, the valve V is received within the tubular body **40** and in engagement with stem **80**, preventing premature displacement therefrom.

As can best be seen in FIG. 2B, the spring **86** is provided with an extension **86***a* which projects out of slot **89** for slight interference with closely surrounding walls through which the tool may pass. As long as the tool is traveling in a downwardly direction, the spring extension **86***a* may be bent back toward slot **89** without releasing the latch. However, if the tool direction is reversed, in an upward movement, the spring extension **86***a* may engage any recess or downwardly facing shoulder causing the latch **86** to disengage pin **87** and releasing stem **80** for downward movement. This is precisely how the tool is activated to position the valve V for engagement with side pocket **10**. After the tool and valve are lowered through the mandrel M to the position shown in FIGS. 2A and 2B, an upward force is applied thereto causing the valve and tool to move upwardly until the spring extension **86***a* engages a shoulder, such as **16** within mandrel M. A slight additional force causes the spring **86** to disengage pin **87** at which time the stem **80** snaps downwardly under the compressed force of spring **90** to the position shown in FIG. 3B. Notice that the latch **86** is caused to swing or retract within slot **95** by the lower end of slot **89**. Once the stem **80** has been retracted, valve V is free to move through the longitudinal opening **45** of tubular body **40** toward alignment with side pocket **10** and is in fact forced to do so by leaf spring **70** and arm spring **53**. The valve V is now positioned directly above side pocket **10** for engagement therewith. The tool and valves are then lowered again causing the valve V to be forced into the side pocket **10** where the valve latches **100** expand under latch shoulder **15** and the valve seal assemblies **102** and **104** sealingly engage the inner walls of side pocket **10** above and below the pressure annulus **14**, as seen in FIG. 4. (Note that the longitudinal slot **22** in orientation sleeve Z permits the necessary up and down movement without disturbing the orientation of the tool.) Subsequently, a downwardly directed jarring force is applied to the tool **60** to cause the frangible connections **63** to be broken, releasing the latches **62** and running tool **60** from the running neck N of the valve V in a conventional manner. The tool may then be simply removed by pulling upwardly on the wireline leaving the valve assembly properly installed in the side pocket as shown in FIG. 4.

From the foregoing description, it is evident that the kickover tool of the present invention is a definite improvement over kickover tools of the prior art. Positive orientation of the valve is attained prior to its release for engagement with the side pocket. The tool provides a simple, reliable way of maintaining the valve in a deactivated or running position and a simple, reliable way of kicking the valve into alignment with the mandrel side pocket. In addition to being simple, reliable, and easily manufactured, the present invention allows the valve mandrel length to be substantially reduced, resulting in a decrease in manufacturing costs for the mandrel and a reduction of clutter in the well.

Although only one embodiment of the invention has been described herein, many variations will be apparent to those skilled in the art. For example, the tool could be easily adapted for retrieving a valve installed in a side pocket mandrel. In fact, such application would only require a replacement of connector **60** with a pulling type connector. It might also be desirable to remove the leaf spring **70** for pulling. Although the embodiment described herein has been illustrated with reference to the installation of a gas lift valve, it is not so limited. Any other type of equipment, which is to be installed in a side pocket mandrel could also be handled by the tool of the present invention, if properly adapted. For example, subsurface safety valves are now being installed in side pockets. The embodiment of the invention described herein is for wireline operation. It can easily be adapted for pump-down operation with suitable tools variously known in the industry as "Piggy-Back", "Through Flow Line" (TFL) and "Tubing Pump Down" (TPD). Many other modifications and applications of the tool could be made without departing from the spirit of the invention. It is therefore intended that the scope of the invention be limited only by the claims which follow.

I claim:

1. A well tool for installing a valve assembly in the cylindrical side pocket of a side pocket valve mandrel connected in a pipe string, the axis of said side pocket being substantially parallel to but offset from the axis of said pipe string so that the bore of said pipe string is unobstructed, comprising:

a. tubular body means adapted to coaxially receive said valve assembly for transportation through said pipe string to said mandrel;

b. orientation means connected to said body means cooperable with said mandrel to orient said tool relative to the side pocket of said mandrel; and

c. kickover means carried by said body means adapted to force said valve assembly out of coaxial alignment with said body means toward coaxial alignment with said side pocket for engagement therewith;

d. said kickover means having arm means pivotally attached at one end to said body means and attached at the opposite end by multi-directional pivot means to connection means, said connection means being releasably attached to one end of said valve assembly, said arm means allowing said valve to be coaxially positioned with respect to said side pocket prior to said engagement therewith.

2. A well tool as set forth in claim **1** in which said opposite end of said arm means is biased away from the axis of said body means by spring means.

3. A well tool as set forth in claim **1** in which said kickover means comprises spring means carried by said body means for engagement with said valve assembly and adapted to force said valve assembly away from the axis of said body means into said coaxial alignment with said side pocket.

4. A well tool as set forth in claim **3** in which said spring means comprises a leaf spring longitudinally disposed along the wall of said body means.

5. A well tool as set forth in claim **4** characterized by the retainer means carried by said body means engageable with said valve assembly to prevent said kickover

means from forcing said valve assembly toward said side pocket.

6. A well tool as set forth in claim **5** in which said retainer means comprises latch means operable to allow disengagement of said retainer means from said valve assembly to permit said kickover means to force said valve assembly toward said side pocket.

7. A well tool as set forth in claim **1** characterized by retainer means carried by said body means engageable with said valve assembly to prevent said kickover means from forcing said valve assembly toward said side pocket.

8. A well tool as set forth in claim **7** in which said retainer means comprises elongated stem means coaxially aligned with said body means and mounted for limited axial movement relative thereto.

9. A well tool as set forth in claim **8** in which said retainer means comprises spring means engaging said stem means for biasing said stem means in one direction.

10. A well tool as set forth in claim **9** in which said stem means is biased by said spring means toward disengagement with said valve assembly, said retainer means comprising latch means for holding said stem means in engagement with said valve assembly, said latch means being operable to release said stem means for disengagement from said valve assembly.

11. A well tool as set forth in claim **7** in which said kickover means comprises biasing means disposed along the wall of said body means and engageable with said valve assembly for biasing said valve assembly toward said side pocket.

12. In combination a side pocket valve mandrel having a flow bore and a cylindrical side pocket, the axis of which is parallel to but laterally spaced from the axis of said flow bore, and a well tool for installing a valve assembly in said mandrel in which said well tool comprises:

a. tubular body means receivable within said mandrel and adapted to receive said valve assembly for substantially coaxial alignment therewith;

b. kickover means carried by said body means and engaging said valve assembly for biasing said valve assembly away from said body means toward the side pocket of said mandrel for engagement therewith, said kickover means including arm means, pivotally attached at one end to said body means and releasably attached at the opposite end by connection means to said valve assembly, and biasing means engaging said valve assembly biasing said valve assembly toward substantially coaxial alignment with said side pocket prior to said engagement therewith; and

c. retainer means carried by said body means and movable from a first position preventing said valve assembly from engaging said side pocket to a second position allowing engagement with said side pocket.

13. The combination of claim **12** in which said connection means comprises a ball and socket joint.

14. The combination of claim **12** in which said connection means comprises a retrievable latching device pivotally attached to said arm means and releasably attached to said valve assembly by frangible means.

15. The combination of claim **12** in whixh said kickover means comprises biasing engageable with said valve assembly for biasing said valve assembly toward said side pocket.

16. The combination of claim **15** in which said kickover means comprises second biasing means engaging said arm means for biasing said opposite end of said arm means toward said side pocket.

17. The combination of claim **12** in which said retainer means comprises stem means mounted for limited longitudinal movement and engaging said valve assembly when said retainer means is in said first position.

18. The combination of claim **17** in which said retainer means comprises latch means engaging said stem means for maintaining said first position.

19. The combination of claim **18** in which said retainer means comprises spring means biasing said stem means away from said engagement with said valve assembly, said latch means being releasable to permit movement of said retainer means to said second position.

20. The combination of claim **12** in which said tool and said mandrel are provided with orientation means mutually engageable to orient said tool relative to said side pocket on axial movement of said tool relative to said mandrel.

21. The combination of claim **20** in which said orientation means comprises cam means on one of said tool and said mandrel and a helical cam slot on the other.

22. The combination of claim **21** in which said helical cam slot communicates with a longitudinal slot on said other of said tool and mandrel.

* * * * *

UNITED STATES PATENT OFFICE
CERTIFICATE OF CORRECTION

Patent No. 3,799,259 Dated March 26, 1974

Inventor(s) Robert W. Dinning

It is certified that error appears in the above-identified patent and that said Letters Patent are hereby corrected as shown below:

Column 6, line 65: change "4" to --3--.

Column 8, line 17: after "biasing" insert --means--.

Signed and sealed this 17th day of September 1974.

(SEAL)
Attest:

McCOY M. GIBSON JR.
Attesting Officer

C. MARSHALL DANN
Commissioner of Patents