Feb. 25, 1941. J. FITCH 2,233,161

SPRAYING DEVICE

Filed Oct. 16, 1939

Fig. 1.

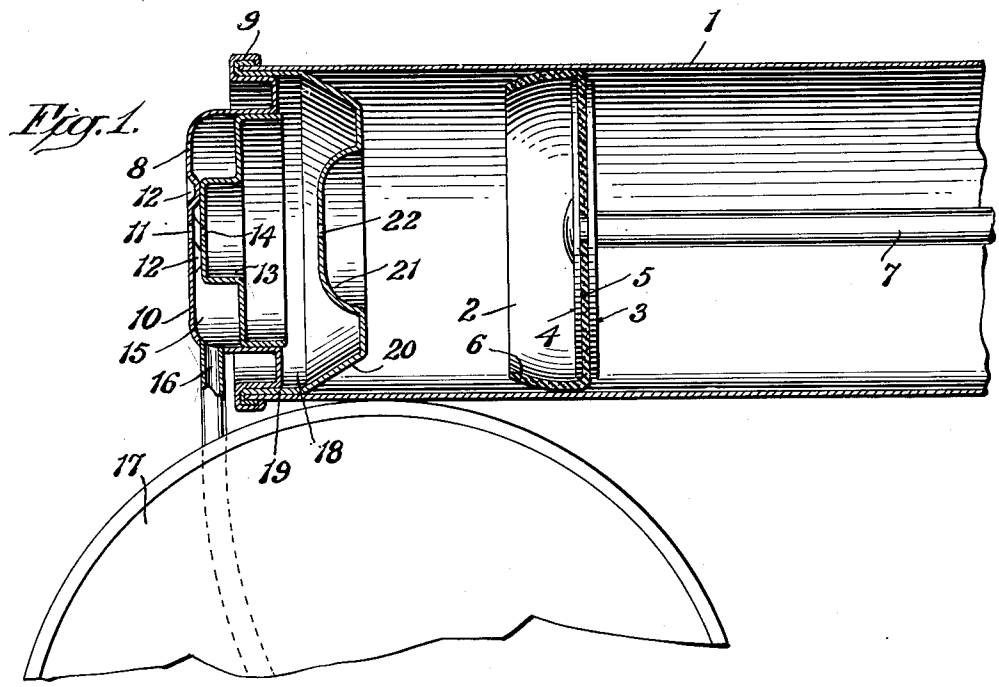

Fig. 2.

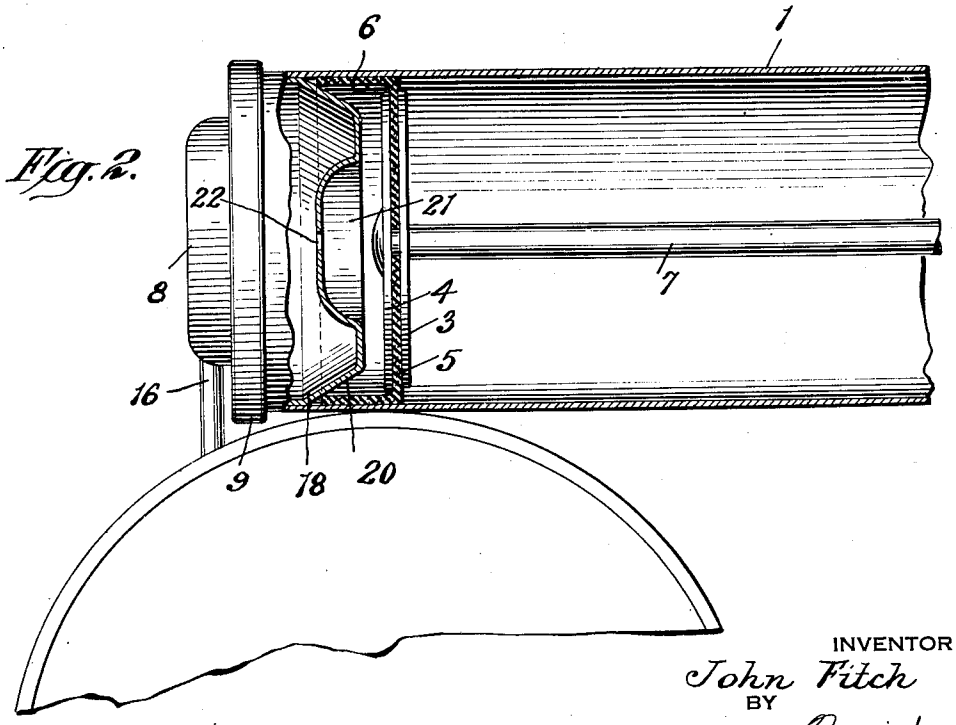

INVENTOR

John Fitch

BY

Harry Rabinowitz

ATTORNEY

Patented Feb. 25, 1941 2,233,161

UNITED STATES PATENT OFFICE

2,233,161

SPRAYING DEVICE

John Fitch, Bloomfield, N. J., assignor to William Martin Vogel, Montclair, N. J.

Application October 16, 1939, Serial No. 299,707

2 Claims. (Cl. 299—88)

This invention relates to spraying devices, and particularly the hand-operated type generally employed for the distribution of liquid insecticide or similar materials. One of the objections found with sprayers of this general type is the tendency of the piston after a short period of use, to assume such a shape that it fails to fit the cylinder snugly so that the air displaced by movement of the piston is substantially decreased and consequently the effectiveness of the sprayer is lost.

A primary object therefore, is to provide in a sprayer of this character, means by which the piston, or so-called "washer" of the piston, which is usually composed of a flexible material such as leather, will be expanded to have its side wall forced outwardly toward the wall of the cylinder upon each stroke of the piston in a direction toward the spraying end of the cylinder. With a structure of this character, a snug fit of the piston within the cylinder is assured since, upon each stroke of the piston, it is forced against the wall of the cylinder and made to conform thereto so that efficiency in air ejection is secured.

More particularly, the invention contemplates the provision of a cylinder provided at one end with a spraying head and having a piston mounted for reciprocating movement within the cylinder, with a stop plate interposed between the spraying head and piston and provided with a spreader surface which expands or spreads the wall of the cup-shaped flexible piston washer outwardly or in firm contact with the wall of the cylinder.

In the accompanying drawing, wherein an embodiment of the invention is shown, Fig. 1 is a sectional view through the piston, spraying head, cylinder and other parts of the improved device, and Fig. 2 is a similar view showing the piston being brought in contact with the inclined annular spreader surface of the stop plate, so that the wall of the piston is being spread outwardly thereby, and into contact with the cylinder wall.

In the drawing, 1 indicates the piston chamber of cylinder of the sprayer, the same being of the conventional cylindrical form and usually composed of a rolled-up section of sheet metal having its longitudinal edges seamed together. Mounted for reciprocating movement within the cylinder 1 is a piston 2 of conventional form, the same usually consisting of the metallic disks 3 and 4 between which a cup-shaped head or washer 5 composed of leather or some similar flexible material, is held. The member 5 so formed constituting the piston head, and generally referred to as a "washer" is of cup formation and has an annular side wall 6, which is adapted to be maintained in air-tight contact with the inner surface of the wall of the cylinder 1.

The piston so constructed is fastened at one end of a piston rod 7 which extends out of the rear end of the piston chamber or cylinder 1, usually through an opening formed in a plug located in that end. The projecting end of the rod 7 terminates in a handle, not shown, but of conventional form, to enable the piston to be reciprocated in the usual manner. The forward end of the cylinder is closed by a cap member 8 constituting a spraying head, having its marginal edge seamed at 9 to the end of the cylinder 1 said cap being formed with a forwardly extending cylindrical cup portion 10, having a front end provided with a centrally located spray aperture 11 and spaced inwardly extending projections 12 which abut against the forward end of a cup 13 frictionally fitted within the cap member 8. The cup member 13 is provided with an air-blast opening 14 aligned with the spray opening 11. The shape of the cup 13 is such as to provide annular chamber 15 between it and the cap member 8, and a siphon tube 16 leads into this chamber from within the liquid receptacle 17.

Located between the closure cap 8 and the piston 2 is a stop-plate 18 which is formed with a flange 19 held within the lock seam 9 thereby holding the plate at a predetermined position with respect to the closure cap 8. Said plate 18 is formed with an annular inclined surface 20 directed inwardly toward the piston 2 and constituting a spreader surface adapted to contact with the wall portion 6 of piston 2 to spread said wall portion outwardly and into contact with the inner face of the wall of the cylinder 1 when the piston 2 reaches the limit of its stroke in a direction toward the spraying end or closure cap 8 on cylinder 1. Plate 20 is formed with a centrally located domed portion 21, having an air-blast opening 22. Thus, the plate 20 is generally of frustro-conical formation and is so positioned that it not only acts as a stop member for limiting the movement of the piston toward the spraying head 8, but when the limit of this movement has been reached, the wall portion 6 of the piston has been brought into contact with the inclined surface 20 on plate 18 and has been spread outwardly against the wall of the cylinder, as shown in Fig. 2. In sprayers of conventional construction a tendency is shown by the piston to have its wall portion 6 curl or roll inwardly away from the wall of the piston as indicated in Fig. 1. In the present construction,

since the wall portion 6 of the piston is brought into contact with the inclined spreader surface 20 each time that the piston is moved toward the spraying end of cylinder 1, the wall portion of the piston is spread outwardly and into firm contact with the wall of the cylinder so that an effective and complete ejection of air takes place through the air-blast openings 22 and 14 and liquid is drawn up into the annular chamber 15 and expelled in the form of a spray out through the sprayer opening 11.

What I claim is:

1. In a sprayer, a cylinder, a piston mounted for reciprocation therein, a spraying head on one end of the cylinder, a flanged plate within the cylinder and spaced from the head, the end of the cylinder, the head and the plate being united by a single lock seam, the plate having an inwardly extending conical portion directed toward the piston for contact with the piston to spread the wall of the piston against the wall of the cylinder when the piston is brought into contact with said conical portion.

2. In a sprayer, a cylinder, a piston mounted for reciprocation therein, a spraying head secured on one end of said cylinder, said spraying head comprising an end cap, a cup held within the cap and forming a chamber between itself and the cap and an inner plate spaced from and forming an air chamber between the cup and itself, the cap and inner plate each having flanges attached to the end of the cylinder by a single seam, the inner plate having a central portion provided with a dome directed into the air chamber, said dome having an air outlet communicating with the air chamber, the cap and cup having a spray opening and air blast opening respectively, and the inner plate being provided with an angular piston-spreading surface surrounding the dome.

JOHN FITCH.