Aug. 25, 1964 A. E. MILLER 3,145,721

DEMAND VALVE

Filed Dec. 8, 1961

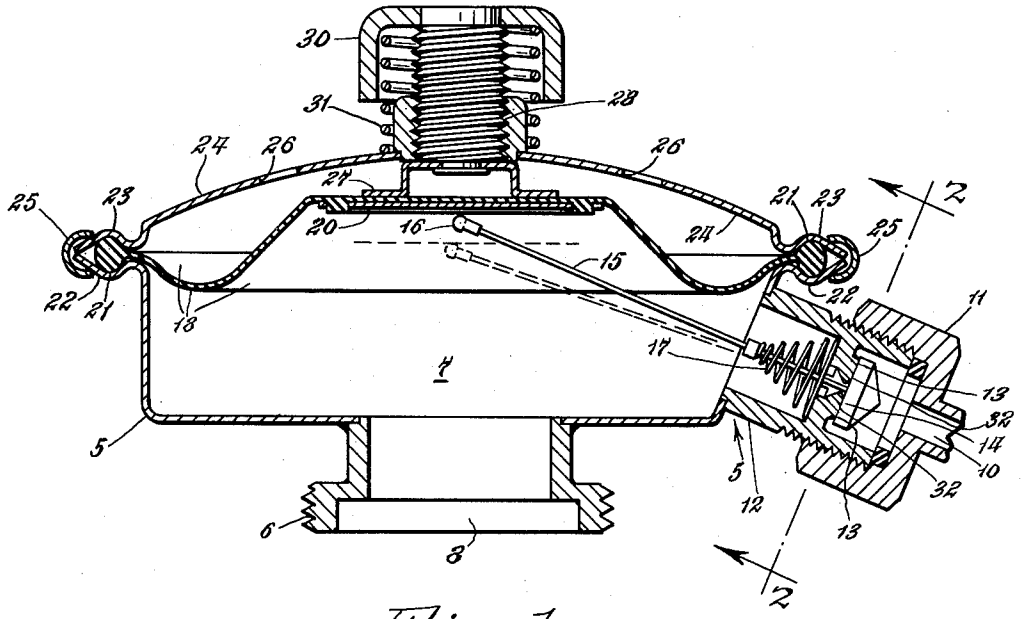

Fig. 1.

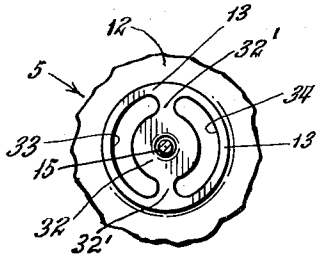

Fig. 2.

INVENTOR

Arthur E. Miller

BY Walter H. Popp.

ATTORNEY

United States Patent Office 3,145,721 Patented Aug. 25, 1964

3,145,721

DEMAND VALVE

Arthur E. Miller, Buffalo, N.Y., assignor to Scott Aviation Corporation, Lancaster, N.Y.

Filed Dec. 8, 1961, Ser. No. 158,037
2 Claims. (Cl. 137—64)

This invention relates, in a breathing apparatus, to a demand valve which, in combination with a pressure regulating casing supplied with a breathing fluid under high pressure and a diaphragm whose outer surface is exposed to the ambient atmosphere, is adapted to provide breathing fluid at low pressure whenever the person using the breathing apparatus inhales and thereby actuates said diaphragm which latter, in turn, opens said demand valve.

The primary object of the invention is to provide a demand valve which is of relatively small diameter and yet which impedes the flow of breathing fluid to a minimum extent, whenever it is opened.

Other collateral objects of the invention and practical solutions thereof are described in detail in this specification and are illustrated in the accompanying drawing, in which—

FIG. 1 is a coaxial, longitudinal section through a pressure regulating casing **5** provided with a demand valve **14** and various accessories of the latter.

FIG. 2 is a fragmentary, enlarged section thereof taken transversely of the axis of the stem **15** of the demand valve **14**, taken on line **2—2**, FIG. 1.

For efficiency, this invention will be described exactly as it is here illustrated, but it is to be definitely understood that the patentable novelty of the invention is only to be determined by the originality of the concepts disclosed and by the scope of the appended claims.

The pressure regulating casing **5** is provided with screw threads **6** to enable the breathing fluid in its breathing compartment **7** to be discharged at relatively low pressure through its outlet **8** and into the breathing mask (not shown), or into the breathing mouthpiece (not shown), that is being worn by the user of the breathing apparatus. High pressure breathing fluid is supplied to said casing **5** by a breathing fluid supply duct **10** whose pipe fitting **11** is screwed onto the outer end of a tubular boss **12** that is secured to one side of said casing **5**, and thereby, in effect, constitutes a component part of said casing.

Said casing **5**, concentrically with respect to the axis of its tubular boss **12**, is provided with an annular valve seat **13** against whose face the demand valve **14** is adapted to make contact. This demand valve **14** is provided with the usual valve stem **15** and the enlarged, spherical head **16** and is very lightly held on its seat by the usual, conical, compression spring **17**.

Adapted to tilt said valve stem **15** to the dotted line position of FIG. 1 is the usual rubber diaphragm **18** provided with the usual, metal, pressure plate **20** and also the thickened peripheral bead **21** which is clamped between the peripheral flanges **22** and **23** of the casing **5** and of its sheet metal cover **24**, respectively, by an annular clamping ring **25**. Said cover **24** is perforated at **26** so that the exterior face of said diaphragm **18** is exposed to the ambient atmosphere, while its inner face is in communication with the breathing compartment **7**.

The extreme upward movement of the diaphram **18** is adjustably limited by a sheet metal, annular, cup **27** which is riveted to the lower end of an adjusting screw **28** that is manually adjusted, rotatably, by a sheet metal, cup-shaped, adjusting head **30**. Said adjusting screw **28** is frictionally held in place in its adjusted position by a stiff, helical, compression spring **31**.

Connected integrally with the casing **5** (i.e., with its tubular boss **12**) and located within the bore of the valve

seat **13** is a web **32** which is centrally pierced to receive the stem **15** of the demand valve **14** and to thereby center said demand valve on its annular valve seat **13**. Web **32** has substantially diametrically opposed slender end portions **32'** joining the central portion of the web to the annular seat, as shown in FIG. 2. The outer flat face of said web **32** is illustrated as being co-planar with the engaging face of the valve seat **13**, but said valve seat, if desired, may be of the usual protruding ring-shape. Said valve seat is provided with a pair of kidney-shaped passageways **33** and **34** which are symmetrically disposed on opposite sides of a vertical plane that is coplanar with the axis of the demand valve **14** and its stem **15**. It is in this same vertical plane that the axes of said demand valve and its stem swing vertically as the demand valve is being opened and closed. Passageways **33** and **34** extend from one web end portion **32'** to the other, the cross sectional areas of the passageways being several times the cross sectional area of the web end portions, as shown in FIG. 2.

The advantages of this just-described arrangement are as follows: The demand valve **14**, when it opens, is caused to tilt about its uppermost point of contact with its valve seat **13**, and it is obvious that at this point there will be no flow of breathing fluid in any case, so this uppermost part of the web **32** offers no more obstruction to the flow of breathing fluid than would be if it were entirely absent. Whether the demand valve **14** has only just been cracked open, or is wide open, does not affect the fact that the interference to fluid flow is the same for small fluid flows as it is for large fluid flows. Hence, the volume of fluid flow is in substantially direct proportion to the degree of valve opening, and this is highly desirable. In addition to the foregoing, it will be noticed that there is a large, flat-faced area at the uppermost part of the valve seat **13** due to the fact that said valve seat is coplanar with the outer face of the web **32**. Hence the inner face of the demand valve **14** is less apt to become mutilated after it has been subjected to prolonged use.

I claim:

1. In a breathing apparatus having a compartment, a flexible diaphragm moved by variations in pressure in said compartment, and a valve seat having a bore communicating with said compartment, a demand valve comprising a valve head engageable with said seat, a valve centering web in said bore having an aperture coaxial with said seat, a valve stem extending from said head through said aperture for being moved by said diaphragm in a plane containing the axis of said stem to tilt said head and thereby open said valve, said web having substantially diametrically opposed slender end portions intersected by said plane, and a pair of arcuate passageways providing fluid flow through said seat when said valve is open, said passageways being symmetrically disposed on opposite sides of said plane and each extending from one of said web end portions to the other thereof, the cross-sectional area of said passageways being several times the cross sectional area of said web end portions, whereby said web end portions provide minimum restriction to fluid flow through said seat.

2. The combination of claim 1, wherein the surface of said web facing said head is coplanar with said valve seat.

References Cited in the file of this patent

UNITED STATES PATENTS

2,445,359	Meidenbauer	July 20, 1948
2,452,670	Meidenbauer	Nov. 2, 1948
2,790,454	Benzel	Apr. 30, 1957
2,843,119	Glasser	July 15, 1958