April 8, 1952 W. SAMPSON 2,591,723

LINED FURNACE WALL

Filed Sept. 23, 1946

Fig. 1.

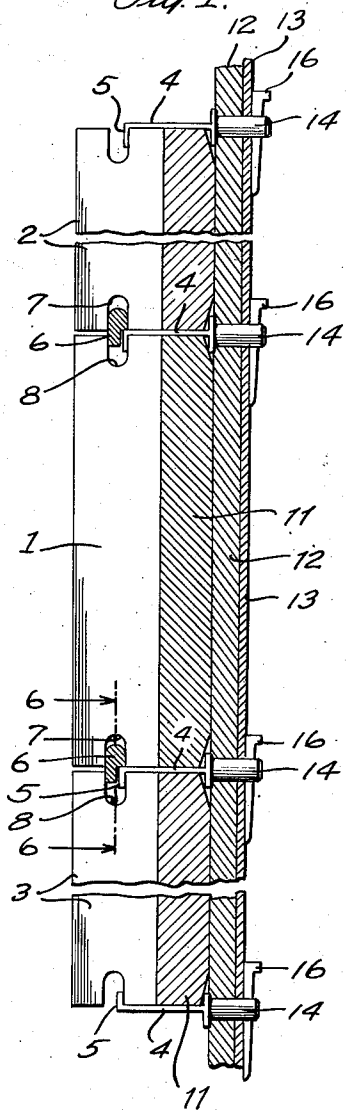

Fig. 2.

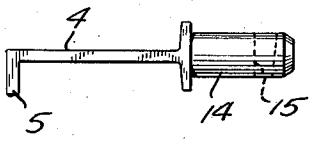

Fig. 3.

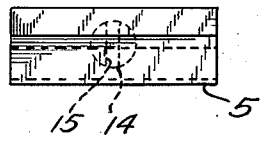

Fig. 4.

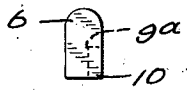

Fig. 5.

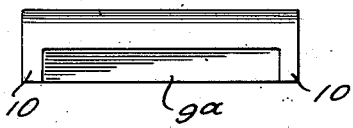

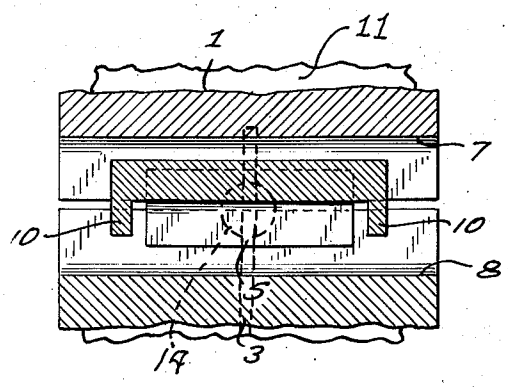

Fig. 6.

Inventor
WILLIAM SAMPSON

By E. Francis Wentworth Jr.
Attorney

Patented Apr. 8, 1952 2,591,723

UNITED STATES PATENT OFFICE

2,591,723

LINED FURNACE WALL

William Sampson, Aldwych, London, England, assignor, by mesne assignments, to Foster Wheeler Corporation, New York, N. Y., a corporation of New York

Application September 23, 1946, Serial No. 698,608
In Great Britain January 28, 1946

5 Claims. (Cl. 72—14)

1

Brick wall construction or the building of furnace linings, in steam boilers for example, has long been the subject of much investigation but so far as I am aware none of the various proposals has in practice proved entirely satisfactory.

The expedient most frequently resorted to in naval and mercantile marine boilers is to affix furnace bricks or slabs to supports by metal fastening means protected as far as possible against deterioration by heat from within the furnace during use. However whether the brick be made to enable the fastening device to pass therethrough from front to back and be subsequently covered at the front by a plastic filling, or alternatively entered into a housing from the rear of the brick, the weight of the brick is not adequately borne or supported and breakage is likely to occur.

The principal object of the present invention is to secure bricks or slabs such as referred to in a better manner than heretofore, avoiding some of the objections to known proposals while preserving or enhancing non-objectionable features.

To this end it is arranged that direct clamping to its support of one brick results in the clamping of an adjacent brick to the same support preferably through the intermediary of anchoring or keying means, hereinafter referred to as keys. The clamping means are operable from behind the wall in usual or any suitable manner and the keys are adapted to be placed in position between the bricks prior to clamping; they need not be exposed to the interior of the furnace. Preferably the keys are adapted to lessen the transmission of heat from the furnace to the clamping means.

The clamping means, and keys when employed, may be variously constituted but as furnace wall bricks having a groove formed in at least two opposite sides between the front and back faces are commonly used it will be convenient to describe by way of example with the aid of the accompanying drawings one embodiment of the invention as applied thereto from which modifications will be readily ascertainable.

In the said drawings, Fig. 1 is a transverse vertical section of part of a boiler furnace wall embodying bricks such as referred to. Fig. 2 is a view to a larger scale of one of the clamping devices of Fig. 1 alone and Fig. 3 a front view thereof. Fig. 4 is an end view of one of the keys associated with the clamping devices and Fig. 5 is a rear view of the same. Fig. 6 is a fragmentary sectional view taken on the line 6—6 of Fig. 1.

According to this example it is assumed the bricks are to be assembled in vertical rows, Fig. 1 illustrating one whole brick 1 located between

2

fragments of two bricks 2 and 3. With each brick is associated a clamp in the form of a bracket 4 upon which rests the lower grooved side of such brick, said bracket having a downwardly extending lip 5 adapted to enter the upper grooved side of a brick below.

A space exists in the juxtaposed grooves of both bricks in front of the bracket lip 5 large enough to accommodate a key 6 which when the wall is erected occupies both grooves so that the pressure exerted upon one brick say the brick 1 when clamped is transmitted from that brick through the key to the companion brick 2. The key 6 can be inserted in both grooves during erection but since it is desired to be able to replace a damaged brick by another at any time, the bottom groove 7 in each brick is made deep enough to accommodate the key 6 clear of the brick below so that the replacement brick say the brick 1 with key in position can be tilted into place. When the replacement brick 1 is home the key 6 falls by gravity partly into the top groove 8 of the brick 3 below, whereupon the clamp can be tightened to hold both bricks together. In other words the key 6 may be described as a loose metal piece Figs. 4 and 5 somewhat wider than the relatively broad metal bracket Figs. 2 and 3 which is inserted into the lower groove of the replacement brick 1 when the brick is installed. This key is so shaped and sized that it is inserted deeply into the groove 7 of the replacement brick 1 when inserting the brick. When the replacement brick 1 is so inserted that the bracket 4 carrying the brick 3 above it has its lip 5 in the upper groove 9 of the replacement brick 1 the loose key 6 in the lower and opposite groove riding deeply in the groove 7, allows the brick 1 to be put in its place until it rests on the bracket 4 provided for supporting the weight of the replacement brick. Then the loose key 6 is made to drop until it protrudes by say about half its depth into the groove 8 of the brick 3 below the replacement brick 1 thus providing what is in effect a lock preventing the brick from coming outwards.

Each brick interlocks with its neighbour above and below, but each has its own weight carrying bracket 4.

The key 6 which creates a locking arrangement of the whole wall will preferably be made of good heat resisting metal or material, so as to screen the supporting bracket against heat, and is so formed and recessed as at 9a, Fig. 5, that it fits on to the turned down lip 5 of the bracket, supporting the bricks vertically, being preferably provided with stops 10 so that it is substantially restrained from moving endwise along the brick groove, relatively to the bracket. It will be understood that the pressure applied to the brick holding it back against the face of the

supporting structure is exerted over a wide marginal region of the bricks, and there is little or no local stress at or near the center thereof, each brick being independently supported from the bottom. There is also provided ample room for brick expansion in all directions. The construction gives a very positive lock against bricks falling out from a vertical wall. The weight of each brick is carried independently on a bracket carried from the steel structure.

A brick may be broken out of the wall and a new one put in its place without disturbing any adjacent brick. If the groove runs around all four sides of the brick then the point of attachment and holding back can be located anywhere along these four sides. This enables the bricks to be cut to shape and still be supported and kept held back to the supporting structure.

If easy replacement of a damaged brick is not required, a wall can be built in which the bracket of the clamping means has an upwardly as well as a downwardly directed lip 5 to engage the brick grooves, loose keys being dispensed with, the advantage of adequate weight support of the individual bricks being retained with no brick weakening.

In other words the bracket 4, Fig. 2, will have an additional lip adapted to enter the bottom groove 7 just as is the lip 5 of the bracket 4 at the foot of Fig. 1, this bracket being the same as the other bracket of the figure but turned about its tail by 180°.

The bricks are preferably clamped against insulating material 11 of relatively soft material arranged between the bricks and a harder insulation layer 12 separating the whole from the outer casing 13, the clamping means themselves being in the form say of bracket tail pieces 14 provided with slots 15 to receive tightening wedges or cotters 16.

What I claim is:

1. In a furnace wall having a lining comprising a plurality of blocks disposed one above the other on the furnace chamber side of said wall, the lower side of a block being adjacent the upper side of the next adjacent block, said upper and lower sides each having a groove therein intermediate the opposite faces of the block and extending longitudinally of said sides, the grooves being in substantial vertical alignment, a plurality of brackets mounted on the wall and projecting therefrom toward the lining, each bracket having a supporting member in abutting relationship with the lower side of a block from the face of said block nearest the furnace wall to a point adjacent the side of said groove nearest the furnace wall, the supporting member having a lip projecting downwardly into one of the grooves and toward the inner extremity thereof, the lip engaging said side of the said groove nearest the furnace wall, said lip extending transversely of the groove to a point short of the side thereof furthest from the furnace wall, and a separate key member in the grooves, the key member comprising a body having opposite sides adjacent opposite sides of the grooves and having an upper edge and a lower edge at the upper and lower extremities of said opposite sides, the distance between said opposite edges being no greater than the depth of the groove in the lower side of a block and the distance between the opposite sides of the key member from the upper edge downwardly to a point intermediate said upper and lower edges being greater than the distance between said point short of the side of said groove furthest from the furnace wall and said side of the groove furthest from the furnace wall, said distance between the opposite sides of the key member also being such that the upper portion of the member will slidably fit the upper groove, the distance between said opposite sides from the intermediate point to the lower edge of the body being such that the lower portion of the member will slidably fit in the space between said lip and the side of the groove furthest from the furnace wall.

2. In a furnace wall having a lining comprising a plurality of blocks disposed one above the other on the furnace chamber side of said wall, the lower side of a block being adjacent the upper side of the next adjacent block, said upper and lower sides each having a groove therein intermediate the opposite faces of the block and extending longitudinally of said sides, the grooves being in substantial vertical alignment, a plurality of brackets mounted on the wall and projecting therefrom toward the lining, each bracket having a supporting member in abutting relationship with the lower side of a block from the face of said block nearest the furnace wall to a point adjacent the side of said groove nearest the furnace wall, the supporting member having a lip projecting downwardly into one of the grooves and toward the inner extremity thereof, the lip extending longitudinally of the groove in engaging relationship with the side of the groove nearest the furnace wall and extending transversely of the groove to a point short of the side thereof furthest from the furnace wall, and a separate key member in the grooves, the key member comprising a body having opposite sides adjacent opposite sides of the grooves and extending longitudinally thereof, said sides having an upper edge and a lower edge at the upper and lower extremities of said opposite sides, the distance between said opposite edges being no greater than the depth of the groove in the lower side of a block and the distance between the opposite sides of the key member from the upper edge downwardly to a point intermediate said upper and lower edges being greater than the distance between said point short of the side of said groove furthest from the furnace wall and said side of the groove furthest from the furnace wall, said distance between the opposite sides of the key member also being such that the upper portion of the member will slidably fit the upper groove, the distance between said opposite sides from the intermediate point to the lower edge of the body being such that the lower portion of the member will slidably fit in the space between said lip and the side of the groove furthest from the furnace wall.

3. In a furnace wall having a lining comprising a plurality of blocks disposed one above the other on the furnace chamber side of said wall, the lower side of a block being adjacent the upper side of the next adjacent block, said upper and lower sides each having a groove therein intermediate the opposite faces of the block and extending longitudinally of said sides, the grooves being in substantial vertical alignment, a plurality of brackets mounted on the wall and projecting therefrom in a horizontal plane toward the lining, each bracket having a supporting member in abutting relationship with the lower side of a block from the face of said block nearest the furnace wall to a point adjacent the side of said groove nearest the furnace wall, the supporting member having a lip projecting vertical-

ly downwardly into the groove in the upper side of a block and longitudinally thereof, the lip engaging the side of said last-mentioned groove nearest the furnace wall and extending transversely of the groove to a point short of the side thereof furthest from the furnace wall, and a separate key member in the grooves, the key member comprising an elongated body extending longitudinally of the grooves and having opposite sides adjacent opposite sides of the grooves and an upper edge and a lower edge at the upper and lower extremities of said opposite sides, the distance between said opposite edges being no greater than the depth of the groove in the lower side of a block and the distance between the opposite sides of the key member from the upper edge downwardly to a point intermediate said upper and lower edges being greater than the distance between said point short of the side of said groove furthest from the furnace wall and said side of the groove furthest from the furnace wall, said distance between the opposite sides of the key member also being such that the upper portion of the member will slidably fit the upper groove, the distance between said opposite sides from the intermediate point to the lower edge of the body being such that the lower portion of the member will slidably fit in the space between said lip and the side of the groove furthest from the furnace wall.

4. In a furnace wall having a lining comprising a plurality of blocks disposed one above the other on the furnace chamber side of said wall, the lower side of a block being adjacent the upper side of the next adjacent block, said upper and lower sides each having a groove therein intermediate the opposite faces of the block and extending longitudinally of said sides, the grooves being in substantial vertical alignment, a plurality of brackets mounted on the wall and projecting therefrom toward the lining, each bracket having a supporting member in abutting relationship with the lower side of a block from the face of said block nearest the furnace wall to a point adjacent the side of said groove nearest the furnace wall, the supporting member having a lip projecting downwardly into one of the grooves toward the inner extremity thereof, the lip extending longitudinally of the groove in engaging relationship with the side of the groove nearest the furnace wall and extending transversely of the groove to a point short of the side thereof furthest from the furnace wall, and a separate key member in the grooves, the key member comprising a body of a length greater than the length of said lip and having opposite sides adjacent opposite sides of the grooves, said sides having an upper edge and a lower edge at the upper and lower extremities of said opposite sides, the distance between said opposite edges being no greater than the depth of the groove in the lower side of a block and the distance between the opposite sides of the key member being greater than the distance between said point short of the side of said groove furthest from the furnace wall and said side of the groove furthest from the furnace wall, said distance between the opposite sides of the key member also being such that the member will slidably fit in the grooves, the key member being recessed from a point intermediate said upper and lower edges to said lower edge, said recess extending into the body of the key from the side thereof nearest the furnace wall to a point short of the opposite side of the member and for a distance no less than the distance the bracket lip projects into said groove and lengthwise of the body member from points in spaced relationship with the opposite ends thereof for a distance no less than the length of the lip.

5. In a furnace wall having a lining comprising a plurality of blocks disposed one above the other on the furnace chamber side of said wall, the lower side of a block being adjacent the upper side of the next adjacent block, said upper and lower sides each having a groove therein intermediate the opposite faces of the block and extending longitudinally of said sides, the grooves being in substantial vertical alignment, a plurality of brackets mounted on the wall and projecting therefrom in a horizontal plane toward the lining, each bracket having a supporting member in abutting relationship with the lower side of a block from the face of said block nearest the furnace wall to a point adjacent the side of said groove nearest the furnace wall, the supporting member having a lip projecting vertically downwardly into the groove in the upper side of a block and longitudinally thereof, the lip engaging the side of said last-mentioned groove nearest the furnace wall, said lip extending transversely of the groove to a point short of the side thereof furthest from the furnace wall, bracket securing means acting upon a bracket and on the side of the wall opposite said furnace side to maintain the lip in engagement with the side of a groove nearest the furnace wall, and a separate key member in the grooves, the key member comprising an elongated body extending longitudinally of the grooves, the body having opposite sides adjacent opposite sides of the grooves and an upper edge and a lower edge at the upper and lower extremities of said opposite sides, the distance between said opposite edges being no greater than the depth of the groove in the lower side of a block and the distance between the opposite sides of the key member being greater than the distance between said point short of the side of said groove furthest from the furnace wall and said side of the groove furthest from the furnace wall, said distance between the opposite sides of the key member also being such that the member will slidably fit in the grooves, the key member being recessed from a point intermediate said upper and lower edges to said lower edge, said recess extending into the body of the key from the side thereof nearest the furnace wall to a point short of the opposite side of the member and for a distance no less than the distance the bracket lip projects into said groove and lengthwise of the body member from points in spaced relationship with the opposite ends thereof for a distance no less than the length of the lip.

WILLIAM SAMPSON.

REFERENCES CITED

The following references are of record in the file of this patent:

UNITED STATES PATENTS

Number	Name	Date
1,197,842	Meier	Sept. 12, 1916
1,948,798	Nygaard	Feb. 27, 1934
2,044,637	Ross	June 16, 1936
2,460,052	Werner	Jan. 25, 1949