June 7, 1938. M. M. CLAYTON 2,119,776

OUTLET DUCT

Original Filed Oct. 28, 1935 2 Sheets-Sheet 1

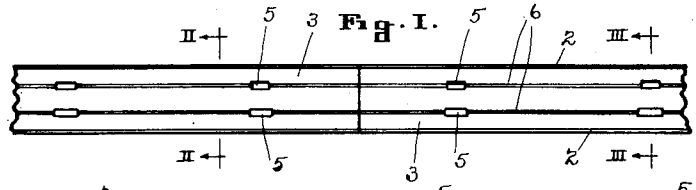

Fig. I.

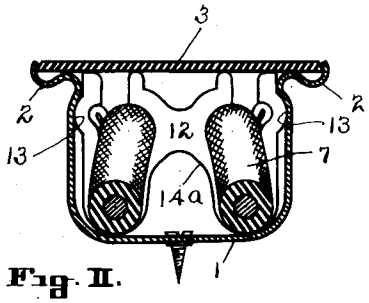

Fig. II.

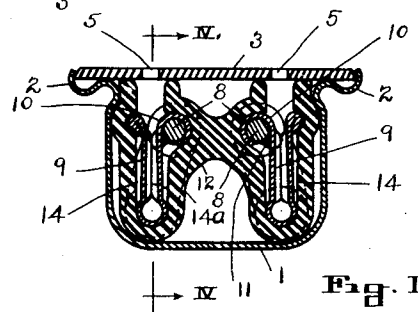

Fig. III.

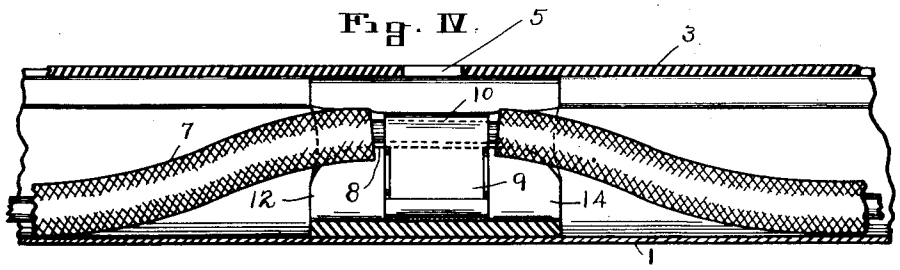

Fig. IV.

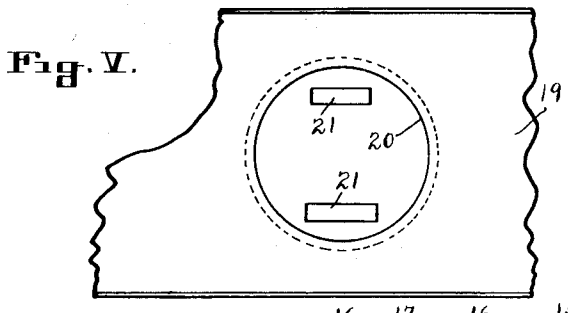

Fig. V.

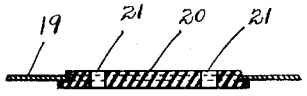

Fig. VI.

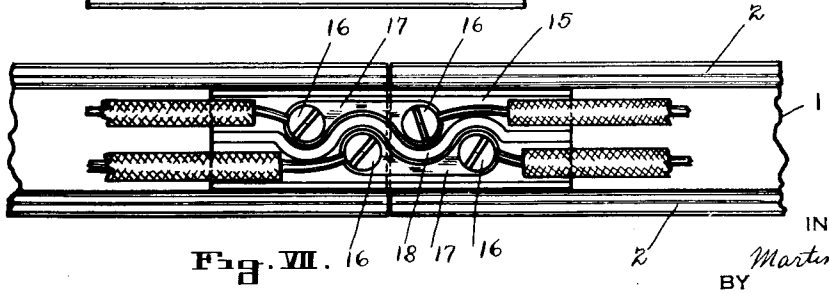

Fig. VII.

INVENTOR
Martin M. Clayton
BY
Christy and Wharton
ATTORNEYS

June 7, 1938. M. M. CLAYTON 2,119,776

OUTLET DUCT

Original Filed Oct. 28, 1935 2 Sheets-Sheet 2

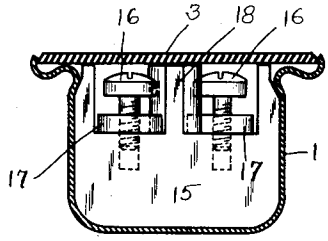

Fig. VIII.

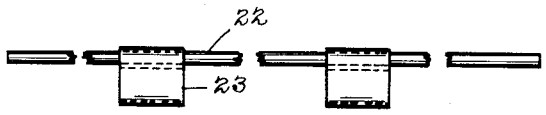

Fig. IX.

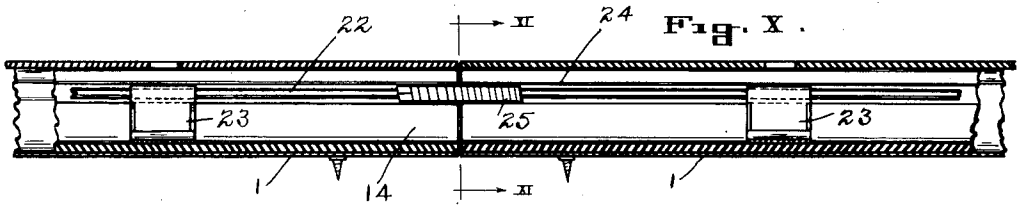

Fig. X.

Fig. XI.

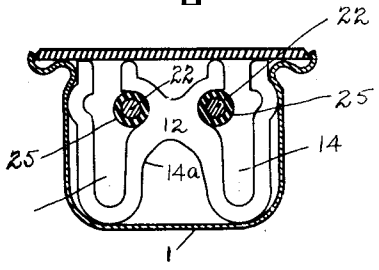

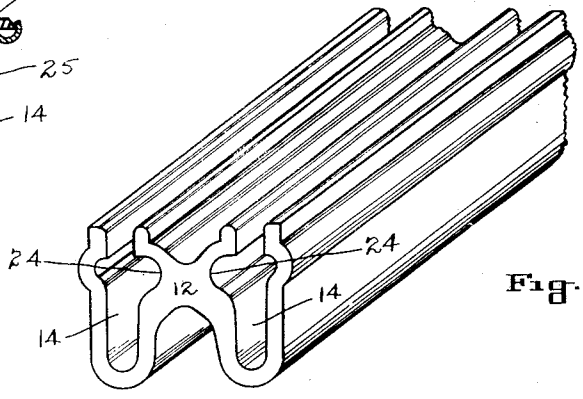

Fig. XII.

INVENTOR
Martin M. Clayton
BY
Christy and Wharton
ATTORNEYS

Patented June 7, 1938 2,119,776

UNITED STATES PATENT OFFICE

2,119,776

OUTLET DUCT

Martin M. Clayton, Baden, Pa., assignor to National Electric Products Corporation, Pittsburgh, Pa., a corporation of Delaware

Application October 28, 1935, Serial No. 47,064
Renewed November 2, 1937

3 Claims. (Cl. 247—3)

This invention relates to an outlet duct or raceway for use in the baseboards or walls of buildings, and for mounting in various sorts of equipment such, for example, as kitchen and pantry sinks, laboratory desks, and the like. Specifically, it relates to an outlet duct, so constructed and wired that frequent outlets are provided for the reception of attachment plugs, so that current may be taken off at selected points to energize lights, or other electrical appliances.

The primary object of my invention is to provide a raceway in which simple conducting wire, either insulated or uninsulated, is used, and in which receptacles of simple and unspecialized structure are used.

Another object of my invention is to obtain the above advantages in conjunction with conductors of such nature that electrical connection between the duct lengths, in providing an extended and continuous raceway, may readily and competently be made.

Still another object of my invention is to retain in a raceway of lessened cost the pleasing appearance of the most desirable forms of multiple outlet raceway.

In the accompanying drawings Fig. I is a plan view of my raceway, illustrating an identity of my raceway in external appearance with the raceway shown and described in United States Patent No. 1,955,168, issued April 17, 1934, to Charles G. Beersman.

Fig. II is a cross-sectional view through my raceway, on an enlarged scale, taken on the plane II—II of Fig. I, and illustrating the structure and arrangement interiorly of the raceway in conductive intervals between outlet regions.

Fig. III is a cross-sectional view, on the scale of Fig. II, taken on the plane III—III of Fig. I, and illustrating the interior structure and arrangement of the raceway in the outlet regions of the raceway.

Fig. IV is a view in longitudinal, vertical section, on the scale of Figs. II and III, and taken on the plane IV—IV of Fig. III.

Fig. V is a fragmentary plan view, illustrating a modification in the structure of the duct cover.

Fig. VI is a transverse, sectional view through the structure shown in Fig. V.

Fig. VII is a plan view of a region of my raceway, in which two lengths of raceway are brought into abutment and electrically connected, the raceway cover being in this figure of the drawings omitted.

Fig. VIII is a cross-sectional view through the raceway, showing in end elevation the connecting block for making electrical connection between lengths of raceway shown in plan view in Fig. VII.

Fig. IX is a side elevation, showing an uninsulated conductor arranged to make contact with outlet plugs at the outlet points of my raceway.

Fig. X is a view of the raceway, taken in vertical, longitudinal section, showing the position and connection of the bare conducting wire shown in Fig. IX.

Fig. XI is a cross-sectional view through my raceway, utilizing bare conducting wire, taken on the plane XI—XI of Fig. X.

Fig. XII is an isometric, detail view of a compressible contoured insulation suitable for use as an element of my raceway assembly, and incorporated, either in the form of short blocks or continuous strips, in the raceway as shown in the preceding figures of the drawings.

The raceway of my invention comprises a duct body 1, formed in length to provide a trough for the reception of conductive parts and insulation, and is of simple trough form in its lower region. At its upper edges duct 1 is formed to provide a horizontally disposed S-curve 2 for the reception and engagement of a cover strip 3, and for the engagement of the insulating filler 4.

Referring initially to Figs. I to IV, inclusive, of the drawings, the raceway cover is a plurality of flat strips of some suitable insulating material, such as micarta. At spaced intervals, the cover strips 3 are provided with pairs of spaced slots 5 to receive the contact prongs of a plug. If desired, longitudinal, parallel grooves 6 may extend between pairs of prong openings 5 to guide the prongs into the prong openings. The provision of such grooves is in accordance with United States Patent No. 1,955,168, to which reference has been above made. As positioned on duct 1, the cover strips 3 are resiliently engaged along their lateral edges by the lips of the S-curve 2 formed along the lateral edges of the duct 1. Considering the structure as thus assembled, it remains to provide suitably insulated conductors in the raceway, and to provide contact elements of adequate contact area, and accurately positioned with respect to the slots 5 through which contact prongs may be inserted into the raceway.

As a conductor I use, in the showing of Figs. I to IV of the drawings, insulated wire 7 of usual structure. At intervals spaced to conform to the prong-receiving slots 5 in cover strips 3 the insulation is stripped from a relatively short length of the wire, and to the bare region 8 of wire thus exposed there is soldered, or otherwise securely

and electrically connected, a spring contact clip 9. As shown particularly in Figs. III and IV of the drawings, one terminal 10 of the spring contact clip is formed to provide a curved channel embracing the conducting wire throughout a substantial portion of its periphery. By applying a seal 11 of solder or the like in this region, the clip is mounted by a firm conductive attachment on the wire, with the clip providing a contact socket depending from the wire.

In order to position the contact clips 9 accurately with respect to the spaced prong openings 5, and definitely to insulate the bared regions of the wires and the contact clips from the walls of the duct, an insulating body or filler block 12 is inserted in the duct in each of the outlet regions thereof. As a filler block I prefer to use a contoured length of compressible rubber, such as that shown in Figs. II, III, and IV of the drawings. This contoured block has along the sides thereof projections 13, which may engage beneath the inner bend of the S-curves formed along the lateral edges of the duct, and which with conductor wires and contact clips mounted in the block frictionally engage the walls of the duct body.

The insulating and mounting body 12 has downwardly extending slots 14 to receive the contact clips 9, and is longitudinally recessed from these slots 14 to provide seats for the conducting wires 8 from which the contact clips depend. Desirably, but not necessarily, longitudinal recesses 14a are also formed in the body 12 to increase the compressibility of the body. As then formed oversize, the mounting body 12 may be so compressed within the duct as to provide a firmly fixed mounting at the outlet regions of the conductors.

As thus assembled, my raceway, utilizing common conducting wires, is capable of presenting to the prongs of a plug inserted through the cover contact means presenting adequate contact area to the plug prongs, and definitely and accurately positioned with respect to the points of entry of the plug prongs. This effect is obtained by means of a prepared conductor, requiring no specialized receptacle structure, and requiring no wiring in installation of the raceway.

Referring to Fig. VII of the drawings, one simple manner in which electrical connection between lengths of raceway may be made with the unspecialized conducting wire utilized is there illustrated. As shown, a molded block 15, of suitable insulating material, is provided with four binding posts 16, and is recessed to receive the wires and short conducting bars 17. In the block, the terminals of the parallel conductors are separated by a sinuous barrier 18. As positioned to bridge the joint between lengths of raceway, this connector provides adequate insulation for the bared terminals of the conducting wires, and also provides secure and readily effected electrical connection.

Figs. V and VI of the drawings show a modification in the cover of the raceway. In this modification, the cover 19 is formed of metal; and the cover being thus of conductive material, outlet through the cover is provided by circular plates or buttons 20 of insulating material, which are mounted in openings in the cover, and which have therein spaced slots 21 for the entry of contact prongs.

Fig. X of the drawings shows a bare wire 22, which has attached thereto contact clips 23, identical in general form with the contact clips 9 shown in preceding figures of the drawings. In Fig. X the installation of this bare wire conductor is illustrated. In mounting the conductors in the duct, a rubber strip, similar in contour to the block 12, shown in Figs. II, III, and IV of the drawings, is set in the duct and desirably is coextensive in length with the length of the duct section. Into this insulating strip the conductor is set, with the contact clips 23 extending into the vertical slots 14, and with wires lying in the longitudinal seating recesses 24. Whether the conductor be cut in lengths equal to the length of the duct sections and insulating strip sections, or whether the wire be made to extend continuously throughout the entire length of the raceway, proper spacing of the contact clips on the wire of the conductor renders it simple to position the contact clips accurately with respect to the prong-receiving slots of the raceway cover. At the joint between abutting raceway sections, it is desirable when using a conductor continuous throughout the assembled raceway to bridge the joint between the sections of the insulating filler by covering the wire with applied insulation, as, for example, insulating tape 25.

Referring to Fig. XII of the drawings, it will be seen that the insulating filler of compressible rubber is of uniform cross-sectional contour throughout its length. It may, therefore, be made as an extruded form, and cut into suitable strips or blocks for use in the assemblies respectively shown in Fig. IV and in Fig. X. The insulated conductor of Figs. II to IV, inclusive, may, if desired, be mounted in strips of insulation as shown in Fig. X, rather than in blocks of insulating material; and either form of conductor may be used in a multiple outlet duct of the nature described in association with any adequate insulating and contact-positioning means.

In my outlet duct or raceway I have succeeded in simplifying both the manufacture and installation of the raceway without sacrifice of safety, conductivity, or appearance.

An important advantage of my outlet duct or raceway is that it may be made up complete in sections of relatively great length, and may be cut at any point between the outlet regions to fit particular installation requirements. This arises from the fact, noted above, that the simple conductors employed are susceptible of ready and simple interconnection between lengths of the raceway, it being unnecessary to make short filler lengths of raceway with a fixed connecting block in each.

I claim as my invention:

1. In a multiple outlet duct comprising a trough and a cover having prong-receiving openings provided therein at spaced intervals, means for mounting conventional conductor wire having spaced contact clips thereon in said duct formed as members of resilient insulating material spaced from each other in the duct trough in registry with the prong-receiving openings of the duct cover, the said members being provided with means arranged to receive and in assembly resiliently to engage the conductor wire and the clips.

2. In a multiple outlet duct comprising a trough and a cover having prong-receiving openings provided therein at spaced intervals, means for mounting conventional conductor wire having spaced contact clips thereon in said duct formed as members of resilient insulating material spaced from each other in the duct trough in registry with the prong-receiving openings of the

duct cover, the said insulating members being provided with means in assembly both to receive and resiliently to engage the conductor wire and clips and in receiving them to be forced into frictional engagement with the walls of the trough.

3. In a multiple outlet duct comprising a relatively rigid trough and a cover therefor having prong-receiving openings provided therein at spaced intervals, means for mounting parallel unspecialized conductor wires carrying spaced contact clips in said trough, said mounting means being lengths of resilient insulating material formed each substantially to fill the cross section of the duct trough and formed each to provide of itself parallel channels of substantial depth arranged to receive the unspecialized conductor wires and their contact clips, the said lengths of resilient insulating material being formed resiliently to engage and in insulated position to house the conductor wires throughout each length of the said resilient insulating material.

MARTIN M. CLAYTON.