Dec. 31, 929. P. HUNTER 1,741,717

INVALID'S COT

Filed Oct. 13, 1927 2 Sheets-Sheet 1

Fig. 1.

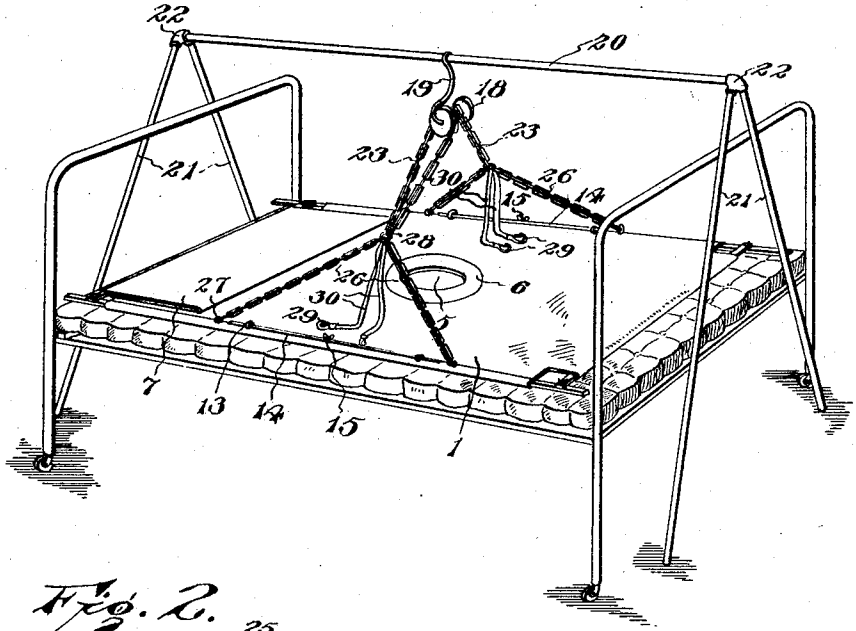

Fig. 2.

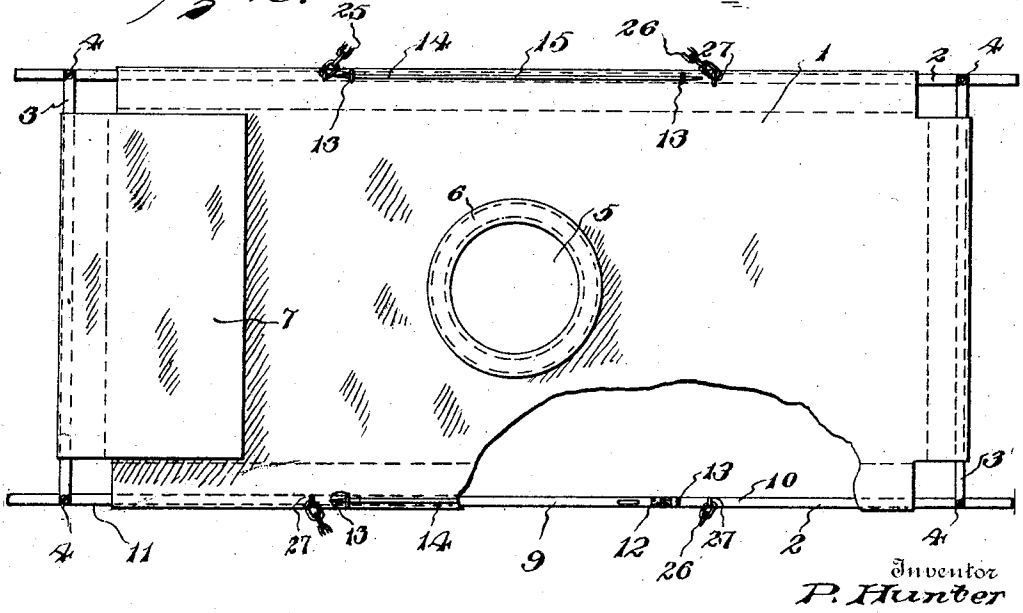

Inventor
P. Hunter

By Lacey & Lacey, Attorneys

Dec. 31, 1929. P. HUNTER 1,741,717

INVALID'S COT

Filed Oct. 13, 1927 2 Sheets-Sheet 2

Fig. 3.

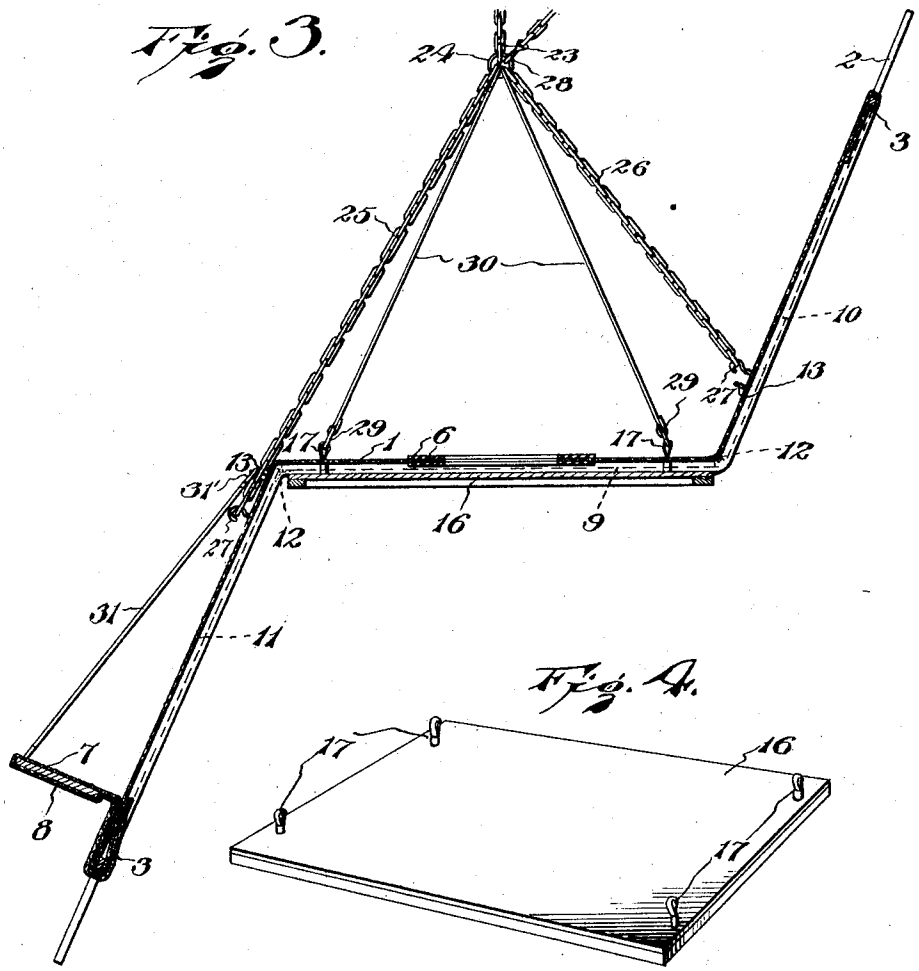

Fig. 4.

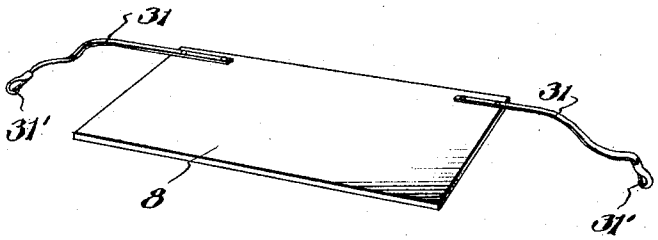

Fig. 5.

Fig. 6.

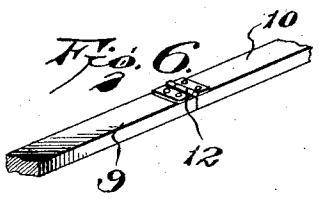

Inventor
P. Hunter

By Lacey & Lacey, Attorneys

Patented Dec. 31, 1929 1,741,717

UNITED STATES PATENT OFFICE

PHILINDA HUNTER, OF MARION, ILLINOIS

INVALID'S COT

Application filed October 13, 1927. Serial No. 225,994.

This invention relates to furniture and more particularly to a cot intended to be used by invalids who are confined to a bed or can only be temporarily removed from a bed and placed in a wheel chair.

One object of the invention is to provide a cot which may rest flat upon a bed beneath a patient and may be lifted from the bed by suitable hoisting mechanism so that sheets may be conveniently changed without causing pain to the patient or the patient temporarily lifted from the bed in order to afford relief from constant lying upon a mattress with resulting danger of bed sores being formed.

Another object of the invention is to permit the cot to be folded into a chair formation so that when lifted from the bed the patient may assume a seated position and thereby be easily lowered into a rolling chair or, if desired, remain in the cot which will be suspended in the chair formation from an overhead support.

Another object of the invention is to provide a seat board which may be placed beneath an intermediate portion of the cot and engaged with the hoisting mechanism so that the patient will be well supported when lifted in a seated position.

Another object of the invention is to provide an improved foot rest which is well supported and upon which the feet of the patient will rest while seated.

The invention is illustrated in the accompanying drawings, wherein

Figure 1 is a perspective view showing the invalid's cot in operation relative to a bed;

Fig. 2 is a top plan view of the cot;

Fig. 3 is a vertical sectional view showing the cot suspended in a chair forming position;

Fig. 4 is a perspective view of the seat board;

Fig. 5 is a perspective view of the foot board, and

Fig. 6 is a perspective view showing the manner of hingedly connecting sections forming a side bar of the cot frame.

The improved invalid's cot includes a fabric sheet 1 formed of canvas or any other strong fabric desired and along its sides and upper and lower ends is formed with pockets to receive the side bars 2 and end bars 3 of a frame. The side and end bars of the frame may be formed of wood or metal and are releasably secured together by bolts 4 having winged nuts so that they may be easily released and the side and end bars slid out of the pockets when it is necessary to substitute a new sheet or body 1 and laundry the one previously in use. An opening 5 is formed in the sheet intermediate its length and width and this opening is bordered by circular reinforcing strips 6 which protect the margins of the opening and prevent them from fraying out and also prevent danger of the sheet tearing at the opening. By referring to Fig. 3, it will be seen that the lower end portion of the sheet or fabric body is folded back upon itself and secured to form not only a lower pocket to receive the lower cross bar 3 but also a pocket 7 which may extend outwardly and receive a foot board 8.

The side bars 2 of the frame each consists of an intermediate section 9 and upper and lower end sections 10 and 11, which are hingedly connected, as shown at 12, so that the upper section of the frame may be swung upwardly and the lower section downwardly and thereby cause the cot to assume a formation resembling a chair when so desired and support the patient in a seated position. Eyes 13 are carried by the end sections adjacent their inner ends and project upwardly through openings formed in the side pockets of the fabric body. These eyes extend transversely of the body and are intended to receive rods 14 which are of greater length than the intermediate portion and when in place serve to prevent the upper and lower sections from folding and assuming a chair forming position when the cot is lifted. The rods are preferably formed of metal so that they will have sufficient strength to prevent them from being bent or broken when in use and each carries a set screw 15 which, when tightened, will bear against the intermediate section of a side bar and apply pressure which will prevent the rod from slipping out of the eyes into which it fits. I have also provided

a seat board 16 which may be formed of wood and in dimensions approximately corresponds to the intermediate section of the cot. This seat board is intended to be placed beneath the cot, as shown in Fig. 3, and carries snap hooks 17 which are intended to pass upwardly through the cot, as shown in Fig. 3, when the seat board is in use.

In order to lift the invalid's cot, I employ hoisting mechanism including a pulley wheel 18 which is rotatably carried by a hanger 19 adapted to be suspended from an overhead support above the bed. In the present illustration, the hanger is suspended from a tripod including a bar 20 to which the hanger is attached and supporting legs 21 which converge upwardly and are connected with the ends of the bar 20 by couplings 22. The bar 20 extends longitudinally of the bed, and from an inspection of Fig. 1 it will be readily seen that when the cot is lifted the bed may be easily slid transversely from beneath the tripod. It will be obvious that, if desired, the hanger 19 could be engaged with an eye bolt screwed into a ceiling beam disposed above the bed or with any other suitable support strong enough to carry the weight of the cot and a patient resting thereon. Chains 23 are passed about the pulley and each chain has one end engaged with a ring 24 from which extend chains 25 and 26, the lower ends of which are to have selected links engaged with the hooks 27. The other ends of the chains 23 carry hooks 28 which may be engaged in the rings 24 or selected links of the chains 23. It will thus be seen that by pulling upon the chains 23 to draw them over the pulley the cot may be lifted from the bed and by engaging the hooks 28 in the rings 24 or links of the chains 23 the cot may be suspended at a desired height. Sheets may then be very easily changed and the patient then again lowered upon the bed or the patient may be allowed to remain suspended upon the cot in order to allow the bed to be aired and also to relieve the patient from continually lying upon a bed with the resulting danger of bed sores being formed.

When it is desired to place the patient in a rolling chair which may be of a conventional construction or may merely consist of an ordinary dining room chair having casters applied to the lower ends of its legs, the cot is first elevated with the rods 14 in place and the seat board 16 placed beneath the intermediate section of the cot. The cot is then again lowered until it rest upon the seat board and the hooks 17 thereof project upwardly through the cot. The rods are then removed and the rings 29 carried by the straps or small chains 30 which are suspended from the rings 24 are engaged with the hooks 17. The foot board 8 is passed through the pocket 7 which is to extend outwardly from the cot, as shown in Fig. 3, and the hooks 31′ at the ends of the bracing straps 31 carried by the foot board are engaged with the eyes 13 carried by the lower sections 11 of the side bars. After the seat board and the foot board are in place, the chains 23 are again drawn upon to lift the cot and as the cot is elevated the bed may be slid transversely from beneath the cot. The pull upon the chains 26 will cause the upper end portion of the cot to be swung upwardly and form the back of a chair and the lower end portion of the cot will swing downwardly so that the patient's feet may rest upon the foot board. It will thus be seen that the patient will be suspended in a seated position and may then be easily lowered onto a wheel chair or if so desired the patient may remain seated in the cot while it is suspended from the overhead support. The cot may, therefore, be employed to lift the patient in a reclining position or it may support the patient in a seated position. Since the links of the chains 25 and 26 are selectively engaged with the hooks 27, the incline of the back and leg supporting portion of the chair may be controlled.

Having thus described the invention, I claim:

1. A device of the character described comprising a foldable frame including end bars and side bars removably connected therewith, the side bars each including an intermediate section and end sections pivoted thereto, a sheet having pockets along its margins to receive said side and end bars, releasable means to prevent folding of the side bars, a seat to be disposed beneath the sheet and intermediate sections of the side bars, and a hoist engageable with an overhead support and releasably engageable with the seat and end sections of the side bars.

2. A device of the character described comprising a foldable frame including end bars and side bars removably connected therewith, the side bars each including an intermediate section and end sections pivoted thereto, a sheet having pockets along its margins to receive said side and end bars, releasable means to prevent folding of the side bars, a seat to be disposed beneath the sheet and intermediate sections of the side bars, and a hoist including a pulley engageable with an overhead support and cables trained about the pulley and having end portions engageable with the seat and side bars.

In testimony whereof I affix my signature.

PHILINDA HUNTER. [L. S.]