April 29, 1958 M. G. BAUMGARTNER 2,832,517

CONTAINER FOR LIQUID SOAP, DETERGENTS, AND THE LIKE

Filed Nov. 9, 1956

FIG. 1

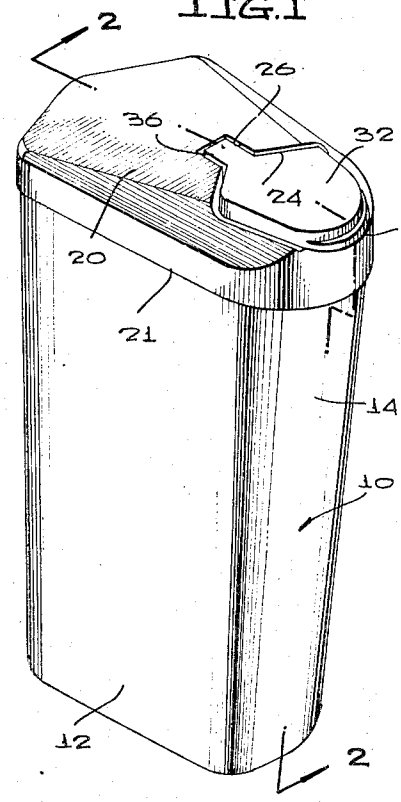

FIG. 2

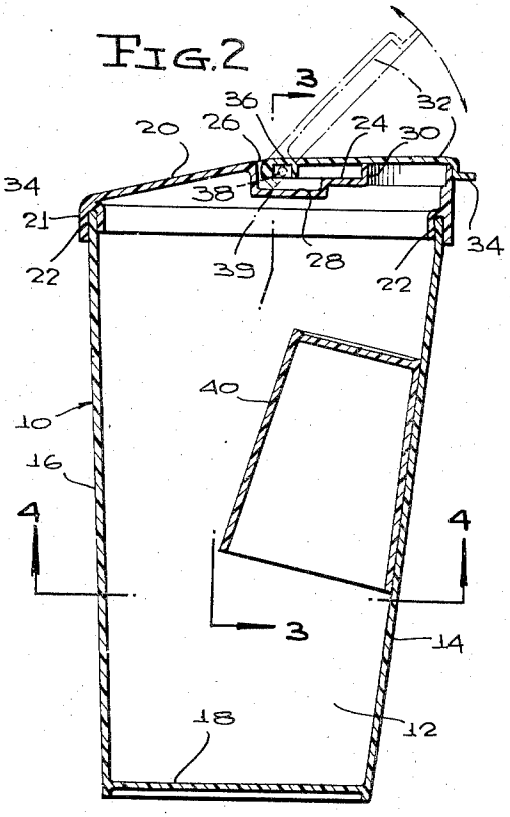

FIG. 3

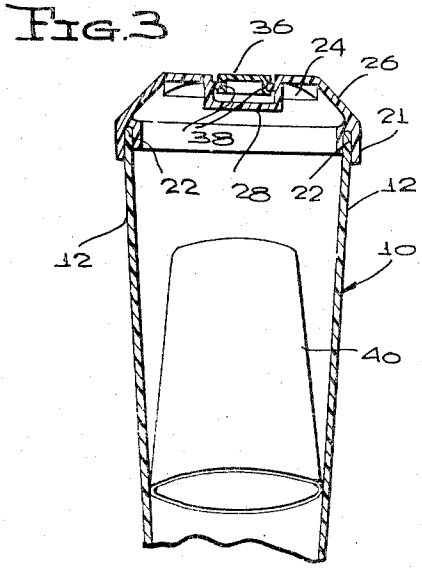

FIG. 4

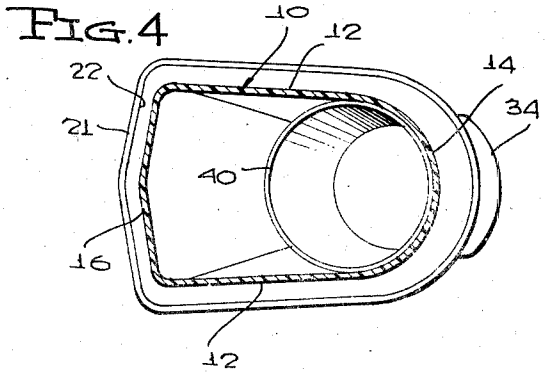

INVENTOR.
MARSHALL G. BAUMGARTNER
BY

McMorrow, Berman & Davidson
ATTORNEYS

United States Patent Office 2,832,517 Patented Apr. 29, 1958

2,832,517

CONTAINER FOR LIQUID SOAP, DETERGENTS, AND THE LIKE

Marshall Gale Baumgartner, Fort Wayne, Ind.

Application November 9, 1956, Serial No. 621,282

2 Claims. (Cl. 222—545)

This invention relates to containers, and more particularly, has reference to a container which is particularly intended for us in holding liquid soaps and various other liquid cleansers, including detergents and related compounds. The container, however, may have other uses, and except as necessarily required by the scope of the appended claims, it is not intended to be limited to the particular uses specified.

Most usually, soaps or detergents are sold in cans, bottles, or boxes, according to whether the material is liquid or granular. These containers are rather unsightly, due to the fact that they contain advertising, etc. The main object of the present invention, accordingly, is to provide a container which will be designed to be sold with a suitable set of ingredients confined therein, which ingredients can be mixed by the housewife for the purpose of providing a predetermined quantity of liquid soap or detergent. In this way, the container, which itself has an attractive exterior appearance, can be left in a visible location within the kitchen, without detracting from the appearance of the kitchen, as compared to the cans, bottles, of boxes in which detergents or soaps are regularly merchandized. Further, the arrangement permits a considerable saving to be effected by the housewife, by reason of her being permitted to mix her own ingredients.

A more specific object of the invention is to provide a container having a novelly shaped relative arrangement of a body, a lid, a cap carried by the lid, and a baffle means in the form of a tumbler.

Another object is to permit the device to be made entirely from a slightly flexible plastic, such as polyethylene.

Yet another object of importance is to provide a device of the character stated that will be capable of manufacture at relatively low cost, will be capable of reuse an indefinite number of times as distinguished from the disposable containers in which soaps or detergents are usually sold, and will facilitate the use of liquid soaps, with accompanying reduction in wastage and with maximum efficiency in the use of the soap or detergent.

Still another object of importance is to provide a device of the character stated that will be compact, so as to permit its storage in a relatively small space, while yet holding a substantial quantity of soap or detergent.

Other objects will appear from the following description, the claims appended thereto, and from the annexed drawing, in which like reference characters designate like parts throughout the several views, and wherein:

Figure 1 is a perspective view of a container according to the present invention;

Figure 2 is a sectional view therethrough on line 2—2 of Figure 1, the dotted lines showing the cap in open position;

Figure 3 is a sectional view on line 3—3 of Figure 2; and

Figure 4 is a transverse sectional view on line 4—4 of Figure 2.

The detergent container includes a hollow, upwardly

opening body portion generally designated **10**, formed of plastic material. Preferably, the body portion is of a flexible plastic such as polyethylene.

The container includes flat, upwardly diverging side walls **12** and front and back walls **14** and **16** respectively, which also diverge upwardly from a flat bottom wall **18**.

A lid **20** is also preferably molded from polyethylene. Lid **20** is integral with a depending peripheral flange **21**, having a continuous, downwardly opening groove **22** receiving the upper end of body portion **10**.

As shown in Figures 2 and 3, the lid inclines upwardly from back wall **16** toward the front wall. Further, the lid is preferably formed with sloped sides as shown in Figure 3, disposed at opposite sides of a flat front portion. The front portion of the lid has a substantially centrally located depression **24**, merging at its rear end into a shallow recess **26** the bottom **28** of which is offset downwardly from the bottom of the depression **24** as shown in Figure 2.

Projecting upwardly from the front portion of the bottom wall of depression **24** is a generally circular spout **30**. The top edge of which is engaged by a flat cap **32** integrally formed on its front edge with a forwardly projecting lip **34** that provides a handle.

At its rear end cap **32** is integrally formed with a tongue **36** disposed within recess **26**. Tongue **36** has depending side walls formed with transversely aligned openings receiving lugs **38** that project inwardly from the side walls of recess **26**.

The cap is thus mounted on the lid for swinging movement between its closed and open positions shown in Figure 2.

When the cap is opened the back edge thereof, being somewhat flexible due to the material of which the cap is formed, is slightly deformed at a location designated **39** in Figure 2, so as to be placed in engagement with the bottom of recess **26**, thereby to permit the cap to be swung upwardly beyond its dotted line position of Figure 2. When the cap is swung upwardly to its maximum extent, it will remain in open position due to the fact that the back wall of tongue **36** will bear against the bottom **28** of the recess **26**.

Normally disposed within body portion **12** is a tumbler **40**, also of polyethylene material. This may be used for mixing the ingredients used in making the soap or detergent, and normally is inverted within the body portion with its side wall in engagement with front wall **14**. The flexible material of which the cup is formed permits the same to be slightly compressed transversely thereof when it is inserted in the body portion so that it will frictionally bind against the side wall **12**, to be held in the illustrated position. It will be noted from Figure 4 that front wall **14** is transversely curved through substantially 180 degrees on a radius substantially equal to that of the larger end of the cup, so that the cup will frictionally engage the wall of the container through one-half the circumference of the cup.

The tumbler **40** may be left in the container in the position shown, for the purpose of providing a baffle to prevent sediment or other solid particles from coming out of the spout. This will be apparent from Figures 2 and 4, from which it is readily seen that when the container is tilted for pouring of the contents, the liquid will be required to flow over the tumbler while solid particles will tend to pass into the tumbler, thus to be prevented from movement out of the container.

While as previously mentioned the container has general utility as a holder for liquids, it is proposed that it be particularly used for the manufacture, storage and dispensing of liquid soap or detergent.

One might accordingly merchandise the ingredients for

the mixture within the container, in an unmixed state. Predetermined quantities of the various ingredients may thus be packaged in individual bottles, sacks or other containers to be packed within the illustrated container. Thereafter, the purchaser would mix the ingredients, following directions provided with the product when sold and in this way obtain a quantity of liquid detergent at a substantially lower cost than would be involved were the detergent sold already mixed.

A typical mixture might be made as follows:

First, one would pour 2 ounces of alcohol into the container, after which a cake of soap or three ounces of detergent would be deposited therein and the container filled with hot water. Lid 20, which would have been removed while the ingredients were poured into the container, would then be replaced with the cap closed. The closed container would then be shaken vigorously to fully mix the alcohol with the water and would be permitted to set for a period of 24 hours.

The cap **32**, when swung upwardly, can be readily removed from the lid by transversely compressing the tongue **36** to disengage the lugs **38** from the recesses provided therefor. The cap may then be used as a measure, with 2 capsful being used for each gallon of hot water required in dishwashing and similar household duties.

When detergent is used as a base ingredient instead of soap, alcohol is unnecessary. In any event, the liquid soap or detergent permits a substantial quantity of either of these products to be made at low cost. Further, the use of liquid of this type provides an additional saving in that maximum efficiency and a minimum amount of waste results as compared to the use of granulated soap or detergent. Also, even if cold water is used, a liquid soap or detergent will permit articles to be washed easily and quickly.

The device illustrated may be left in a convenient, exposed position in the kitchen and does not detract from the appearance of the furnishings, as distinguished from ordinary containers or packages of granulated soap or detergents.

The particular location of the baffle is also of importance, as previously noted herein. In this connection, the body of the container is particularly formed to insure that the tumbler will be firmly gripped thereby, and at the same time, said container body has a shape that permits the same to be comfortably held. One holds the container at the back end thereof, and the tendency will be to grasp the container at a location such that the grip of

the hand will be off center, so as to facilitate pouring when the container is tilted.

It is believed apparent that the invention is not necessarily confined to the specific use or uses thereof described above, since it may be utilized for any purpose to which it may be suited. Nor is the invention to be necessarily limited to the specific construction illustrated and described, since such construction is only intended to be illustrative of the principles of operation and the means presently devised to carry out said principles, it being considered that the invention comprehends any minor change in construction that may be permitted within the scope of the appended claims.

What is claimed is:

1. A container comprising an upwardly opening, hollow body, said body having a semi-circular wall; a removable lid closing the open end of the body, said lid having a pouring spout; a cap hinged to the lid and swingable into and out of a normal position closing the spout; and baffle means within said body arranged to prevent solid particles from passing out of the spout, said means comprising an inverted tumbler having a circular wall of the same diameter as that of said semi-circular body wall and having the wall frictionally engaged by the semi-circular wall of the body intermediate opposite ends of the body.

2. A container comprising an upwardly opening, hollow body; a removable lid closing the open end of the body, said lid having a pouring spout; a cap hinged to the lid and swingable into and out of a normal position closing the spout; and baffle means within said body arranged to prevent solid particles from passing out of the spout, comprising an inverted tumbler frictionally engaged by the wall of the body intermediate opposite ends of the body, said tumbler being of circular cross section, the body having a front wall transversely curved through approximately 180 degrees on a radius substantially equal to that of the opening and of the tumbler, thus to be disposed in contact with the tumbler through substantially half of the tumbler's circumference.

References Cited in the file of this patent

UNITED STATES PATENTS

2,037,172	Leffert	Apr. 14, 1936
2,695,732	Tupper	Nov. 30, 1954
2,764,199	Tupper	Sept. 25, 1956

FOREIGN PATENTS

1,052,589	France	Jan. 26, 1954