(12) PATENT
(19) AUSTRALIAN PATENT OFFICE

(11) Application No. AU 200013375 B2
(10) Patent No. 762199

(54) Title
Composite hook and loop fasteners, methods of their manufacture, and products containing them

(51)[6] International Patent Classification(s)
A44B 013/00

(21) Application No: 200013375

(22) Application Date: 1999.11.05

(87) WIPO No: WO00/27235

(30) Priority Data

(31) Number	(32) Date	(33) Country
09/187936	1998.11.06	US

(43) Publication Date : 2000.05.29
(43) Publication Journal Date : 2000.07.27
(44) Accepted Journal Date : 2003.06.19

(71) Applicant(s)
Velcro Industries B.V.

(72) Inventor(s)
William H. Shepard; William P. Clune

(74) Agent/Attorney
DAVIES COLLISON CAVE,1 Little Collins Street,MELBOURNE VIC 3000

(56) Related Art
US 4465486
US 5614057

13375/00

PCT WORLD INTELLECTUAL PROPERTY ORGANIZATION
International Bureau

INTERNATIONAL APPLICATION PUBLISHED UNDER THE PATENT COOPERATION TREATY (PCT)

(51) International Patent Classification 6 :		(11) International Publication Number:	WO 00/27235
A44B 13/00	A1	(43) International Publication Date:	18 May 2000 (18.05.00)

(21) International Application Number: PCT/US99/25748

(22) International Filing Date: 5 November 1999 (05.11.99)

(30) Priority Data:
09/187,936 6 November 1998 (06.11.98) US

(63) Related by Continuation (CON) or Continuation-in-Part (CIP) to Earlier Application
US 09/187,936 (CON)
Filed on 6 November 1998 (06.11.98)

(71) Applicant *(for all designated States except US)*: VELCRO INDUSTRIES B.V. [NL/NL]; Castorweg 22–24, Curacao (AN).

(72) Inventors; and
(75) Inventors/Applicants *(for US only)*: SHEPARD, William, H. [US/US]; 7 Highland Drive, Amherst, NH 03031 (US). CLUNE, William, P. [US/US]; 15 Currier Road, Concord, NH 03301 (US).

(74) Agents: WILLIAMS, John, N. et al.; Fish & Richardson P.C., 225 Franklin Street, Boston, MA 02110–2804 (US).

(81) Designated States: AE, AL, AM, AT, AU, AZ, BA, BB, BG, BR, BY, CA, CH, CN, CR, CU, CZ, DE, DK, DM, EE, ES, FI, GB, GD, GE, GH, GM, HR, HU, ID, IL, IN, IS, JP, KE, KG, KP, KR, KZ, LC, LK, LR, LS, LT, LU, LV, MA, MD, MG, MK, MN, MW, MX, NO, NZ, PL, PT, RO, RU, SD, SE, SG, SI, SK, SL, TJ, TM, TR, TT, TZ, UA, UG, US, UZ, VN, YU, ZA, ZW, ARIPO patent (GH, GM, KE, LS, MW, SD, SL, SZ, TZ, UG, ZW), Eurasian patent (AM, AZ, BY, KG, KZ, MD, RU, TJ, TM), European patent (AT, BE, CH, CY, DE, DK, ES, FI, FR, GB, GR, IE, IT, LU, MC, NL, PT, SE), OAPI patent (BF, BJ, CF, CG, CI, CM, GA, GN, GW, ML, MR, NE, SN, TD, TG).

Published
With international search report.
Before the expiration of the time limit for amending the claims and to be republished in the event of the receipt of amendments.

(54) Title: COMPOSITE HOOK AND LOOP FASTENERS, METHODS OF THEIR MANUFACTURE, AND PRODUCTS CONTAINING THEM

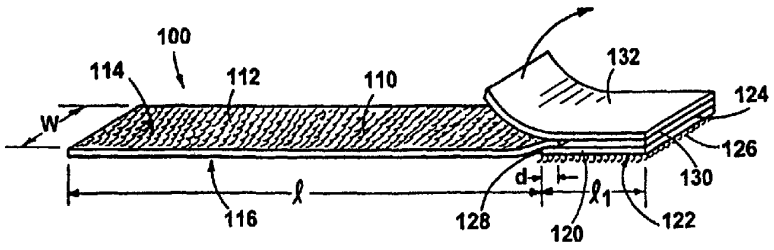

(57) Abstract

A composite hook and loop fastener (100) in the form of an elongated strip has an elongated loop component (110), a hook component (120) permanently affixed to the loop component (110), and a backing layer (130) disposed on a face of the wrap tie in a discrete region. The backing layer (130) is used for permanent attachment of the wrap tie to a supporting surface. One end of the loop component (110) is available for encircling an object to be wrapped and engaging the fastener elements of the hook component (120). The loop component (110) has a self–supporting web of entangled fibers, the fibers forming both a sheet–form body and hook–engageable, free–standing loops extending from at least one surface of the body, and the hook component (120) has fastener elements extending from a common base. The backing layer (130) may be a pressure sensitive adhesive or a synthetic resin.

COMPOSITE HOOK AND LOOP FASTENERS, METHODS OF THEIR MANUFACTURE, AND PRODUCTS CONTAINING THEM

Background of the Invention

This invention relates to composite hook and loop fasteners, methods of their manufacture and products containing them.

A typical composite hook and loop fastener is produced by taking preformed hook and loop material and overlapping and attaching the two materials together along their edge margins or by totally overlapping one on top of the other. The attaching is usually done by ultrasonic welding, thermal fusing or an adhesive bond. This step of attaching preformed hook and loop material to form the composite fastener adds additional cost to the manufacturing process. Hook and loop materials may also be laminated in-situ during the formation of the hook component.

One particular application for an improved composite fastener, discussed in more detail below, is as a wrap tie for closing bags. An economical bag tie commonly used in retail stores comprises a wire covered with paper. The wire tie is wrapped around an open end of a bag and the ends of the wire are twisted together to close the bag. Another common type of a bag tie is a clip tie that consists of a piece of plastic with an opening. A gathered open end of the bag is pushed through the side of the opening to close the bag. Other closures include strings and tapes and closing arrangements that employ adhesives or removably engageable elements.

The wire ties and clip ties are often used in retail stores where items such as bakery products, fresh produce, dry goods, nails, etc. are placed in a bag and sold by weight or number. The consumer usually stores

these products in the bags. The ties may be opened and closed several times before the bag is emptied. There is a need for low-cost dependable repeated-use closures for this and many other applications.

Summary of the Invention

A composite hook and loop fastener in the form of an elongated strip includes a loop component, a hook component permanently affixed to the loop component, and a backing layer disposed on a face of the wrap tie in a discrete region. The backing layer is used for permanent attachment of the wrap tie to a supporting surface. One end of the loop component is available for encircling an object to be wrapped and engaging the fastener elements of the hook component. The loop component has a self-supporting web of entangled fibers, the fibers forming both a sheet-form body and hook-engageable, free-standing loops extending from at least one surface of the body, and the hook component has fastener elements extending from a common base.

In general, in one aspect, the invention provides a wrap tie in the form of an elongated strip. The wrap tie has an elongated loop component having a web of fibers forming both a sheet-form body and hook-engageable loops extending from at least one surface of the body, a hook component permanently affixed to a first end of the loop component, the hook component comprising a base of synthetic resin and an array of loop-engageable fastener elements integrally molded with and extending from a first surface of the base, and a backing layer permanently affixed to a second surface of the base opposite the fastener elements, for permanent attachment of the wrap tie to a supporting surface. A second end of the loop component is available for encircling an object to be wrapped and engaging the fastener elements of the hook component.

Implementations of this aspect of the invention may include one or more of the following features. The web of the loop component may be non-woven and specifically a needled non-woven. The non-woven needled web may weight less than about 2 ounces per square yard (68 grams per square meter). The non-woven web may be in a stretched, stabilized state. The loops of the loop component may extend from loop structures, and at least some of the loop structures may each have a common, elongated trunk portion extending from the web from an associated knot and multiple loops extending from the trunk portion. The loop component may have an edge margin encapsulated in resin of the hook component, and a remainder free of hook component resin. The edge margin may be about 10% of the area of the loop component. The loop component may have an entire face encapsulated in resin of the hook component. The loop component may have two broad, opposite sides, and loops may extend from both sides. The hook component may be shorter than the loop component, as measured along the wrap tie, and the backing layer may overlap longitudinally the hook component and may be disposed on a side of the wrap tie opposite the fastener elements. The fastener elements of the hook component may be hook- or mushroom-shaped. The hook component may be disposed at one end of the elongated wrap tie, and the hook-shaped fastener elements may extend toward the other end of the wrap tie. The base of the hook component may include an integral extension void of fastener elements, for overlapping the loop component and for face-to-face attachment. The backing layer may be a pressure sensitive adhesive or a synthetic resin. A removable release liner may cover the pressure sensitive adhesive layer. The release liner may overlap longitudinally the loop component such that a portion of the release liner is exposed for grasping.

According to another aspect of the invention, a wrap tie has an elongated hook component having a base of synthetic resin and an array of fastener elements extending from a first surface of the base, a loop component permanently affixed to a first end of the hook component, the loop component having a web of fibres forming both a sheet-form body and hook-engageable loops extending from at least a first surface of the body, and a backing layer permanently affixed to a second surface of the body of loop component for permanent attachment of the wrap tie to a supporting surface. A second end of the hook component is available for encircling an object to be wrapped and engaging the hook-engageable loops of the loop component. The hook component may be in a stretched state.

According to another aspect of the invention, a bag has an open end and an elongated, strip-form wrap tie according to this invention, permanently affixed to an outer surface of the bag for closing the open end. The wrap tie is permanently bonded to the outer surface of the bag in a discrete region along the length of the wrap tie. One end of the loop component is available for encircling the open end of the bag to secure the bag in a closed state. The wrap tie may be permanently affixed to the bag by a pressure sensitive adhesive layer or a synthetic resin. The bag may be made of synthetic resin or paper.

According to another aspect of the invention a sheet-form composite touch fastener includes a loop component having a self-supporting non-woven web of entangled fibres, the fibres forming both a sheet-form web body and hook-engageable free-standing loops

extending from at least one surface of the web body, and a hook component having a base of synthetic resin to which stems of loop-engageable hooks are integrally molded. The resin of the hook component extends at least partially underneath the loop component and encapsulates fibres of the web body of the loop component.

Implementations of this aspect of the invention may include one or more of the following features. The loop component may have an edge margin encapsulated in resin of the hook component, and a remainder free of hook component resin. The edge margin may be about 10% of the area of the loop component. The loop component may have an entire face encapsulated in resin of the hook component. The loops of the loop component may extend from a common side of the sheet-form touch fastener. The loops of the loop component may be arranged on a side of the sheet-form composite touch fastener opposite to the hooks of the hook component. The fibres of the loop component may be encapsulated in the resin of the hook component and the loop component may comprise regions which are more encapsulated by resin than other regions.

According to another aspect of the invention there is provided a method of manufacturing elongated, strip-form fastener products, each fastener product having both an array of fastener elements extending therefrom and loops engageable by the fastener elements, the method comprising the steps of:

providing a longitudinally continuous sheet of a loop material of finite width, the loop material having loops extending from at least a first surface thereof;

permanently bonding a longitudinally continuous strip of plastic hook material to the loop material to

form a laminate, with the hook material at least partially overlapping the loop material widthwise and having a width significantly less than the width of the loop material, the hook material having a strip-form base with stems of fastener elements integrally molded with and extending therefrom;

applying pressure sensitive adhesive to a predetermined region of a side of the laminate opposite the fastener elements; and

cutting the laminate to form fastener products, each comprising a portion of said loop material, a portion of said hook material, and a layer of said adhesive.

In yet another aspect, there is provided a sheet-form composite touch fastener comprising:

a sheet-form loop component comprising a web of fibres forming both a sheet-form web body and hook-engageable loops extending from at least one surface of the web body;

a sheet-form hook component comprising a base of synthetic resin to which stems of loop-engageable hooks are integrally molded, one edge region of the hook component being permanently attached to a first edge of the loop component; and

wherein fibres of the first edge of the loop component are encapsulated by resin of said edge region of the hook component, the loop component having a second edge, opposite said first edge, substantially free of resin of the hook material.

Among the advantages of the invention may be one or more of the following. The wrap-tie of this invention does not have any sharp or metal parts, which may cut the bag when they become exposed, pose injury risk for the

consumer or oxidize and thus contaminate the bag and its contents. There is no preferred direction or need to twist the wrap tie, thus making it easy to open and close the bag opening. Further the wrap tie of this invention can be pre-attached to a bag automatically or can be dispensed from a wrap tie dispenser for manual attachment to a bag. The very low thickness and stiffness of both the non-woven loop material and the hook material, along with its low cost and good closure performance, make the wrap tie a particularly useful component of many products.

The next page is page 10.

Other features and advantages of the invention will be apparent from the following description of embodiments, and from the claims.

Brief Description of the Drawing

FIG. 1 is a perspective view of a wrap tie having an elongated loop component overlapping an end of a short hook component and adapted for permanent union with a bag or similar article.

FIG. 1A is a perspective view of a bag having the wrap tie of FIG. 1 attached to its surface.

FIG. 1B is a side view of a wrap-tie having loops on both sides of an elongated loop component.

FIG. 1C is a side view similar to FIG. 1B, of a wrap-tie having an elongated loop component, an end portion of which overlaps the entire back surface of a hook component.

FIG. 1D is a side view of a wrap-tie in which a hook component is attached in the middle of an elongated loop component.

FIG. 1E is a side view of a wrap-tie in which an elongated stretched hook component overlaps an end of a short loop component.

FIG. 1F is a side view of a wrap-tie in which the hook strip is attached face-to-face to the loop strip.

FIG. 2A is a photograph of a preferred non-woven loop material for use as a loop component, enlarged 50X.

FIG. 2B is a schematic view of the face of the non-woven loop material shown in FIG. 2A.

FIG. 2C is a sketch of the non-woven loop material illustrating clusters of loop fibers extending from a fibrous mat.

FIG. 3 is a side view of a twisted wrap tie according to the invention.

FIGS. 4A and 4B are perspective magnified views of portions of a hook fastener and a stretched hook fastener, respectively.

FIG. 5 illustrates an apparatus for forming and uniting components of a wrap tie.

FIGS. 6A is a perspective view of a portion of the apparatus of FIG. 5 for forming the preform product of FIG. 7, while FIG. 6B is a view taken in plane 6B-6B of FIG. 6A.

FIG. 7 illustrates a web comprised of attached loop and hook bands formed with the apparatus of FIGS. 5, 6A and 6B.

FIG. 8 is a perspective view of four hook and loop segments formed by slitting the web shown in FIG. 7.

FIG. 9 is a top view of a hook and loop segment that has been perforated cut.

FIG. 10 is an enlarged side view of the hook and loop segment, taken along line 10-10 in FIG. 9.

FIG. 11 is a cross sectional view of the interface between the hook and loop segments, taken along line 11-11 in FIG. 10.

FIG. 12 is an enlarged side view of area 12 in FIG. 10.

FIG. 13 illustrates reciprocating ultrasonic welding of bands of hook and loop material to form a wrap tie preform.

FIG. 13A illustrates rotary ultrasonic welding of bands of hook and loop material to form a wrap tie preform.

FIG. 14 illustrates thermal fusing of bands of hook material and loop material to form a wrap tie preform.

FIG. 15 is a schematic illustration of an apparatus that dispenses wrap ties from a carrier sheet.

FIG. 15A is a schematic illustration of area A in FIG. 15.

FIG. 15B is a schematic illustration of an automatic label dispensing apparatus.

FIG. 16A is a side view of stacked wrap ties.

FIG. 16B is a schematic illustration of a box dispenser for the stacked wrap ties of FIG. 16A.

FIG. 17 is a schematic illustration of an application of a wrap tie as a support of a pipe against a wall.

Description of Embodiments

Referring to FIG. 1, a wrap tie 100 features an elongated strip of non-woven loop material 110, attached to a short strip of hook material 120.

The strip of non-woven loop material has a first surface 114 with hook-engageable loops 112 and a second relatively smooth surface 116. The strip of hook material 120 has a first surface 122 with integrally molded fastener elements 126 and a second smooth surface 124. The fastener elements may be hook- or mushroom shaped. The hook-shaped fastener elements extend toward the loop material. The smooth surfaces of the hook and loop strips overlap distance d and are attached at joint 128 so that the loops and hooks extend in opposite directions of the wrap tie. A pressure sensitive adhesive layer 130 covers the remainder of the smooth surface 124 of the hook strip 120. For a face-to-face attachment of the hook and loop strips (FIG. 1F), i.e., attaching the surface of the loop strip having the loops to the surface of the hook strip having the hooks, the base portion of the hook strip 120 has an integral extension 129 without hooks for overlapping the loops of the loop strip 110. The pressure sensitive adhesive layer 130 is covered with a release liner 132, such as silicon coated paper. The release liner 132 overlaps

longitudinally the loop component such that a portion of the release liner is exposed for grasping. In one example, the tie is 0.5 inch wide, dimension w, the loop strip is 3 inch long, dimension l, the hook strip is 0.75 inch long, dimension l_1, and the overlap area 128 is 0.4 inch long, dimension d, all components having the same width w. The thickness of the loop material may vary between about 0.150 inch and 0.0100 inch, and the thickness of the hook material may vary between about 0.100 inch and 0.010 inch.

Referring to FIG. 1A, the wrap tie of FIG. 1 is attached to an open end of a bag by the adhesive layer. The elongated non-woven loop strip is wrapped around the bag opening and the free end of the loop strip is secured to the hook strip by engaging the loops with the hooks. The wrap tie may be prefastened and integrated with the bag, e.g., during manufacture of the bag, or it may be applied to the bag at the time of its use, by removing the release layer and pressing the adhesive component against the material of the bag. The bag may be made of synthetic resin or paper. In some instances the wrap tie may have, instead of the pressure sensitive adhesive layer, a synthetic resin layer which can be thermally fused to the bag surface.

In such applications in which the products are considered disposable after single use, the loop material only need withstand a relatively small number of hooking cycles (e.g., 3 to 5) over the product's useful life. We refer to these as "low cycle" applications. Loop products in this category may be fabricated to advantage with needled fabric that has needle-formed loops on one or both sides. In certain cases, the material is in a permanently stretched and stabilized state, having been stretched to increase its area in excess of 100%, as much as 150% or more from its as-needled condition. A

preferred needled and stretched material is formed of staple polyester yarns of between about 18 and 4 denier, preferably 6 denier.

Other applications, such as strapping or bundling, may require the hook-engageable loops to withstand a higher number of cycles and higher stress. These relatively "high cycle", high strength applications generally are preferably achieved by using woven or knitted material or by forming loops with higher denier (or higher tenacity) fibers than those suitable for lower performance conditions. Loop products in this category may be prepared by stretching an appropriate needled loop fabric in the range of 50 percent to 100 percent stretch, for example, followed by stabilization.

For certain applications, specially treated loop material may be used in a wrap tie. For example, on a bag that holds an electronic device and needs to dissipate static electricity, non-woven loop impregnated with carbon or stainless steel may be used. Carbon or stainless steel fibers may also be blended with staple fiber to form a static electricity dissipative non-woven loop material. A two-sided non-woven loop material may be used on a wrap tie that, no matter if twisted, can be fastened to the hook.

Additional configurations of a wrap tie include among others the following: the loop strip 110 has loops on both surfaces 114 and 116 (FIG. 1B), the loop strip 110 overlaps and attaches to the entire smooth surface 124 of the hook strip 120, with the adhesive layer 130 being intimately bonded to the loop side 114 of the strip(FIG. 1C), the hook strip 120 attaches to the middle of the loop strip 110 (FIG. 1D), and an elongated hook strip 120, which may be of formed and stretched material, is attached to a short loop strip 110(FIG. 1E).

In preferred embodiments, the non-woven loop material 110 (FIG. 1) is very thin, but still self-supporting, and has relatively free fibers forming loops extending from one side or both sides of a continuous, tangled mat of fibers. In preferred embodiments the non-woven loop material 110 comprises a needled fabric of staple fibers which has been stretched longitudinally and transversely, to form a fabric of the form depicted in FIGS. 2A and 2B.

In such a fabric the individual fibers of the mat follow no definite pattern as in a woven product, but extend in various directions within the plane of the fabric mat. The loops that extend from the loop product are of the same fibers that comprise the mat but extend beyond the general mass of the mat, out of the plane of the mat, generally from associated knots 180, in the form of well anchored loop trees 250 (FIG. 2C).

As shown photographically in Fig. 2A, and in the diagram of FIG. 2B, in relatively low density fiber regions of a preferred mat a substantial number of the fibers of the mat of loop material 110 are taut (i.e., not slack, regionally straight), and extend between knots 180 of the loop material fabric. The taut fibers 182 have been straightened by tension applied in at least one direction in the plane of the fabric mat 170, while the knots have been produced by slippage and agglomeration caused during the application of stretching forces to the needled non-woven fabric.

The knot density of the sample shown in the photograph was determined to be approximately 180 knots per square inch by counting the number of visible knots within a given square area. The knots themselves are fairly tight, made up of several monofilament fibers, and are interconnected by the taut fibers seen running between them. Between knots, the thin fiber mat is not

very dense and is sheer enough to permit images to be readily seen through it. For low cost applications, the fabric preferably weighs less than about 2 ounces per square yard (68 grams per square meter).

In this particular embodiment, the fibers of the mat are held in their taut, straightened condition by a water-based, acrylic binder (not visible in the photograph) applied to the side of the mat opposite the loops to bind the mat fibers in their straight condition to stabilize the areal dimensions of the fabric, and to secure the loops at their associated knots. The binder generally ranges between 20 and 40% of the total weight of the fabric and in the presently preferred embodiments accounts for about one third of the total weight of the loop component. The resulting fabric is dimensionally stable and strong enough to be suitable for further processing by standard fabric-handling techniques. While the fabric has a slight stiffness, like a starched felt, the stiffness can be mitigated where desired by softeners or mechanical working.

As seen in FIG. 2C, loops 112 extend from free-standing clusters of loop fibers extending from the fibrous mat 170. The clusters 250 which have several mono-filament loops 112 extending from a common elongated, substantially vertical trunk 252 we call "loop trees". Each loop tree 250 extends from a corresponding knot 180 in which the loops of the cluster are anchored. Interstices between individual filaments in the trunk portion 252 of each tree or at the base of each bush, and in each knot 180 provide paths for the wicking of liquid binder, under the influence of surface tension of the liquid binder, to provide additional localized stiffness and strength. Importantly, the density of clusters in the plan view is very low, leaving sufficient room between the "branches" of neighboring trees to

accommodate hooks and deflected loop material during engagement.

A more complete description of suitable non-woven loop materials may be found in U.S. Patent application 08/922,292, and a related PCT patent application entitled "Loop material, its manufacture and its use in products", filed on September 3, 1998, as a continuation in part of the foregoing application, the entire disclosures of which are hereby incorporated by reference.

Referring to Fig. 3, the flexibility of the non-woven material 110 allows it to be twisted several times and fastened on the hook fastener strip 120. Even if there are loops on only one face of the strip, hook engageable loops occur at all quadrants of the twist, to ensure engagement with the hook component. Further the loops around the slit edges of the loop strip are oriented in line with the fibrous mat 170, making the edges hook engageable.

A hook strip 120 compatible with the loop material is used. For a non-woven loop material made from staple polyester fibers having a denier of 6, a hook may be of the CFM-29 designation, available from Velcro USA Inc. of Manchester, New Hampshire, U.S.A.. The CFM-29 hook strip has hooks of only 0.015 inch (0.38 mm) height. Especially when the hook component is the elongated component as depicted in FIG. 1E, the hook strip may be a stretched hook product. Referring to FIGS. 4A and 4B, when a hook product is subjected to lateral stretching, the material of the base web 150 decreases in thickness, from the original thickness t_0 of Fig. 4A to the reduced thickness t_1 of Fig. 4B. The areal density of the fastener elements is accordingly reduced. For example, with hook form elements of a type having a conventional height of about 0.035 inch and a spacing l_o of about 0.050 inch along the rows, starting with a spacing w_o of the

rows of about 0.025 inch and ending with a spacing w_1 of Fig. 4B of about 0.100 inch, the areal density changes by a factor of 4, from about 800 fastener elements 11 per square inch to about 200 fastener elements per square inch. Starting with higher hook densities, higher final densities can be achieved to match the hooking needs of particular applications, while still of low cost.

The product of Fig. 1 may be economically formed by the process and apparatus illustrated in Fig. 5. Extruder barrel 308 melts and forces the molten plastic 310 through a slot-form die 312. The extruded plastic enters the nip 314 between base roll 316 and mold roll 318 containing mold cavities shaped to form the hooks of a strip-form hook fastener component of the well known hook and loop type. The strip fastener material formed in nip 314 travels about the periphery of mold roll 318 to stripping roll 320, which assists in pulling the finished product 300 from the mold roll, and from there to a windup device, not shown.

For more detail about the general operation of the apparatus of Fig. 5, the reader is referred to U.S. Patent 5,260,015 to Kennedy, et al., which discloses laminates made with loop materials.

There are many possible methods of feeding the non-woven sheet material to the forming section of the hook forming device. In one example, shown in Figs. 6A and 6B, several transversely spaced apart bands of non-woven material 350 are introduced about the periphery of the base roll 316 and enter nip 314 at the same time molten plastic 310 enters the nip at regions between the bands of loop material. The slot-form die has alternating plugs and open die spaces, the spaces arranged to provide molten resin that fills the spaces 352 between the bands of the non-woven loop material and produce limited overlap of the resin and the bands of

non-woven (FIG. 6B), for forming joints 128. The edge margins of the bands of non-woven material bond intimately with the edge margins of the molten resin with which bands of hook fasteners 354 are integrally formed. The bond is formed by encapsulating fibers of the loop material with the molten resin of the hook material. Thereby a composite structure of joined alternating bands of loop component and hook component are formed.

In one example, a web includes (FIG. 7), starting from the left, a 3 inch wide strip of non-woven loop, an inch and a half wide strip of hook material, a 6 inch wide strip of non-woven loop, an inch and a half wide strip of hook material and a 3 inch wide strip of non-woven loop. The alternating strips of non-woven and hook material overlap partially, being bonded at joints 128. The overlap areas are for instance 0.4 inch wide. After formation, the web passes through a slitter where it is longitudinally slit at the mid-points A and C of the hook segments, and at the midpoint B of the 6 inch loop segment. This results in four continuous length composite webs, each comprising a narrow band of hook material joined to a relatively wide band of non-woven loop material (FIG. 8).

In the next step each of the four webs passes through a coating line where a pressure-sensitive adhesive is applied to the back of the hook strip material, this followed by a step where a release liner is placed on the adhesive layer.

At that point each of the four continuous webs is perforated-cut (kiss-cut) along lines 400 through the loop and hook side but not through the release liner 132, as shown in FIGS. 9, 10, and 12, to form a series of elongated bag ties. The direction of the kiss-cut 400 is perpendicular to the longitudinal axis 402 of the composite web, which coincides with the machine

direction. A cross section of the web along the indicated direction 11-11 is shown in FIG. 11.

An alternative way to manufacture the wrap tie is to ultrasonically seal respective preformed bands of hook and loop material. The two materials are slit to the appropriate width and their edges overlapped and ultrasonically welded with a reciprocating ultrasonic welder, as shown in FIG. 13, or a rotary ultrasonic welder, as shown in FIG. 13A. The back of the hook material is coated with pressure-sensitive adhesive prior to welding.

Another way to manufacture the wrap tie is to thermally fuse overlapping edge margins of preformed bands of hook and loop materials. Thermal fusing is performed with two rotary wheels 160 and 162, shown in FIG. 14. Both rotary wheels are heated, and may have a knurl pattern on them. The wheels come in contact and nip the area to be joined, which in this case is the overlap area between the edges of the loop and hook bands. The heated wheels melt the hook resin and fuse it into and around the fibers of the non-woven loop, thereby forming a bond between the margin portions of the two bands. The mechanical surrounding of the fiber with the melted, then solidified resin provides the necessary bond strength.

Different type of resins may be used to form either the hook or the non-woven material. In certain preferred cases, as mentioned, the non-woven material is made from polyester fibers and the hook material from polyethylene. The hook and loop material preferably differ in their heat properties. For example, the polyethylene melts at a lower temperature than the polyester and thereby allows the thermal fusing of the hook resin around the polyester fiber of the loop

material, to form a strong mechanical bond with dimensional stability.

The adhesive for layer 130 is preferably a pressure sensitive type adhesive. In some instances, layer 130 may be a synthetic resin suitable for thermal fusion onto a substrate.

Wrap ties carried by a common release liner 202 may be rolled into a roll 210. The wrap ties 206 have one end 208 attached to the release liner with the pressure sensitive adhesive and a free end 209. The roll 210 may be fed to a standard labeler 200, shown diagrammatically in FIG.15. The release liner is arranged to pass under a sharp angle 212 around a peel plate 204, where it reverses direction. The release liner is flexible and can change easily direction. However, the wrap tie has a certain amount of stiffness that causes the edge of the wrap tie 207 not to follow the release liner 202 around the peel plate 204, and to protrude at the point where the release liner reverses its direction (FIG. 15A). In this way the peel plate automatically separates the wrap tie from the release liner. The wrap tie may either be indexed or dynamically placed upon a moving bag on a bagging machine which produces polyethylene bags. Automatic label dispensing on a moving bag is shown in FIG. 15B. The leading edge 217 of the moving bag 218 trips an electric eye 216. The electric eye may be a light emitting diode. The electric eye 216 sends a signal to the label dispenser 200 and the dispenser accelerates and transports the wrap tie 206 towards the moving bag 218. When the wrap tie 206 reaches a predetermined location 219 on the bag 218 and while the wrap tie is still connected to the release liner 202 a tamp roller 214 presses edge 207 of the wrap tie 206 onto the bag 218. The wrap tie 206, the bag 218, and the release liner 202 continue to move at the same

speed, while the tamp roller 214 presses the wrap tie onto the bag. Once the wrap tie is fully released from the release liner and attached to the bag, the release liner stops moving while the bag continues to move away from the dispenser region. The process repeats again when the next bag moves close to the dispenser area and trips the electric eye 216. The advancement of the wrap ties may be controlled by a separate sensor (not shown) for increased accuracy.

When the backing layer 130 is made of synthetic resin, the tamp roller 214 is heated to thermally fuse the wrap tie onto the bag.

In another embodiment, the wrap ties 206 may be stacked one on top of the other (FIG. 16A), having one end 226 of each tie releasably adhered together and a free end 224. The stacked wrap ties may be placed in a dispenser box 220 (FIG. 16B). The dispenser box has an opening 222, allowing the free ends 224 of the wrap ties to be successively pulled out of the box.

Other features and advantages of this invention may include one or more of the following. The web in FIG. 7 may be first coated with the pressure sensitive adhesive and then pass through the slitter where it is longitudinally slit to form the hook and loop segments. The very low thickness of both the non-woven loop material and the hook material, along with its low cost and good closure performance, make the wrap tie a particularly useful component of many products. The wrap ties may be employed, for instance, to close a plastic bag as described above (FIG. 1A), to secure pipes or other building materials (FIG. 18), to bundle cables and secure bundled cables, etc.

Other features and advantages of the invention will be realized, and are within the scope of the following claims.

What is claimed is:

1. A wrap tie in the form of an elongated strip, the wrap tie comprising:

an elongated loop component having a web of fibers forming both a sheet-form body and hook-engageable, loops extending from at least one surface of the body;

a hook component permanently affixed to a first end of the loop component, the hook component comprising

a base of synthetic resin; and

an array of loop-engageable fastener elements integrally molded with and extending from a first surface of the base; and

a backing layer permanently affixed to a second surface of the base opposite the fastener elements, for permanent attachment of the wrap tie to a supporting surface with a second end of the loop component available for encircling an object to be wrapped and engaging the fastener elements of the hook component.

2. The wrap tie of claim 1 wherein said loop component comprises a non-woven web.

3. The wrap tie of claim 2 wherein said non-woven web comprises a needled non-woven web.

4. The wrap tie of claim 3 in which the weight of the non-woven web is less than about 2 ounces per square yard (68 grams per square meter).

5. The wrap tie of claim 3 in which the non-woven web is in a stretched, stabilized state.

6. The wrap tie of claim 1 wherein the loops of the loop component extend from loop structures, at least some of the loop structures each comprising

a common, elongated trunk portion extending from the web from an associated knot and

multiple loops extending from the trunk portion.

7. The wrap tie of claim 1 wherein the loop component consists of an edge margin encapsulated in resin of the hook component, and a remainder free of hook component resin.

8. The wrap tie of claim 7 wherein the edge margin comprises less than about 10% of the area of the loop component.

9. The wrap tie of claim 1 wherein the loop component is encapsulated in resin of the hook component across substantially an entire face thereof.

10. The wrap tie of claim 1 wherein said backing layer comprises a pressure sensitive adhesive.

11. The wrap tie of claim 10 further comprising a removable release liner covering the pressure sensitive adhesive backing layer.

12. The wrap tie of claim 11 in which the release liner longitudinally overlaps the loop component such that a portion of the release liner is exposed for grasping.

13. The wrap tie of claim 1 wherein said backing layer comprises a synthetic resin.

14. The wrap tie of claim 1 wherein the loop component has two broad, opposite sides, both sides having exposed loops extending therefrom.

15. The wrap tie of claim 1 in which the hook component is shorter than the loop component, as measured along the wrap tie, the backing layer longitudinally overlapping the hook component and disposed on a side of the wrap tie opposite the fastener elements.

16. The wrap tie of claim 1 in which the fastener elements of the hook component are hook-shaped.

17. The wrap tie of claim 16 in which the hook component is disposed at one end of the elongated strip, the hook-shaped fastener elements extending toward the other end of the strip.

18. The wrap tie of claim 1 in which the fastener elements of the hook component are mushroom-shaped.

19. The wrap tie of claim 1 in which the base of the hook component includes an integral extension void of fastener elements and overlapping the loop component in face-to-face attachment thereto.

20. A wrap tie in the form of an elongated strip, the wrap tie comprising:

an elongated hook component comprising a base of synthetic resin and an array of fastener elements extending from a first surface of the base;

a loop component permanently affixed to a first end of the hook component, the loop component comprising a web of fibers forming both a sheet-form body and hook-engageable loops extending from at least a first surface of the body; and

a backing layer permanently affixed to a second surface of the body of loop component for permanent attachment of the wrap tie to a supporting surface, with

a second end of the hook component available for encircling an object to be wrapped and engaging the hook-engageable loops of the loop component.

21. The wrap tie of claim 20 in which the elongated hook component is in a stretched state.

22. In combination,

the wrap tie of claim 1 or 20; and

a bag having an open end, the backing layer of the wrap tie permanently adhered to an outer surface of the bag near its open end, the wrap tie positioned to enable the wrap tie to be subsequently wrapped about the bag to engage the loops of the loop component with the fastener elements of the hook component to close the bag.

23. A bag having an open end and an elongated, strip-form wrap tie permanently affixed to an outer surface thereof for closing said open end, said wrap tie comprising

an elongated loop component having hook-engageable loops extending from at least a first surface of the wrap tie; and

a hook component bonded to the loop component, the hook component having fastener elements extending from a common base;

the wrap tie permanently bonded to the outer surface of the bag in a discrete region along the length of the wrap tie, one end of the loop component being available for encircling the open end of the bag to secure the bag in a closed state.

24. The bag of claim 23 wherein the wrap tie is permanently affixed to an outer surface of the bag by a pressure sensitive adhesive.

25. The bag of claim 23 wherein the wrap tie is permanently affixed to an outer surface of the bag by a synthetic resin.

26. The bag of claim 23 wherein said bag comprises a synthetic resin.

27. The bag of claim 23 wherein said bag comprises paper.

28. A sheet-form composite touch fastener comprising:

a loop component comprising a self-supporting non-woven web of entangled fibres, the fibres forming both a sheet-form web body and hook-engageable free-standing loops extending from at least one surface of the web body;

a hook component comprising a base of synthetic resin to which stems of loop-engageable hooks are integrally molded; and

wherein resin of said base of the hook component extends at least partially underneath the loop component and encapsulates fibres of said web body of the loop component.

29. The composite fastener of claim 28 in which the non-woven web comprises a needled web and has a weight of less than about 2 ounces per square yard (68 grams per square metre).

30. The composite fastener of claim 28 in which the non-woven web is in a stretched, stabilised state.

31. The composite fastener of claim 28 wherein the loop component consists of an edge margin encapsulated in resin of the hook component, and a remainder free of hook component resin.

32. The composite fastener of claim 28 wherein the edge margin comprises less than about 10% of the area of the loop component.

33. The composite fastener of claim 28 wherein the loop component is encapsulated in resin of the hook component across substantially an entire face thereof.

34. The composite fastener of claim 28 wherein said loops and fastener elements extend from a common side of the sheet-form touch fastener.

35. The composite fastener of claim 28 wherein said loops of the loop component are arranged on a side of the composite fastener opposite to the hooks of the hook component.

36. The composite fastener of claim 28 wherein the loops of the loop component extend from loop structures, at least some of the loop structures each comprising:

a common, elongated trunk portion extending from the web from an associated knot; and

multiple loops extending from the trunk portion.

37. The composite fastener of claim 28 wherein the fibers of the loop component are encapsulated in said resin of the hook component and the loop component comprises regions which are more encapsulated by resin than other regions thereof.

38. A method of manufacturing elongated, strip-form fastener products, each fastener product having both an array of fastener elements extending therefrom and loops engageable by the fastener elements, the method comprising the steps of:

providing a longitudinally continuous sheet of a loop material of finite width, the loop material having loops extending from at least a first surface thereof;

permanently bonding a longitudinally continuous strip of plastic hook material to the loop material to form a laminate, with the hook material at least partially overlapping the loop material widthwise and having a width significantly less than the width of the loop material, the hook material having a strip-form base with stems of fastener elements integrally molded with and extending therefrom;

applying pressure sensitive adhesive to a predetermined region of a side of the laminate opposite the fastener elements; and

cutting the laminate to form fastener products, each comprising a portion of said loop material, a portion of said hook material, and a layer of said adhesive.

39. The method of claim 38 in which each fastener product further comprises a removable release liner covering the layer of adhesive, the method further comprising, before the step of cutting,

applying a longitudinally continuous release liner to the laminate to cover the adhesive.

40. The method of claim 38 in which the cutting at least perforates the loop material and the base of the

hook material to define longitudinal edges of individual fastener products, and leaves the release line longitudinally continuous.

41. The method of claim 40 further comprising spooling the cut fastener products upon the continuous release line for subsequent separation.

42. The method of claim 38 in which the hook material is bonded to the loop material by ultrasonic welding.

43. The method of claim 38 in which the hook material is bonded to the loop material by thermal welding.

44. The method of claim 38 in which the hook material is bonded to the loop material by pressure sensitive adhesive.

45. The method of claim 38 in which the step of bonding comprises

continuously feeding the loop material through a nip defined between a rotating mold roll and a pressure roll, the rotating mold roll defining a multiplicity of fixed cavities about it periphery for molding the fastener elements of the hook material, while

continuously introducing molten resin to the mold roll under conditions which cause the resin to fill the cavities of the mold roll and form the hook material, such that pressure in the nip bonds the loop material to the hook material.

46. The method of claim 45 in which molten resin is

introduced to the mold roll in multiple, discrete regions along the roll, thereby forming multiple, parallel strips of hook material laminated to the loop material.

47. The method of claim 46 further comprising, after the bonding step and before the cutting step, longitudinally slitting the laminate into multiple, longitudinally continuous bands, each band including both hook material, loop material and adhesive.

48. The method of claim 45 in which the loop material is fed through the nip in the form of multiple parallel strips, the hook material forming to fill gaps between adjacent strips of hook material in the nip.

49. The method of claim 48 further comprising, after the bonding step and before the cutting step, longitudinally slitting the laminate into multiple, longitudinally contiunous bands, each band including both hook material, loop material and adhesive.

50. A sheet-form composite touch fastener comprising:

a sheet-form loop component comprising a web of fibres forming both a sheet-form web body and hook-engageable loops extending from at least one surface of the web body;

a sheet-form hook component comprising a base of synthetic resin to which stems of loop-engageable hooks are integrally molded, one edge region of the hook component being permanently attached to a first edge of the loop component; and

wherein fibres of the first edge of the loop component are encapsulated by resin of said edge region

of the hook component, the loop component having a second edge, opposite said first edge, substantially free of resin of the hook material.

51. The composite fastener of claim 54 wherein said loop component comprises a non-woven web.

52. The component fastener of claim 51 wherein said non-woven web comprises a needled web and has a weight of less than about 2 ounces per square yard (68 grams per square metre).

53. A wrap tie, substantially as hereinbefore described with reference to the drawings.

54. A bag, substantially as hereinbefore described with reference to the drawings.

55. A sheet-form composite touch fastener, substantially as hereinbefore described with reference to the drawings.

56. A method of manufacturing fastener products, substantially as hereinbefore described with reference to the drawings.

DATED this 16th day of April, 2003

Velcro Industries, B.V.

By DAVIES COLLISON CAVE
Patent Attorneys for the applicant

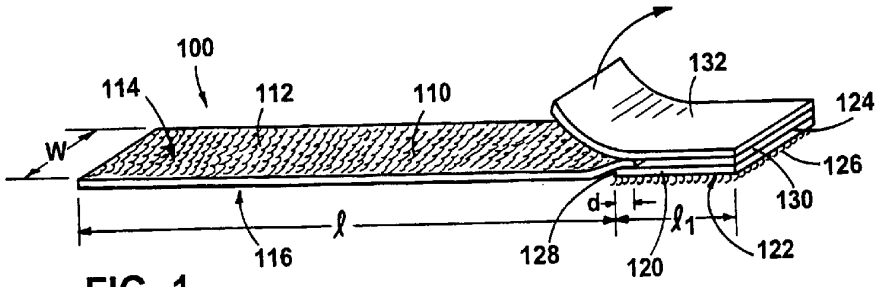

FIG. 1

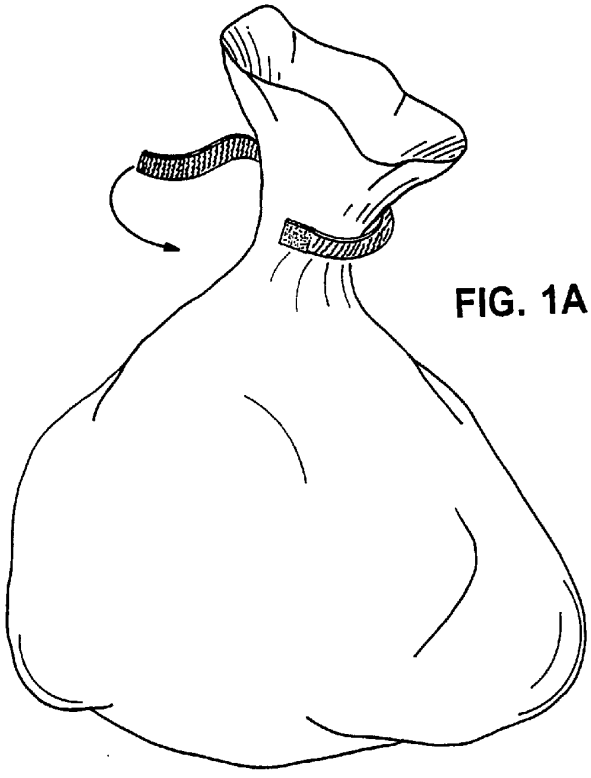

FIG. 1A

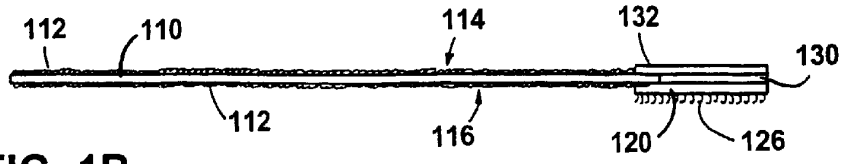

FIG. 1B

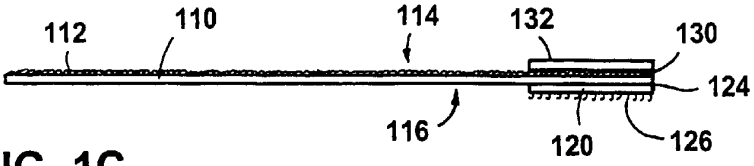

FIG. 1C

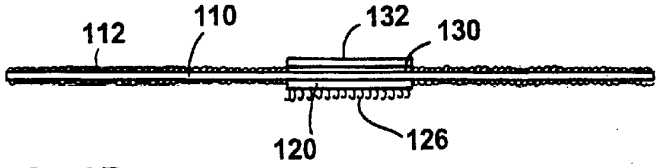

FIG. 1D

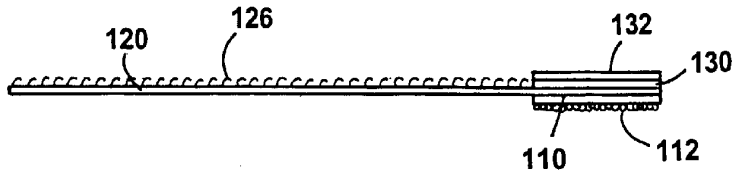

FIG. 1E

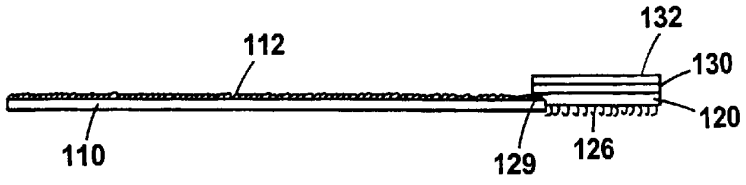

FIG. 1F

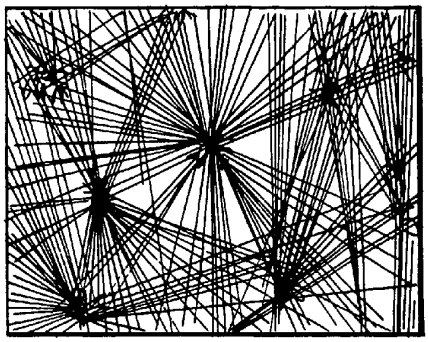

FIG. 2A

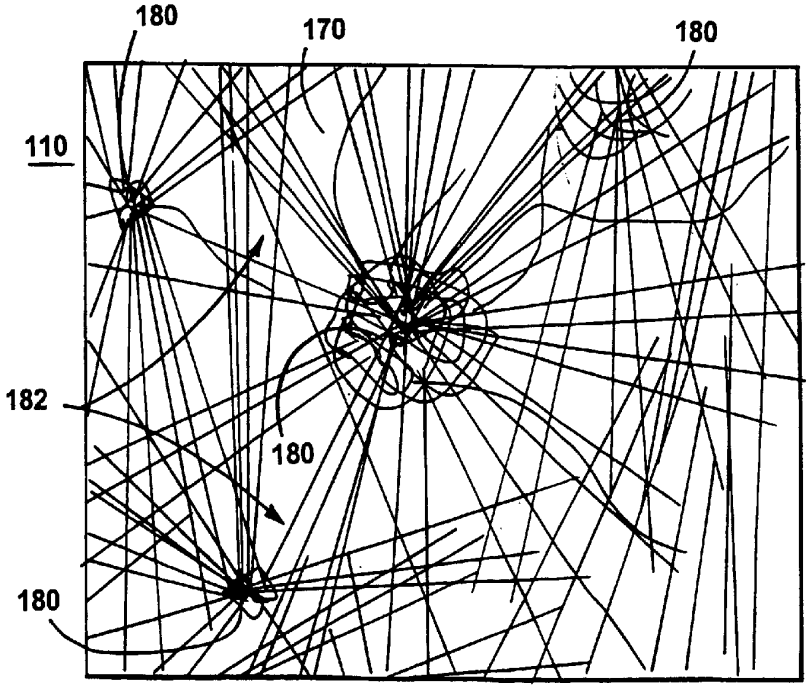

FIG. 2B

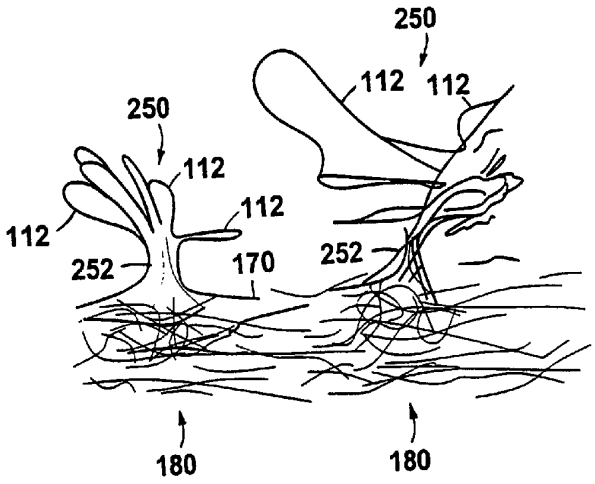

FIG. 2C

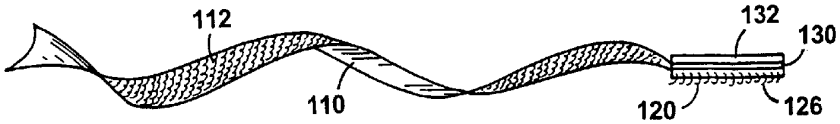

FIG. 3

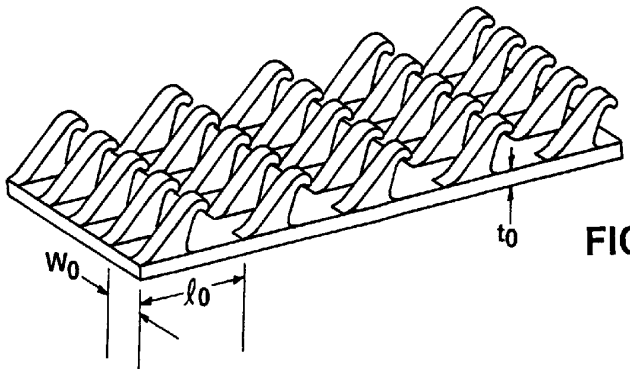

FIG. 4A

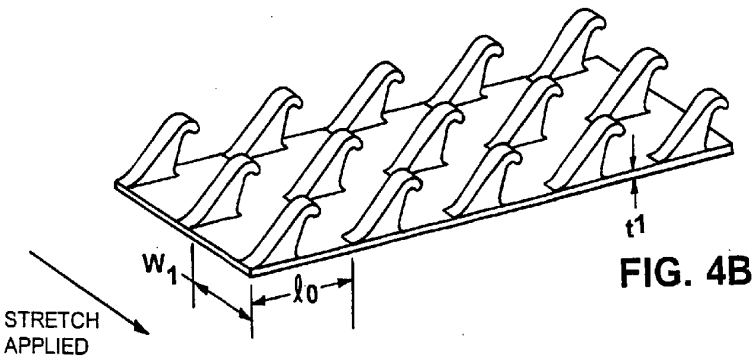

FIG. 4B

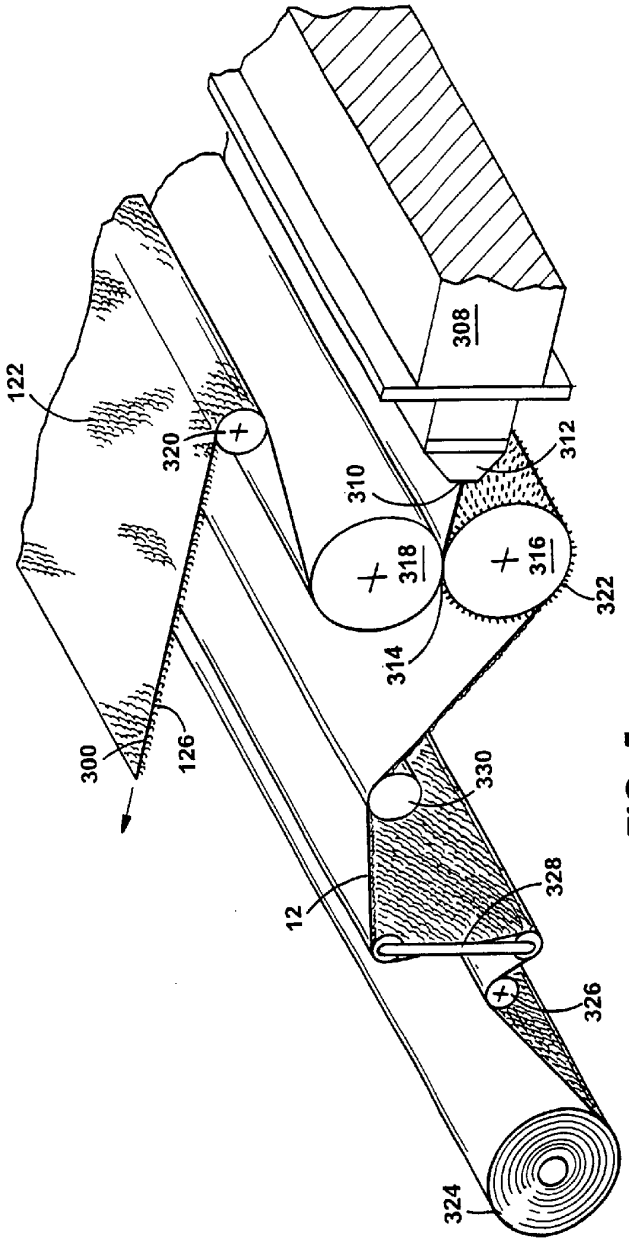

FIG. 5

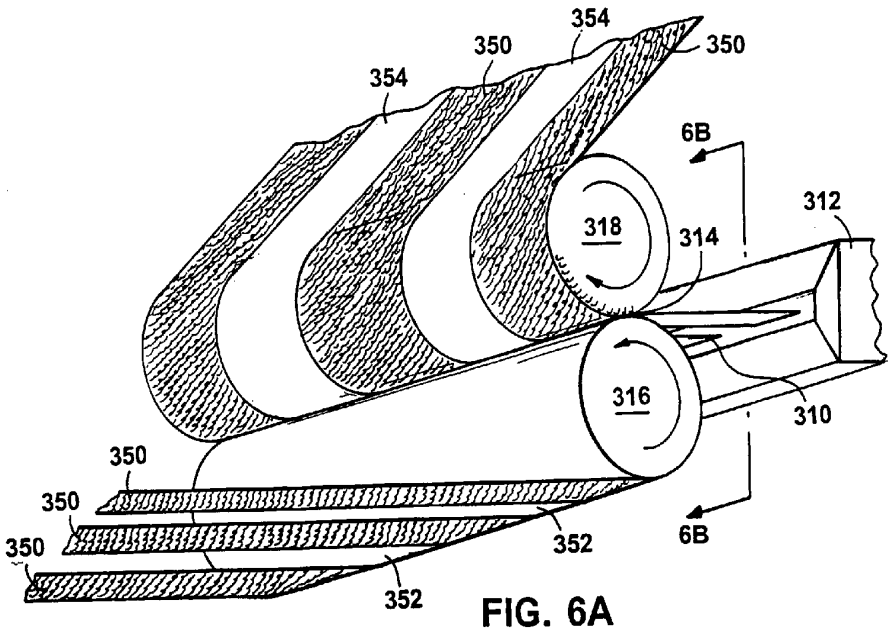
354
350
350
354
6B
312
318
314
316
310
350
350
350
352
352
6B

FIG. 6A

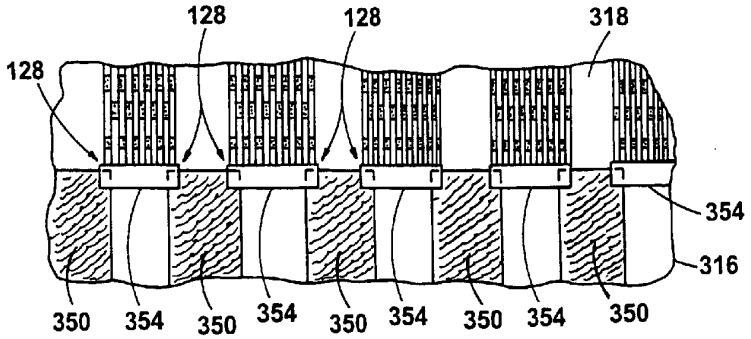
128
128
318
128
354
316
350
354
350
354
350
354
350
354
350

FIG. 6B

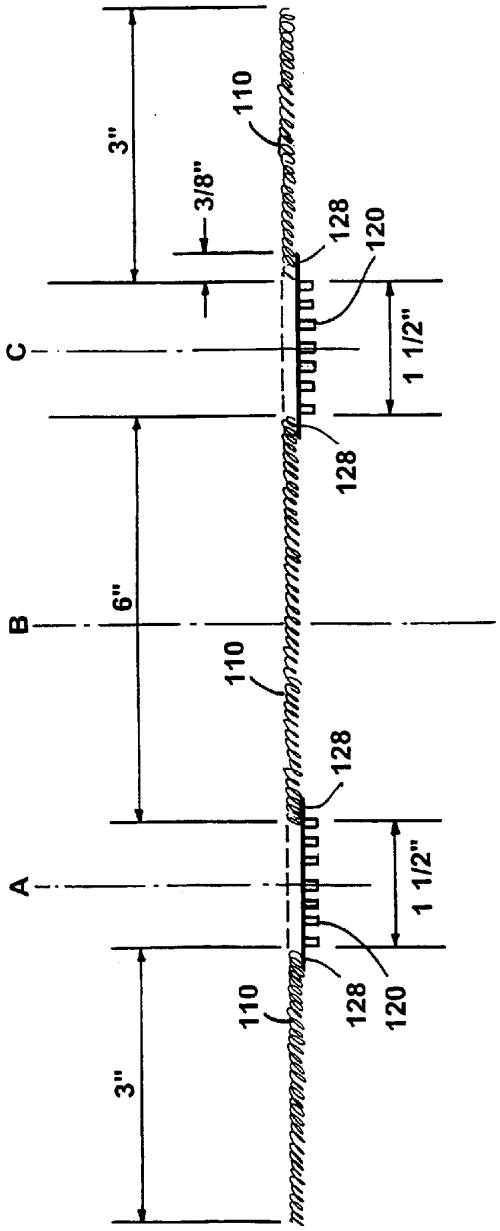

FIG. 7

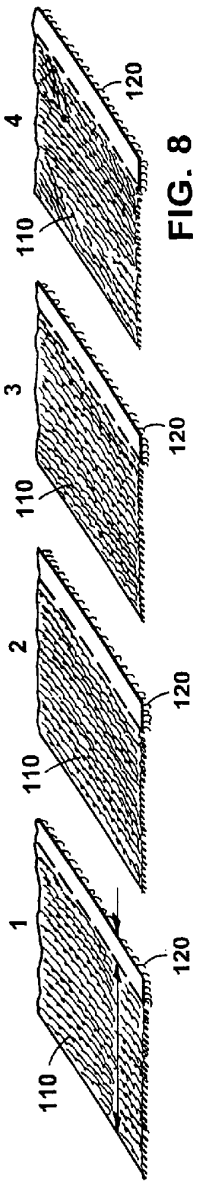

FIG. 8

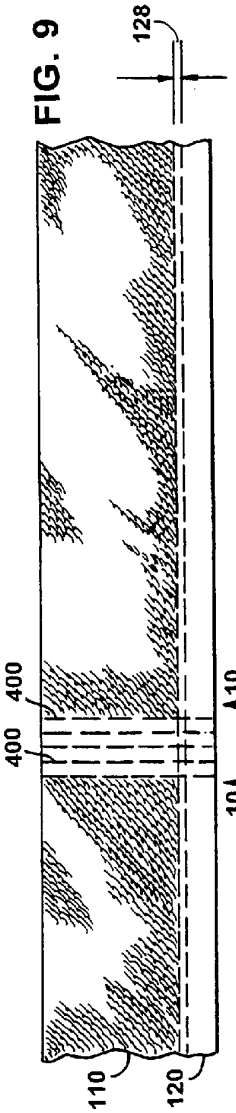

FIG. 9

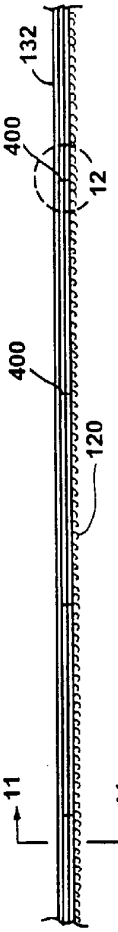

FIG. 10

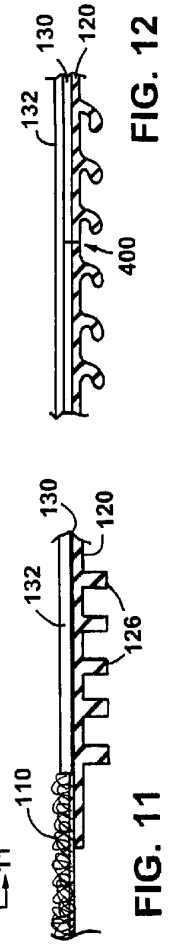

FIG. 11

FIG. 12

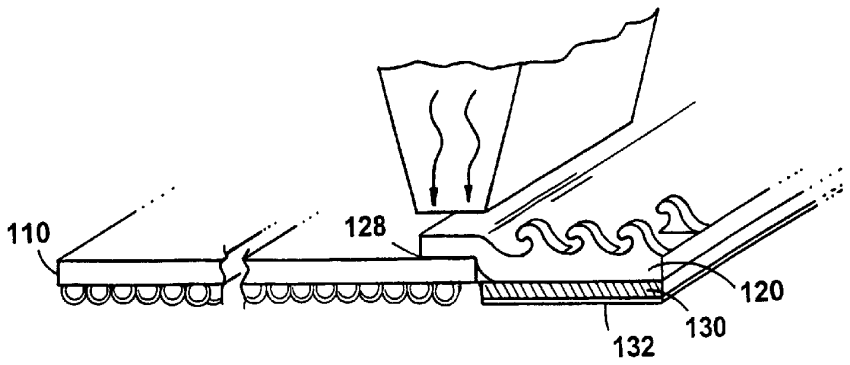

FIG. 13

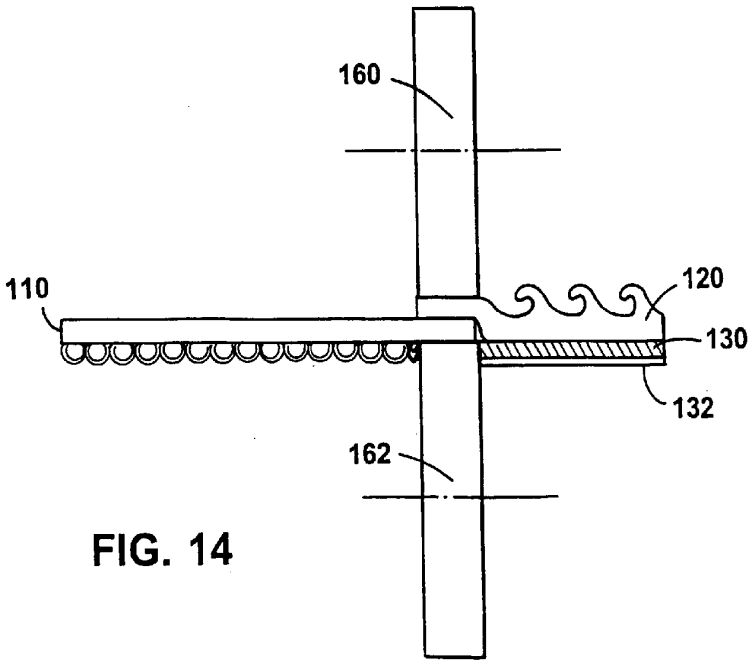

FIG. 14

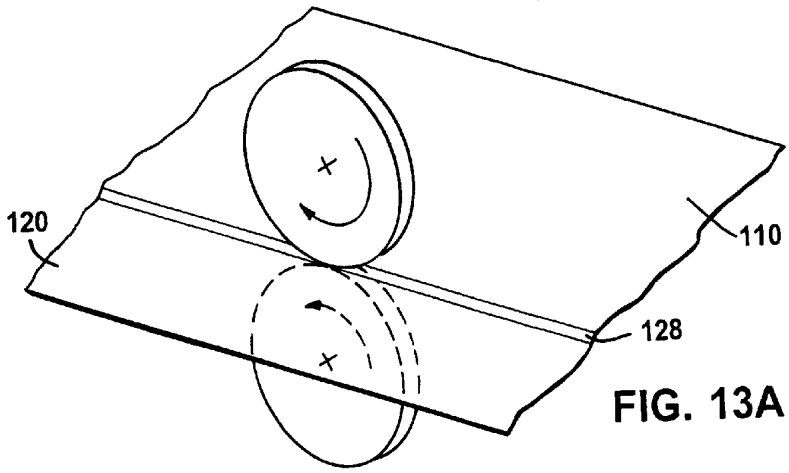

FIG. 13A

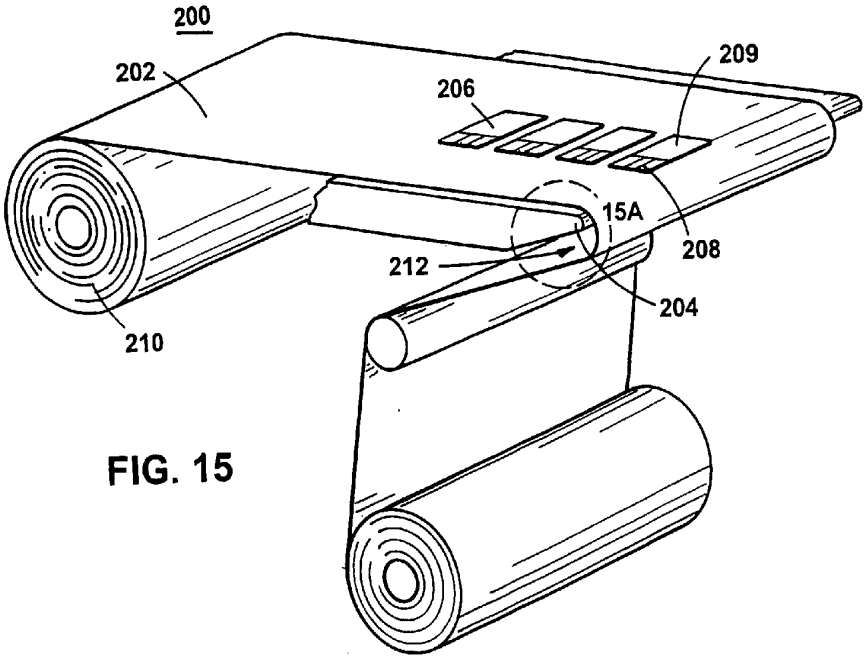

FIG. 15

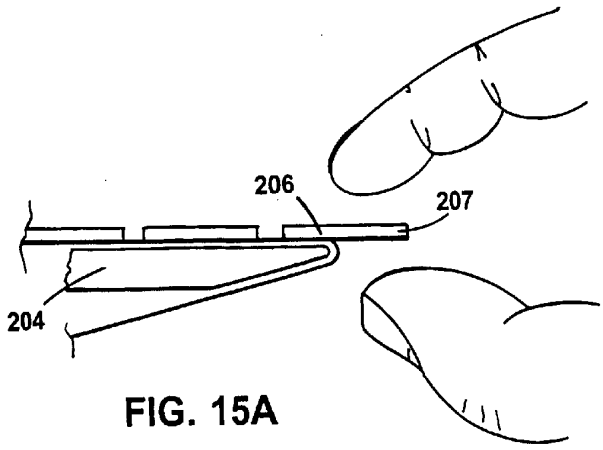

FIG. 15A

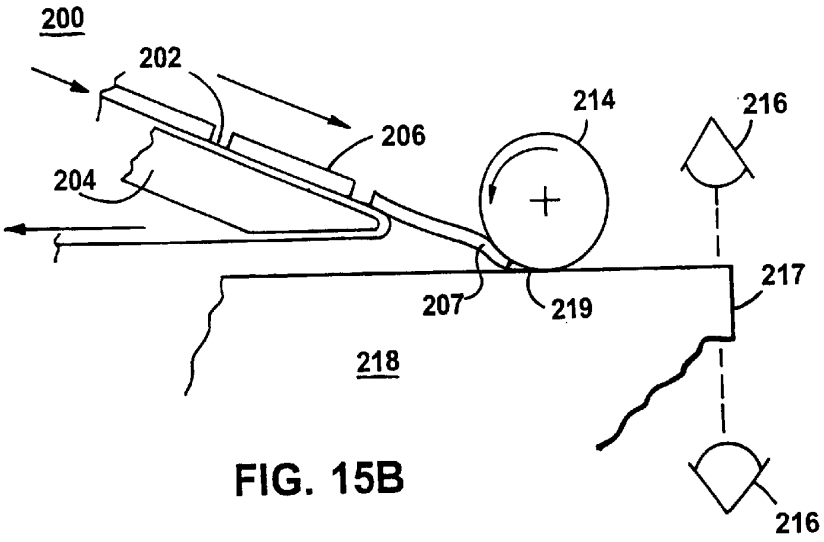

FIG. 15B

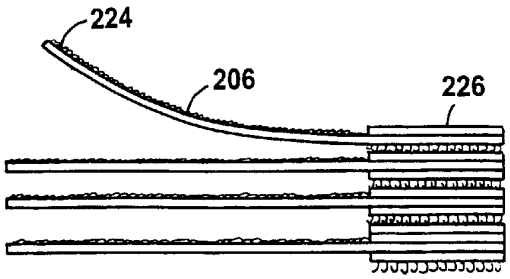

FIG. 16A

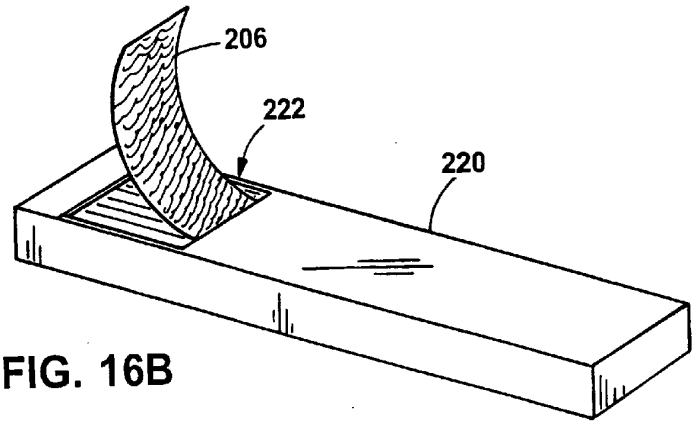

FIG. 16B

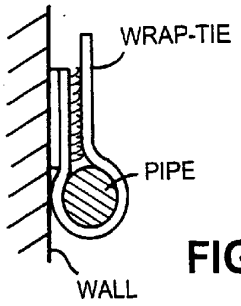

FIG. 17