Innovation, Sciences et Développement économique Canada
Office de la Propriété Intellectuelle du Canada

Innovation, Science and Economic Development Canada
Canadian Intellectual Property Office

CA 2937720 C 2022/05/03

(11)(21) 2 937 720

(12) BREVET CANADIEN
CANADIAN PATENT

(13) C

(86) Date de dépôt PCT/PCT Filing Date: 2015/01/30
(87) Date publication PCT/PCT Publication Date: 2015/08/06
(45) Date de délivrance/Issue Date: 2022/05/03
(85) Entrée phase nationale/National Entry: 2016/07/22
(86) N° demande PCT/PCT Application No.: GB 2015/050219
(87) N° publication PCT/PCT Publication No.: 2015/114348
(30) Priorité/Priority: 2014/01/30 (GB1401557.2)

(51) Cl.Int./Int.Cl. *E03B 7/07* (2006.01), *E03C 1/10* (2006.01), *E03C 1/122* (2006.01), *E03C 1/288* (2006.01), *F24D 19/08* (2006.01)

(72) Inventeur/Inventor:
ARMSTRONG, RUSSELL WINSTON, GB

(73) Propriétaire/Owner:
ARMSTRONG, RUSSELL WINSTON, GB

(74) Agent: ROWAND LLP

(54) Titre : DISPOSITIF DE PLOMBERIE
(54) Title: PLUMBING DEVICE

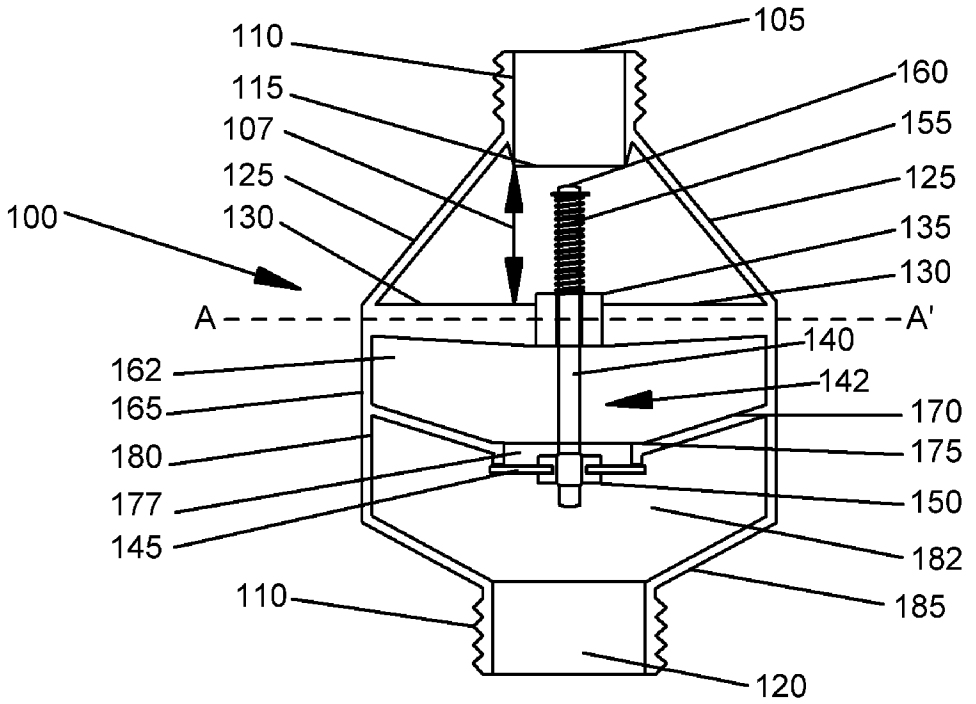

(57) Abrégé/Abstract:
The invention provides a connector (100) comprising an inlet (105) connector, a chamber having an open upper chamber (162) and a lower closable chamber (182), and an outlet connector (120) formed in a floor (185) of the lower chamber wherein the inlet (105) connector is supported above the open upper chamber (162) by one or more arms (125) and wherein the lower chamber (182) is closable by a valve (142) which is arranged to open at a preselected pressure.

(12) INTERNATIONAL APPLICATION PUBLISHED UNDER THE PATENT COOPERATION TREATY (PCT)

(19) World Intellectual Property Organization
International Bureau

(43) International Publication Date
6 August 2015 (06.08.2015)

WIPO | PCT

(10) International Publication Number
WO 2015/114348 A1

(51) International Patent Classification:
E03B 7/07 (2006.01) *E03C 1/10* (2006.01)
E03C 1/122 (2006.01) *E03C 1/288* (2006.01)
F24D 19/08 (2006.01)

(21) International Application Number:
PCT/GB2015/050219

(22) International Filing Date:
30 January 2015 (30.01.2015)

(25) Filing Language: English

(26) Publication Language: English

(30) Priority Data:
1401557.2 30 January 2014 (30.01.2014) GB

(72) Inventor; and
(71) Applicant : **ARMSTRONG, Russell Winston** [GB/GB]; 10 Cordelia Way, Chellaston, Derbyshire DE73 5AR (GB).

(74) Agent: **PEEL, James Peter**; J. P. Peel & Co Ltd, Gainsborough House, 2 Sheen Road, Richmond, Surrey TW9 1AE (GB).

(81) Designated States *(unless otherwise indicated, for every kind of national protection available)*: AE, AG, AL, AM, AO, AT, AU, AZ, BA, BB, BG, BH, BN, BR, BW, BY, BZ, CA, CH, CL, CN, CO, CR, CU, CZ, DE, DK, DM, DO, DZ, EC, EE, EG, ES, FI, GB, GD, GE, GH, GM, GT, HN, HR, HU, ID, IL, IN, IR, IS, JP, KE, KG, KN, KP, KR, KZ, LA, LC, LK, LR, LS, LU, LY, MA, MD, ME, MG, MK, MN, MW, MX, MY, MZ, NA, NG, NI, NO, NZ, OM, PA, PE, PG, PH, PL, PT, QA, RO, RS, RU, RW, SA, SC, SD, SE, SG, SK, SL, SM, ST, SV, SY, TH, TJ, TM, TN, TR, TT, TZ, UA, UG, US, UZ, VC, VN, ZA, ZM, ZW.

(84) Designated States *(unless otherwise indicated, for every kind of regional protection available)*: ARIPO (BW, GH, GM, KE, LR, LS, MW, MZ, NA, RW, SD, SL, ST, SZ, TZ, UG, ZM, ZW), Eurasian (AM, AZ, BY, KG, KZ, RU, TJ, TM), European (AL, AT, BE, BG, CH, CY, CZ, DE, DK, EE, ES, FI, FR, GB, GR, HR, HU, IE, IS, IT, LT, LU, LV, MC, MK, MT, NL, NO, PL, PT, RO, RS, SE, SI, SK, SM, TR), OAPI (BF, BJ, CF, CG, CI, CM, GA, GN, GQ, GW, KM, ML, MR, NE, SN, TD, TG).

Published:
— *with international search report (Art. 21(3))*

(54) Title: PLUMBING DEVICE

Figure 1

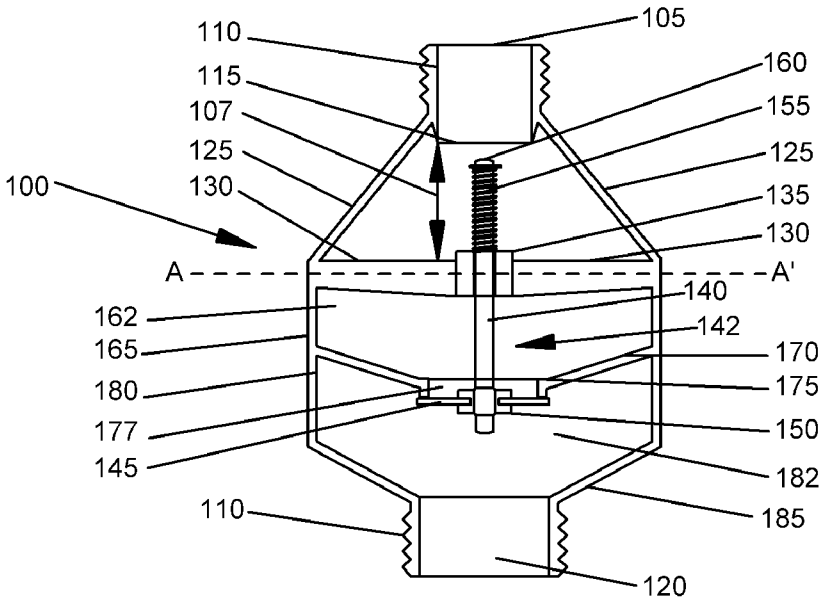

(57) Abstract: The invention provides a connector (100) comprising an inlet (105) connector, a chamber having an open upper chamber (162) and a lower closable chamber (182), and an outlet connector (120) formed in a floor (185) of the lower chamber wherein the inlet (105) connector is supported above the open upper chamber (162) by one or more arms (125) and wherein the lower chamber (182) is closable by a valve (142) which is arranged to open at a preselected pressure.

WO 2015/114348 A1

PLUMBING DEVICE

[001] The present invention relates to a plumbing device which allows a pressure and/or temperature relief valve for a fresh water system to be connected to a waste pipe or soil stack without the risk of back contamination.

[002] An example of the use of a relief valve is with an unvented domestic hot water storage system (UVHWSS) or unvented hot water heater (UVHWH). Such a system typically has a temperature and/or pressure relief valve connected to a discharge pipe. The regulations for connection of the discharge pipe to a waste water system are strict because of the risk of back contamination from the pathogenic water in the waste water system to the fresh water in the storage system. Typically, the regulations require a tundish to provide a visible point of discharge and an air gap (to provide backflow prevention) and the outflow from the tundish to be connected in a particular way to discharge above an external ground floor gulley. Such a connection requires careful engineering and is expensive to install.

[003] In order to connect the vent valve to a soil stack within a building, arrangements need to be made to provide an odour trap to prevent any foul gases from the soil stack from entering the domestic location. On most domestic installations, a water trap would be used to prevent escape of gases and odours from the soil stack. Typically, a water trap comprises a bended tube in which water is trapped. A water trap allows passage of liquid and suspended solids but not gases. Generally speaking, a water trap is not suitable for use with a tundish as it will become ineffective through drying out. A water trap is also relatively bulky and is not suitable for use in all locations.

[004] More recently, a product has been approved which provides an odour trap which allows the discharge pipe to be connected to a soil stack within a building. This product is designed to be used in association with a tundish and is not easy to use with an UVHWH because of its overall length..

[005] A way of ameliorating these problems has been sought.

[006] According to the invention, there is provided a connector which connector comprises a chamber having an open upper chamber and a lower closable chamber, an inlet connector, an outlet connector formed in a floor of the lower chamber wherein the inlet connector is supported above the open upper chamber by one or more arms and wherein the lower chamber is closable by a non-return valve which is arranged to open at a pre-selected pressure.

[007] The advantages of the connector according to the invention include that as it is an adapted tundish, it is compact and space saving such that it can be used in a restricted location such as with an under counter water heater. Its simple construction enables it to have a rating for temperatures up to 100°C.

[008] In some embodiments, the pre-selected pressure is a pressure applied by a flow of liquid from the inlet such as may be produced by a pressure and/or temperature relief valve in operation. For example, the pre-selected pressure may be sufficiently high to prevent accidental opening of the non-return valve (for example due to dust or condensation on the valve) but not so high to restrict flow of liquid from the inlet such that liquid overflows from the open upper chamber. A skilled person would be able to determine a suitable pressure.

[009] In some embodiments, the chamber has a tubular middle chamber arranged between the upper chamber and the closable lower chamber. In some embodiments, the pre-selected pressure is no more than the pressure from a volume of liquid which can fill the tubular middle chamber. The advantages of the middle chamber include that it reduces the risk of accidental opening of the non-return valve by providing a receptacle for collection of liquid; and that the presence of a non-return valve in a tundish does not interfere with the operation of the tundish because the risk of spillage of liquid from the tundish is reduced.

[0010] In some embodiments, the valve may be a non-return valve, for example a diaphragm check valve, a lift valve or a duck bill valve.

[0011] In some embodiments, the valve is a lift valve having a valve stem. In some embodiments, the upper chamber provides one or more ribs to support a valve guide for the valve stem. In some embodiments, the lift valve has a resilient member to bias it into a closed position. In some embodiments, the resilient member is arranged on the lift valve above the valve guide. Provision of a resilient member above the valve guide has the advantage of enabling the valve stem to be self-guiding such that only one valve guide is required.

[0012]

[0013] The invention will now be illustrated with reference to the following Figures of the accompanying drawings which are not intended to limit the scope of the invention claimed:

FIGURE 1 shows a schematic vertical cross-sectional view of a first embodiment of the invention;

FIGURE 2 shows a schematic overhead plan view of the first embodiment of the invention;

FIGURE 3 shows a schematic horizontal cross-sectional view of the first embodiment of the invention taken along line marked A-A' on Figure 1;

FIGURE 4 shows a schematic vertical cross-sectional view of a second embodiment of the invention;

FIGURE 5 shows a schematic overhead plan view of the second embodiment of the invention;

FIGURE 6 shows a a schematic vertical cross-sectional view of a third embodiment of the invention;

FIGURE 7 shows a schematic overhead plan view of the second embodiment of the invention.

[0014] A first embodiment of a connector according to the invention indicated generally at 100 is shown in Figures 1, 2 and 3. Connector 100 has an inlet 105, an upper chamber 162, a middle chamber 177, a lower chamber 182 and a lift valve indicated at 142.

[0015] Inlet 105 is supported above upper chamber 162 by a pair of diametrically opposed arms 125 such that a vertical gap 107 is formed between the inlet and the upper chamber 162. Inlet 105 has an outer thread 110 for engaging with a tap connector (or other pipe fitting) and forms a tapered beak drip 115 which projects downwards into the vertical gap 107. Arms 125 are arranged so that the vertical gap 107 is of a height sufficient to provide an air gap of type AA which is typically at least about 20mm.

[0016] Upper chamber 162 is shaped by circumferential upper chamber wall 165 and a shelving upper chamber floor 170. Upper chamber 162 has an open mouth for receiving liquid from the inlet. The upper chamber wall 165 supports arms 125. Upper chamber floor 170 forms upper chamber floor opening 175 which is the opening to tubular middle chamber 177 such that upper chamber floor 170 has an inverted truncated conical shape and such that the upper chamber floor 170 has a funnel shape for directing liquid to the upper chamber floor opening 175. Upper chamber wall 165 has three inwardly projecting ribs 130 which support valve guide 135 which is arranged in the centre of the opening to upper chamber 162.

[0017] The lift valve 142 has the following components: a valve stem 140, a valve disc 145, a valve disc fixing 150, a valve spring 155 and a valve spring clip 160. The valve stem 140 is arranged to run through valve guide 135. At an upper part of the valve stem 140 above the valve guide 135, valve spring 155 is arranged on the valve stem 140 and secured to an upper end of the valve stem 140 by valve spring clip 160. At a lower end of the valve stem 140, the valve disc 145 is secured by valve disc fixing 150. Valve disc 145 is formed from a resilient material such as a plastics or rubber material, for example EPDM rubber. In an alternative embodiment, the valve spring 155 may be replaced by a suitable resilient member as would be known to a person of skill in the art.

[0018] The tubular middle chamber 177 has a lower opening which forms a valve seat for lift valve 142 and which lower opening is normally closed by valve disc 145 which is biased by the valve spring 155 into that position. The valve spring 155 is arranged to open the lift valve 142 at a pre-selected pressure on the valve disc 145. A suitable pre-selected pressure may be that determined by when the tubular middle chamber 177 is full of liquid.

[0019] The lower chamber 182 has a ceiling 170,177, a tubular lower chamber wall 180 and a shelving lower chamber floor 185. The ceiling 170,177 of the lower chamber 182 is formed by the upper chamber floor 170 and middle chamber 177 and forms an opening which is normally closed by valve 142. Lower chamber floor 185 shelves to form an opening for outlet 120 such that lower chamber floor 185 has an inverted truncated conical shape and such that the lower chamber floor 185 has a funnel shape for directing liquid to outlet 120. Outlet 120 has a tubular shape and has an outer thread 110 for engaging with a tap connector (or other pipe fitting).

[0020] In an alternative embodiment, the diameter of valve disc 145 may be less than that for outlet 120 such that the valve spring 155 and/or valve disc 145 may be replaced by removing valve spring clip 160, allowing the lift valve 142 to drop through outlet 120 and out of the connector 100 so that one or more of the components of lift valve 142 may be replaced.

[0021] A second embodiment of a connector according to the invention indicated generally at 200 is shown in Figures 4 and 5. Connector 200 has an inlet 205, an upper chamber 262, a middle chamber 277, a lower chamber 282 and a diaphragm check valve 290. The numbering of the reference numerals for features of the second embodiment corresponds to that for like features of the first embodiment.

[0022] Inlet 205 is supported above upper chamber 262 by a pair of diametrically opposed arms 225 such that a vertical gap 207 is formed between the inlet and the upper chamber 262. Inlet 205 has an outer thread 210 for engaging with a tap connector (or other pipe fitting)and forms a

tapered beak drip 215 which projects downwards into the vertical gap 207. Arms 225 are arranged so that the vertical gap 207 is of a height sufficient to provide an air gap of type AA which is typically at least about 20mm.

[0023] Upper chamber 262 is shaped by circumferential upper chamber wall 265 and a shelving upper chamber floor 270. Upper chamber 262 has an open mouth for receiving liquid from the inlet. The upper chamber wall 265 supports arms 225. Upper chamber floor 270 forms upper chamber floor opening 275 which is the opening to tubular middle chamber 277 such that upper chamber floor 270 has an inverted truncated conical shape and such that the upper chamber floor 270 has a funnel shape for directing liquid to the upper chamber floor opening 275. The features of the upper part of connector 200 are shown in the overhead plan view depicted in Figure 5.

[0024] Diaphragm check valve 290 is formed from a resilient material and is shaped to be biased into a closed position. Diaphragm check valve 290 is shown in an open position by a partially occluded form shown on Figure 4. The tubular middle chamber 277 has a lower opening which forms a valve seat for lift valve 142 and which lower opening is normally closed by the diaphragm check valve 290. The diaphragm check valve 290 is attached the lower opening of middle chamber 277. The diaphragm check valve 290 is arranged to open at a pre-selected pressure. A suitable pre-selected pressure may be that determined by when the tubular middle chamber 277 is full of liquid.

[0025] The lower chamber 282 has a ceiling 270,277, a tubular lower chamber wall 280 and a shelving lower chamber floor 285. The ceiling 270,277 of the lower chamber 282 is formed by the upper chamber floor 270 and middle chamber 277 and forms an opening which is normally closed by diaphragm check valve 290. Lower chamber floor 285 shelves to form an opening for outlet 220 such that lower chamber floor 285 has an inverted truncated conical shape and such that the lower chamber floor 285 has a funnel shape for directing liquid to outlet 220. Outlet 220 has a tubular shape and has an outer thread 210 for engaging with a tap connector (or other pipe fitting).

[0026] A third embodiment of a connector according to the invention indicated generally at 300 is shown in Figure 6. Connector 300 has an inlet 305, an upper chamber 362, a middle chamber 377, a lower chamber 382 and a duck bill valve 395. The numbering of the reference numerals for features of the third embodiment corresponds to that for like features of the first and second embodiments.

[0027] Inlet 305 is supported above upper chamber 362 by a pair of diametrically opposed arms 325 such that a vertical gap 307 is formed between the inlet and the upper chamber 362. Inlet 305 has an outer thread 310 for engaging with a tap connector (or other pipe fitting) and forms a tapered beak drip 315 which projects downwards into the vertical gap 307. Arms 325 are arranged

so that the vertical gap 307 is of a height sufficient to provide an air gap of type AA which is typically at least about 20mm.

[0028] Upper chamber 362 is shaped by circumferential upper chamber wall 365 and a shelving upper chamber floor 370. Upper chamber 362 has an open mouth for receiving liquid from the inlet. The upper chamber wall 365 supports arms 325. Upper chamber floor 370 forms upper chamber floor opening 375 which is the opening to tubular middle chamber 377 such that upper chamber floor 370 has an inverted truncated conical shape and such that the upper chamber floor 370 has a funnel shape for directing liquid to the upper chamber floor opening 375. The features of the upper part of connector 200 are shown in the overhead plan view depicted in Figure 7.

[0029] Duck bill valve 395 is formed from a resilient material biased to a closed position. Duck bill valve 395 is shown in an open position by the partially occluded form shown on Figure 6. Duck bill valve comprises two downwardly extending, opposed flexible impervious wall members of complementary shapes disposed face to face in surface contact so that there is no through passage between them in their normal state and where they are resiliently urged into the normal state.

[0030] The tubular middle chamber 377 has a lower opening on which the wall members of the duck bill valve 395 are mounted and which lower opening is normally closed by the duck bill valve 395. Liquid at a pre-selected pressure will force the wall members of the duck bill valve 395 apart to permit flow between them from the middle chamber 377 into the lower chamber 382. A suitable pre-selected pressure may be that determined by when the tubular middle chamber 377 is full of liquid. The duck bill valve 395 prevents liquid flow in the opposite direction by the close surface contact between its wall members.

[0031] The lower chamber 382 has a ceiling 370,377, a tubular lower chamber wall 380 and a shelving lower chamber floor 385. The ceiling 370,377 of the lower chamber 382 is formed by the upper chamber floor 370 and middle chamber 377 and forms an opening which is normally closed by diaphragm check valve 390. Lower chamber floor 385 shelves to form an opening for outlet 320 such that lower chamber floor 385 has an inverted truncated conical shape and such that the lower chamber floor 385 has a funnel shape for directing liquid to outlet 320. Outlet 320 has a tubular shape and has an outer thread 310 for engaging with a tap connector (or other pipe fitting).

[0032] A fourth embodiment of a connector according to the invention indicated generally at 400 is shown in Figure 8. Connector 400 has an inlet 405, an upper chamber 462, a middle chamber 477, a lower chamber 482 and a lift valve indicated at 442.

[0033] Inlet 405 is supported above upper chamber 462 by a pair of diametrically opposed arms 425 such that a vertical gap 407 is formed between the inlet and the upper chamber 462. Inlet 405 has an outer thread 410 for engaging with a tap connector (or other pipe fitting) and forms a tapered beak drip 415 which projects downwards into the vertical gap 407. Arms 425 are arranged so that the vertical gap 407 is of a height sufficient to provide an air gap of type AA which is typically at least about 20mm.

[0034] Upper chamber 462 is shaped by circumferential upper chamber wall 465 and a shelving upper chamber floor 470. Upper chamber 462 has an open mouth for receiving liquid from the inlet. The upper chamber wall 465 supports arms 425. Upper chamber floor 470 forms upper chamber floor opening 475 which is the opening to tubular middle chamber 477 such that upper chamber floor 470 has an inverted truncated conical shape and such that the upper chamber floor 470 has a funnel shape for directing liquid to the upper chamber floor opening 475. Upper chamber wall 465 has three inwardly projecting ribs 430A which support valve guide 435A which is arranged in the centre of the opening to upper chamber 462.

[0035] The lower chamber 482 has a ceiling 470,477, a tubular lower chamber wall 480 and a shelving lower chamber floor 485. The ceiling 470,477 of the lower chamber 482 is formed by the upper chamber floor 470 and middle chamber 477 and forms an opening which is normally closed by valve 442. Lower chamber floor 485 shelves to form an opening for outlet 420 such that lower chamber floor 485 has an inverted truncated conical shape and such that the lower chamber floor 485 has a funnel shape for directing liquid to outlet 420. Outlet 420 has a tubular shape and has an outer thread 410 for engaging with a tap connector (or other pipe fitting). Lower chamber wall 480 has three inwardly projecting ribs 430B which support valve guide 435B which is arranged in the centre of lower chamber 482.

[0036] The lift valve 442 has the following components: a valve stem 440, a valve disc 445, a valve disc fixing 450, a valve spring 455 and a valve spring clip 460. The valve stem 440 is arranged to run through valve guides 435A,435B. At a lower part of the valve stem 440 above the valve guide 435B and below valve disc 445, valve spring 455 is arranged on the valve stem 440 and secured to a lower end of the valve stem 440 by valve spring clip 460. In the middle of the valve stem 440, the valve disc 445 is secured by valve disc fixing 450. Valve disc 445 is formed from a resilient material such as a plastics or rubber material, for example EPDM rubber. In an alternative embodiment, the valve spring 455 may be replaced by a suitable resilient member as would be known to a person of skill in the art.

[0037] The tubular middle chamber 477 has a lower opening which forms a valve seat for lift valve 442 and which lower opening is normally closed by valve disc 445 which is biased by the valve spring 455 into that position. The valve spring 455 is arranged to open the lift valve 442 at a pre-selected pressure on the valve disc 445. A suitable pre-selected pressure may be that determined by when the tubular middle chamber 477 is full of liquid.

[0038] In an alternative embodiment, the three inwardly projecting ribs 430A and valve guide 435A may be removed such that the valve stem 440 is only supported by valve guide 435B.

CLAIMS

1. A connector comprising an inlet connector, a chamber having an open upper chamber and a lower closable chamber, and an outlet connector formed in a floor of the lower chamber wherein the inlet connector is supported above the open upper chamber by a plurality of horizontally spaced arms such that a vertical gap is formed between the inlet and the upper chamber, the arms being arranged so that the horizontal spacing between the arms and the vertical gap are sufficient to provide an air gap to drain, and wherein the lower chamber is closable by a non-return valve which is arranged to open at a pre-selected pressure.

2. A connector as defined in Claim 1 wherein the chamber has a tubular middle chamber arranged between the upper chamber and the closable lower chamber.

3. A connector as defined in Claim 2 wherein the pre-selected pressure is no more than the pressure from a volume of liquid which can fill the tubular middle chamber.

4. A connector as defined in any one of Claims 1 to 3, wherein the valve is a non-return valve.

5. A connector as defined in any one of Claims 1 to 4, wherein the valve is a lift valve having a valve stem.

6. A connector as defined in Claim 5 wherein the upper chamber provides one or more ribs to support a valve guide for the valve stem.

7. A connector as defined in any one of Claims 4 to 6 wherein the lift valve has a resilient member to bias it into a closed position.

8. A connector as defined in Claim 7, wherein the resilient member is arranged on the lift valve above the valve guide.

9. A connector as defined in Claim 7 or Claim 8 wherein the resilient member is secured on the lift valve by a removable clip.

10. A connector as defined in any one of Claims 1 to 9, wherein the connector is a plumbing device.

Date Reçue/Date Received 2021-05-13

11. A connector as defined in any one of Claims 1 to 10, wherein the arms are arranged so that the horizontal spacing between the arms and the vertical gap are sufficient to provide an air gap to drain such that the connector provides an adapted tundish.

12. A connector as defined in Claim 4, wherein the non-return valve is a diaphragm check valve, a lift valve or a duck bill valve.

13. A connector as defined in Claim 9, wherein the lift valve has a valve disc with a diameter less than the diameter of the outlet such that one or more components of the lift valve may be replaced.

Date Reçue/Date Received 2021-05-13

Figure 1

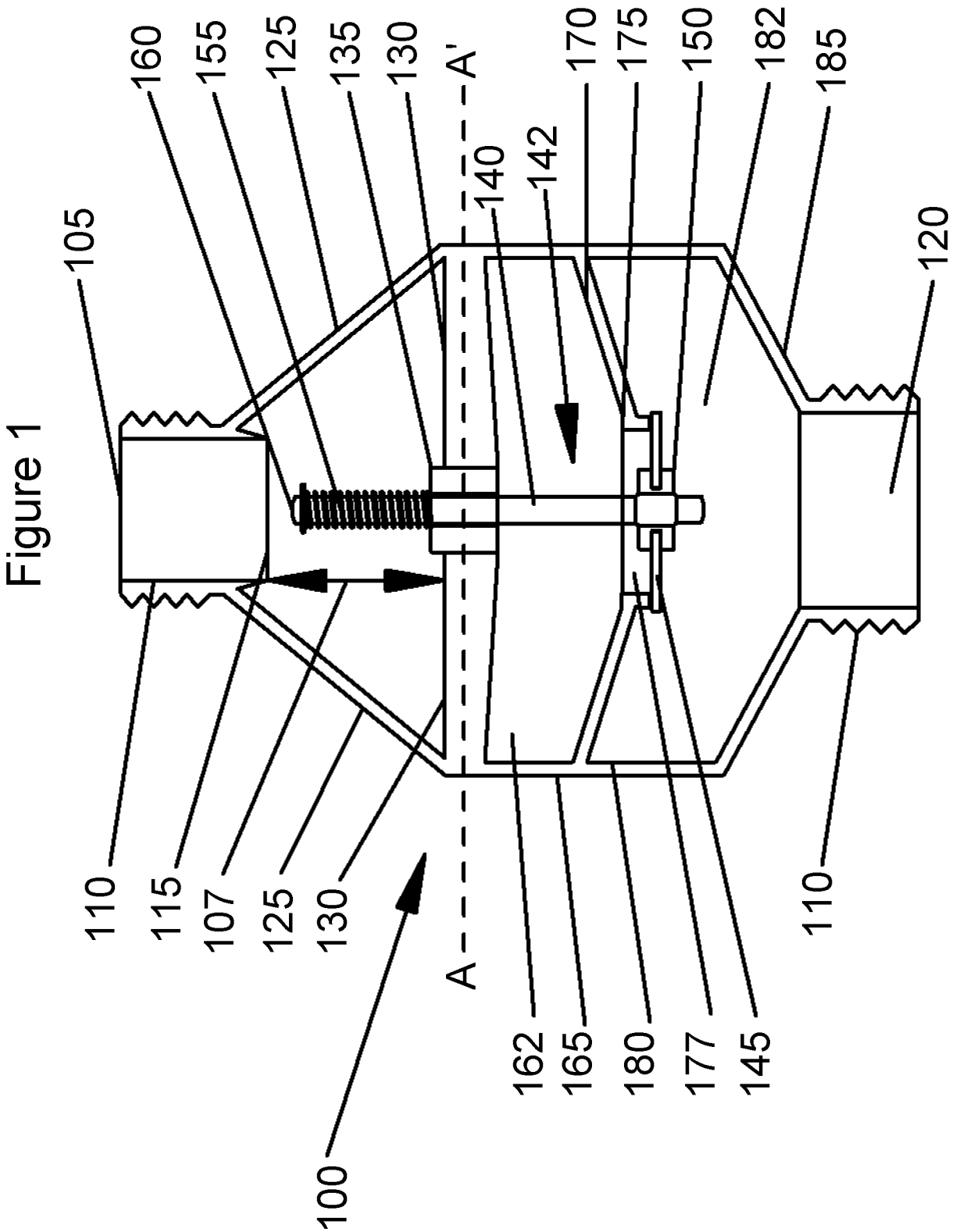
160
155
125
135
130
A'
170
175
150
182
185
105
140
142
120
110
115
107
125
130
A
162
165
180
177
145
110
100

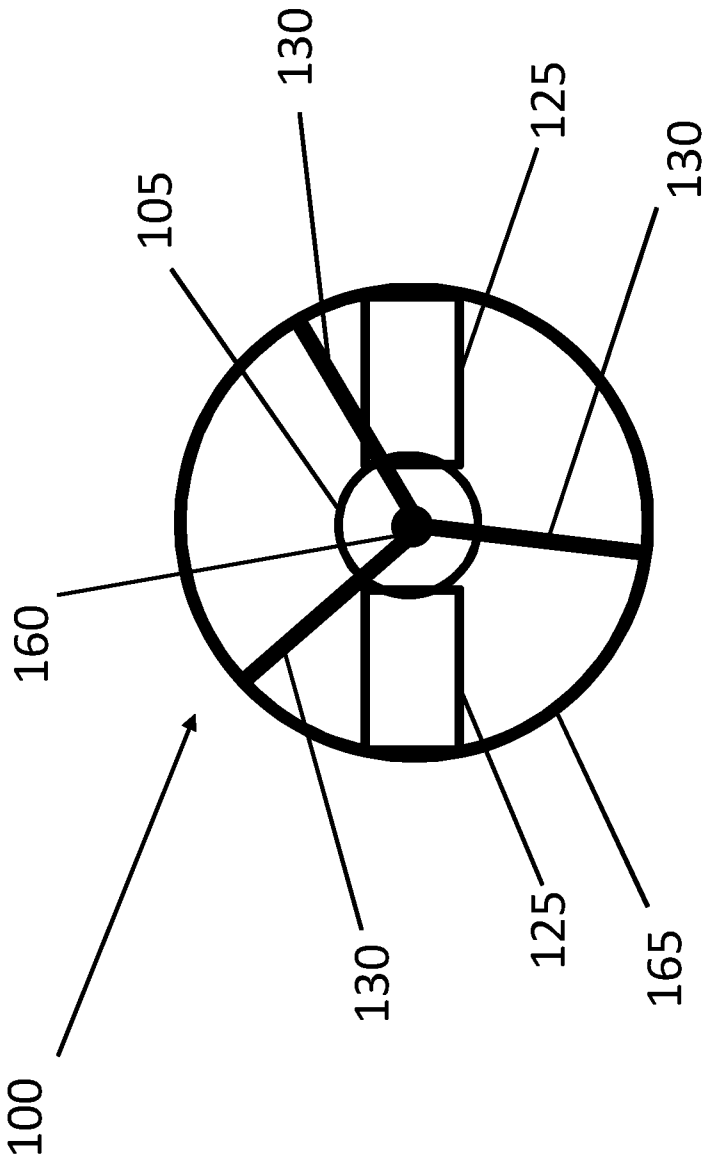

Figure 2

Figure 3

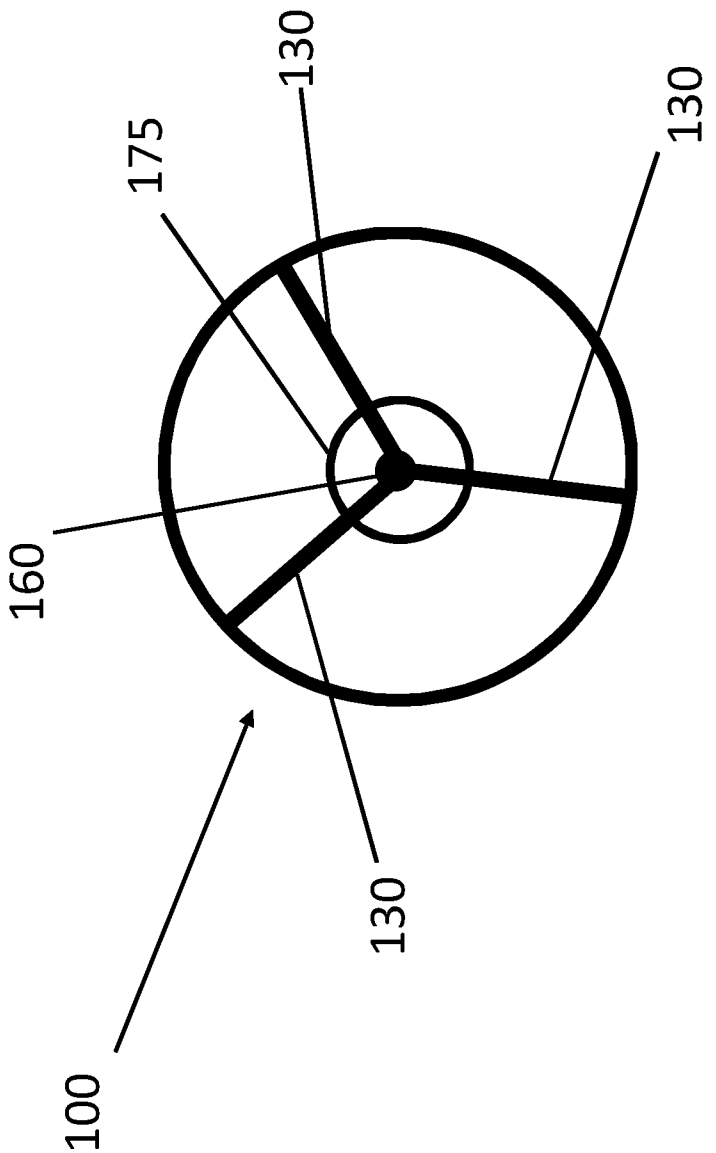

Figure 4

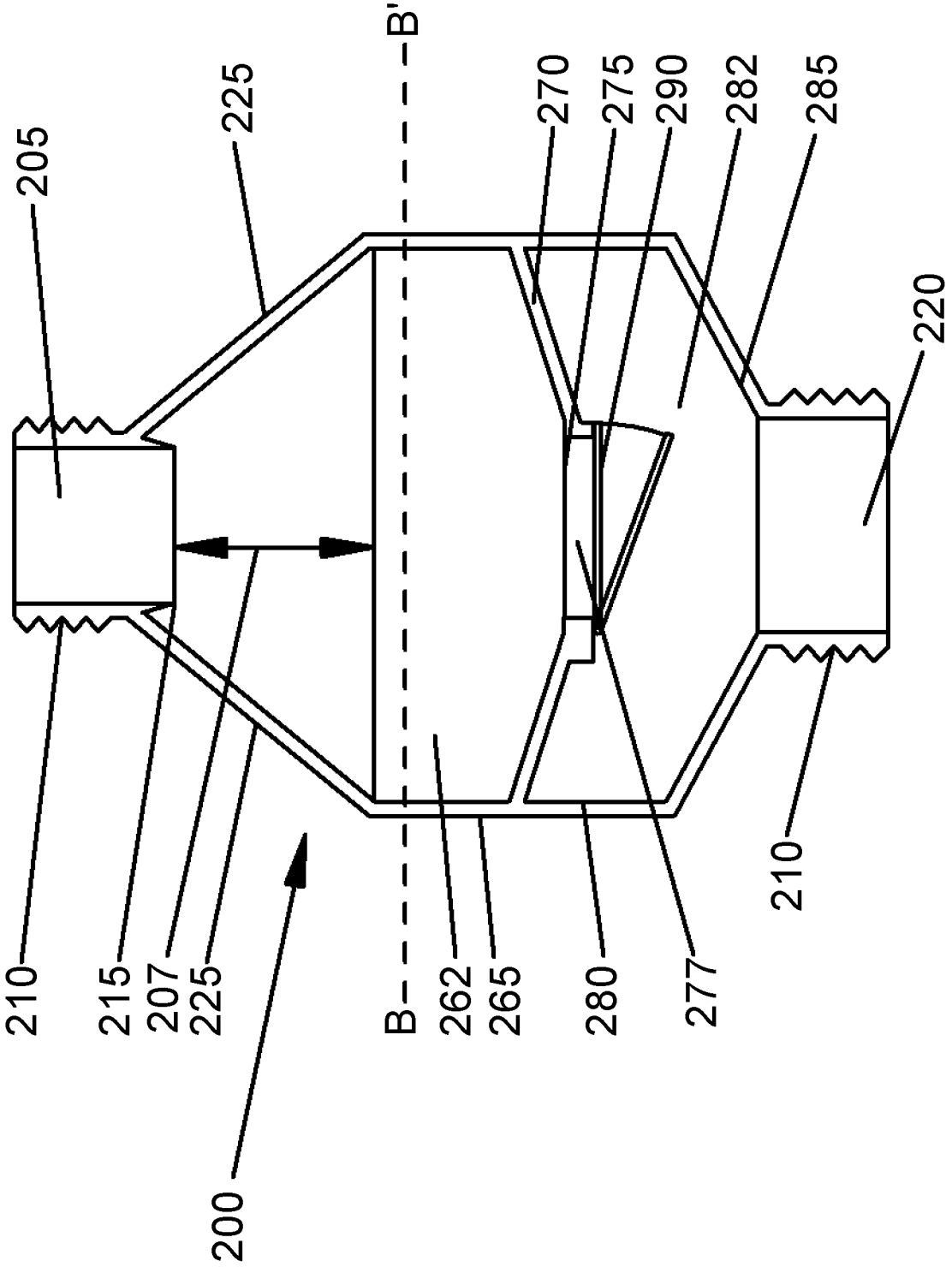
205
225
B'
270
275
290
282
285
220
210
215
207
225
B
262
265
280
277
210
200

Figure 5

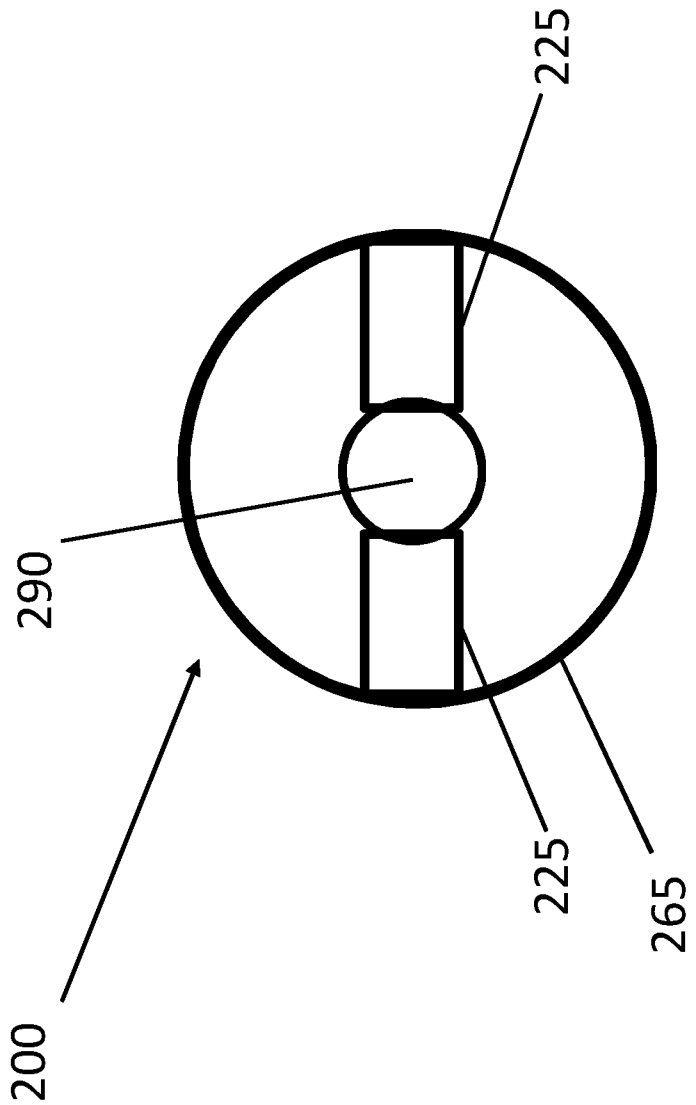

Figure 6

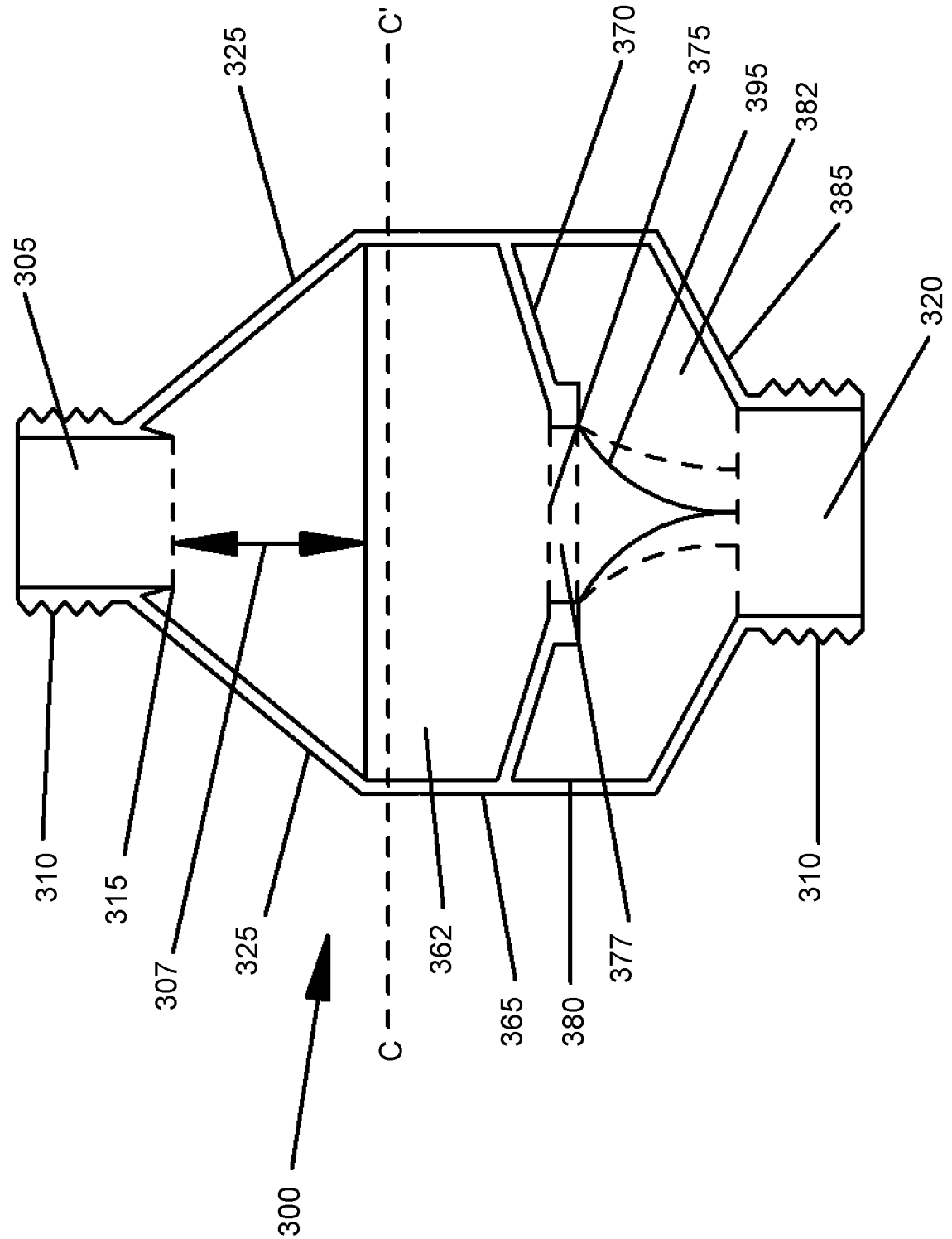
325
C'
370
375
395
382
385
305
320
310
315
307
325
362
365
380
377
310
C
300

Figure 7

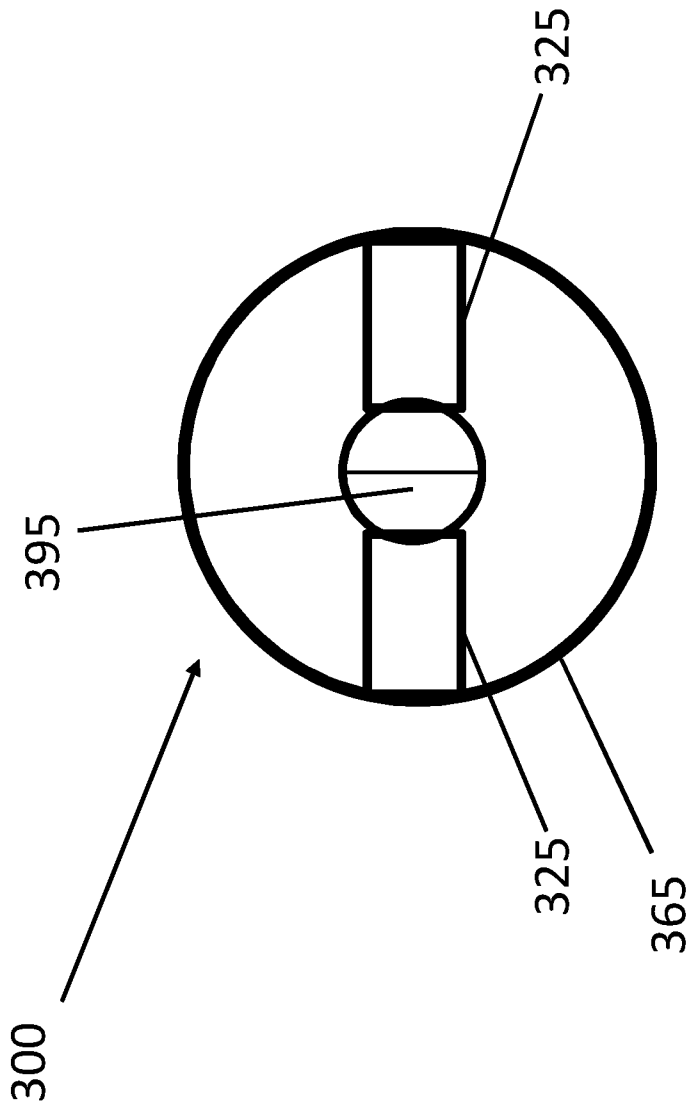

Figure 8

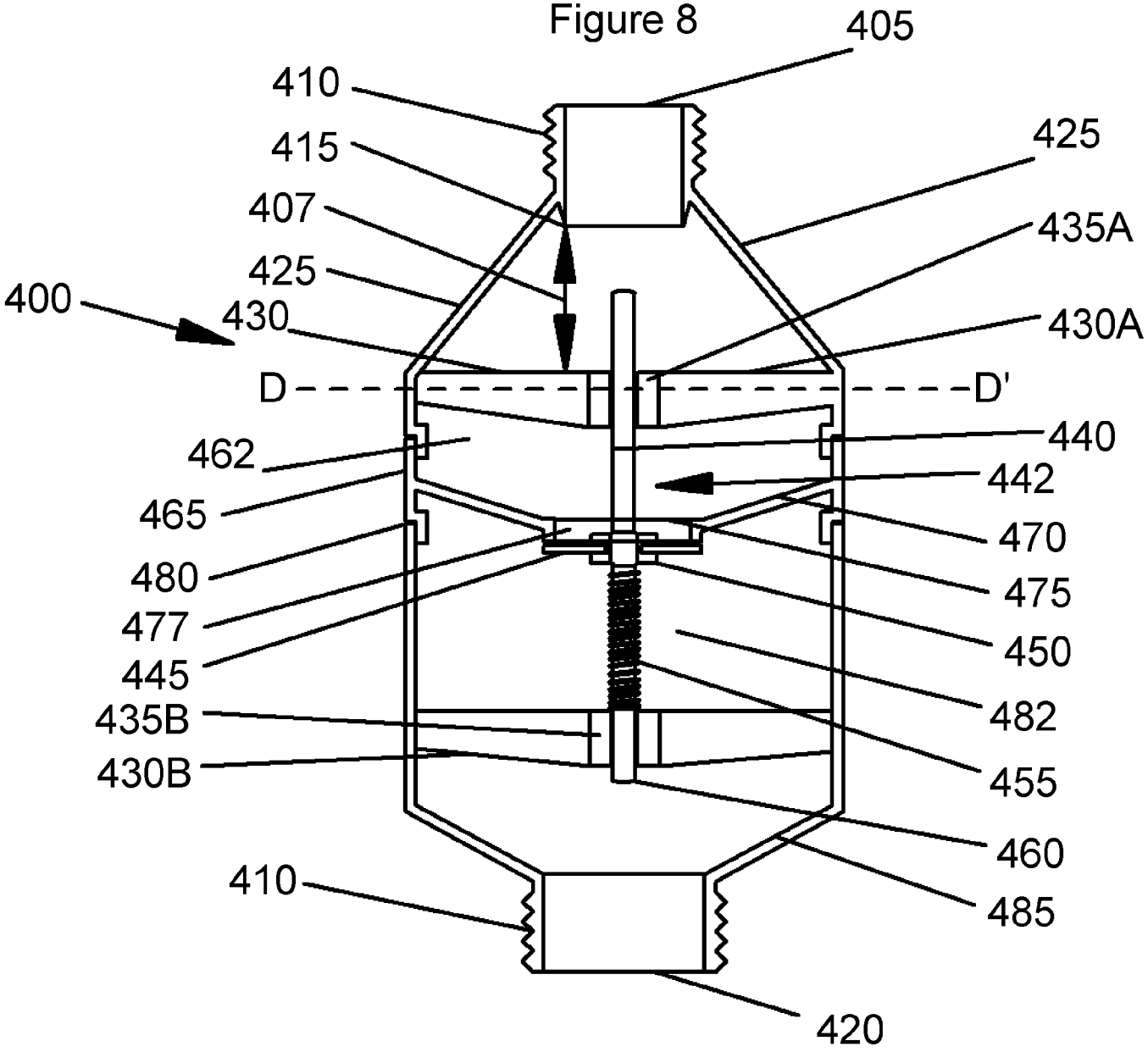
405
410
415
407
425
400
430
425
435A
430A
D
D'
462
440
442
465
470
480
475
477
450
445
482
435B
455
430B
460
485
410
420

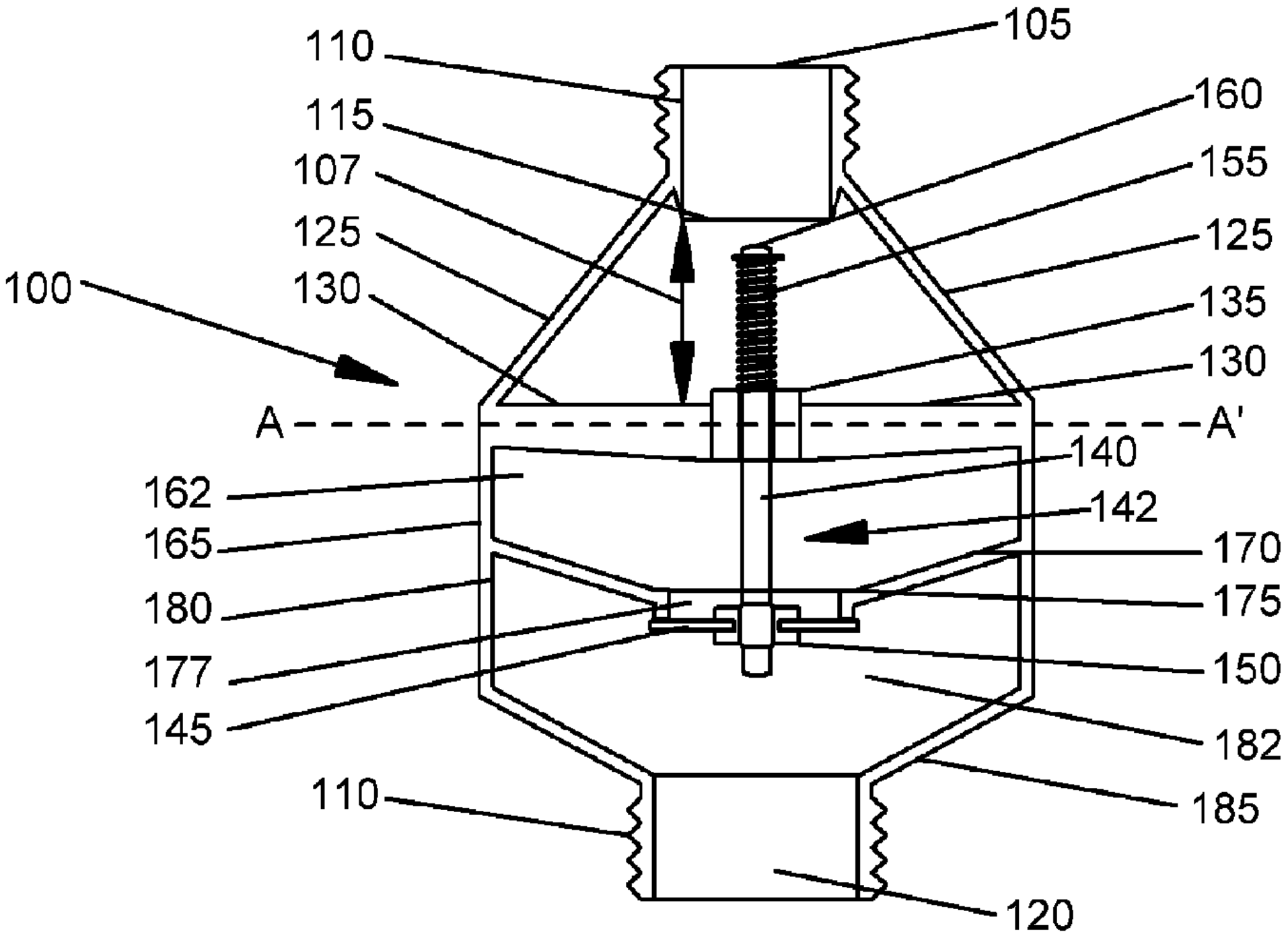
105
110
160
115
155
107
125
125
100
130
135
130
A
A'
140
162
142
165
170
180
175
177
150
145
182
110
185
120